AquaFlush®, AquaVantage®, and MetroVantage®

Connected ZEMS Series

Sensor-Operated Flushometer for Water Closets and Urinals

Installation, Operation, Maintenance, and Parts Manual

ZEMS6000-W1
ZEMS6000AV-W1

ZEMS6003-W1
ZEMS6003AV-W1

ZEMS6200-W1

ZEMS6203-W1

NOTICE: READ ENTIRE MANUAL PRIOR TO INSTALLING PRODUCT

⚠ **WARNING**: Cancer and Reproductive Harm - www.P65Warnings.ca.gov
⚠ **ADVERTENCIA:** Cáncer y daño reproductivo - www.P65Warnings.ca.gov
⚠ **AVERTISSEMENT:** Cancer et effets néfastes sur la reproduction - www.P65Warnings.ca.gov

LIMITED WARRANTY

All goods sold hereunder are warranted to be free from defects in material and factory workmanship for a period of three years from the date of purchase. Decorative finishes warranted for one year. We will replace at no costs goods that prove defective provided we are notified in writing of such defect and the goods are returned to us prepaid at Sanford, NC, with evidence that they have been properly maintained and used in accordance with instructions. We shall not be responsible for any labor charges or any loss, injury or damages whatsoever, including incidental or consequential damages. The sole and exclusive remedy shall be limited to the replacement of the defective goods. Before installation and use, the purchaser shall determine the suitability of the product for his intended use and the purchaser assumes all risk and liability whatever in connection therewith. Where permitted by law, the implied warranty of merchantability is expressly excluded. If the products sold hereunder are “consumer products,” the implied warranty of merchantability is limited to a period of three years and shall be limited solely to the replacement of the defective goods. All weights stated in our catalogs and lists are approximate and are not guaranteed.

This Page Intentionally Left Blank

Overview:

Zurn's exposed, hardwired automatic sensor flush valve for retrofit and new construction, and designed for modern commercial restrooms. Zurn smart and connected flush valve systems for water closets and urinals are performance-engineered delivering a superior user experience in both form and function.

Features:

- Zurn's AquaVantage® TPE Diaphragm
  Clog-resistant triple-filter or linear filter by-pass
  Chloramine resistant
  Dual seal
- Zurn's MetroVantage® Piston
  Clog-resistant by-pass
  Chloramine resistant
- Proprietary dezincification-resistant low lead brass alloy
- Actuator
  ZEMS 6 VDC motorized actuator
- Automatic sensor
  Fully configurable sensor range adjustment
  48 or 168 hour trap seal flush
  Capacitive sensing push button override
- Control stop
  Internal siphon-guard protection
  Sweat solder kit
  Cast wall flange with set screw
- Vacuum breaker
  High back pressure
  One piece hex coupling nut
- Internal seals
- Adjustable tailpiece
- Spud coupling and flange for top spud connection
- Wireless monitor (flush count & water usage)
- Endpoint

Specifications:

Sensor Range:	12" to 60" (adjustable)
Power Type:	Hardwired
Voltage:	6VDC
Operating Water Pressure:	25 psi [172 kPa] (Running); 80 Psi [552 kPa] Max (Static); note: Installations with running pressure below recommended may void warranty. Higher running pressure may be required for some fixtures. Consult fixture manufacturer for details.
Operating Temperature:	35°F to 104°F [2°C to 40°C]

Important Safety Information:

- Do not convert or modify this Zurn product. All warranties will be voided.
- All electrical wiring is to be installed in accordance with national/local codes and regulations.
- All plumbing is to be installed in accordance with applicable codes and regulations.
- Water supply lines must be sized to provide an adequate volume of water for each fixture.
- Flush all water lines prior to making connections.
- Do not use pipe sealant or plumbing grease on any fitting other than the control stop inlet.
- Sensor units should not be located across from each other or in close proximity to highly reflective surfaces.
- Control stop should never be opened to allow flow greater than fixture is capable of evacuating. In the event of valve failure, fixture must be able to handle a continuous flow.
- Be certain power is off to prevent damage to electrical components and/or personal injury.

Prior to Installation:

- The ZEMS-W1 flushometer is designed to operate optimally between 25 psi (running) to 80 psi (static) water pressure (172 to 552 kPa). Higher running pressure may be required for some fixtures. Consult fixture manufacturer for details.
- When installing a flushometer, it is important that the flush volume match the requirements of the plumbing fixture.
- To protect chrome finish, do not use toothed tools to install or service the flushometer.
- Optional: Single-gang electrical outlet for plug-in power converter.
- Electrical wiring to the power converter outlet (120 VAC, 50 watts service required for each power converter used).
- Before installing your Zurn® automatic sensor-equipped flush valve, the items listed below should already be installed on site:
  - Closet or urinal fixture
  - Fixture carrier
  - Drain line
  - Water supply line

Electronic Emission Notices:

This device complies with Part 15 of the FCC Rules. Operation is subject to the following two conditions: (1) this device may not cause harmful interference, and (2) this device must accept any interference received, including interference that may cause undesired operation.

The following information refers to Zurn Smart Connected Products, types: -W1. This equipment has been tested and found to comply with the limits for a Class A digital device, pursuant to Part 15 of the FCC Rules. These limits are designed to provide reasonable protection against harmful interference intended for use in non-residential/non-domestic environments. This equipment generates, uses, and can radiate radio frequency energy and, if not installed and used in accordance with the instructions, may cause harmful interference to radio communications. However, there is no guarantee that interference will not occur in a particular installation. If this equipment does cause harmful interference to radio or television reception, which can be determined by turning the equipment off and on, the user is encouraged to try to correct the interference by one or more of the following measures:

- Reorient or relocate the receiving antenna.
- Increase the separation between the equipment and receiver.
- Connect the equipment into an outlet on a circuit different from that to which the receiver is connected.
- Consult an authorized dealer or service representative for help.

Zurn is not responsible for any radio or television interference caused by using other than specified or recommended cables and connectors or by unauthorized changes or modifications to this equipment. Unauthorized changes or modifications could void the user's authority to operate the equipment.

<u>NOTE</u>: The information in this manual is subject to change at any time without notice. Installations may be performed at different times of construction by different individuals. For this reason, these instructions should be left on-site with the facility or maintenance manager.

Parts List

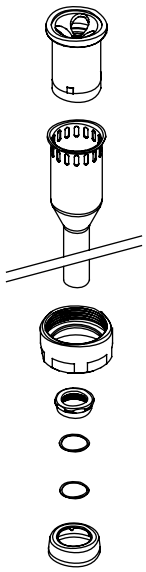

Flush Connection
for Urinal

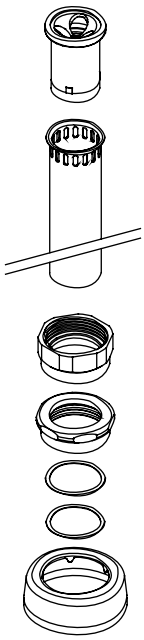

Flush Connection
for Water Closet

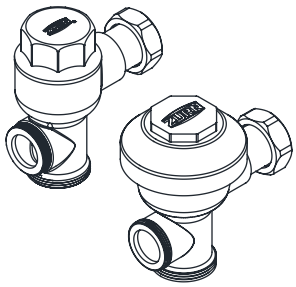

Valve Body

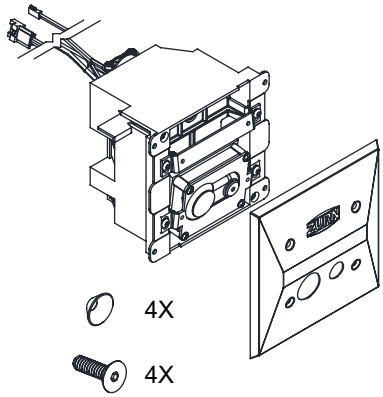

ZEMS-W1 Electronics
Enclosure and Endpoint

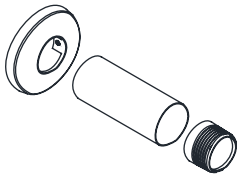

Sweat Solder Connection
with Cast Wall Flange

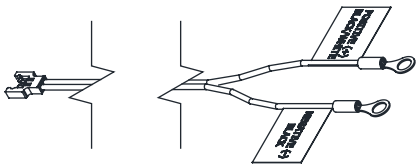

Sensor Power Supply Cable

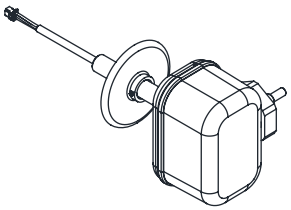

ZEMS-W1 Actuator

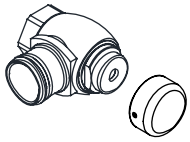

Control Stop
with Vandal Cap
(optional with AquaFlush)

Required Tools

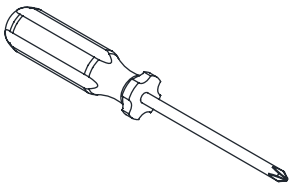

Phillips Head
Screwdriver

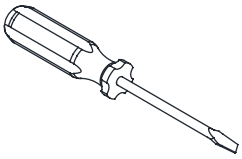

Flat Head
Screwdriver

Sheetrock Saw

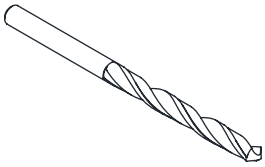

1-3/4”
Bit

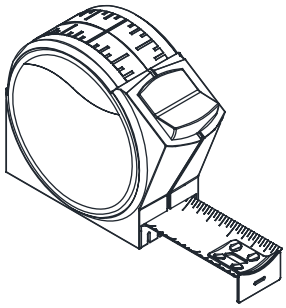

Measuring Tape

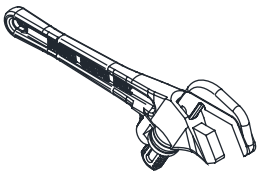

Smooth Jawed
Wrench

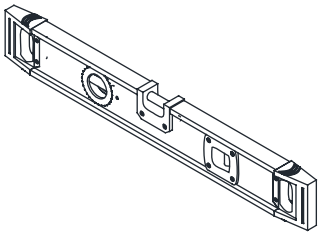

Level

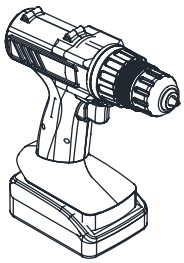

Hand Drill

Sweat Solder Adapter Installation Instructions

NOTE: Before installation, turn off water supplies to existing fixture and remove flushometer if replacing an existing device.

1. Measure distance from finished wall to the center line of the fixture spud. If necessary, cut water supply pipe 1-1/4" shorter than this measurement. Deburr by chamfering O.D. and I.D of end of water supply pipe.

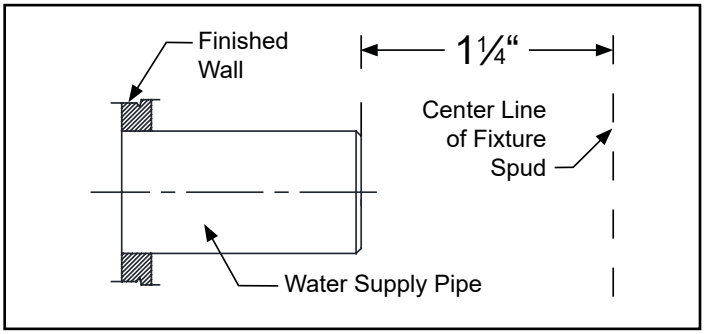

2. Slide threaded sweat solder adapter onto water supply pipe until shoulder stops on end of pipe. Then sweat-solder the adapter to water supply pipe.

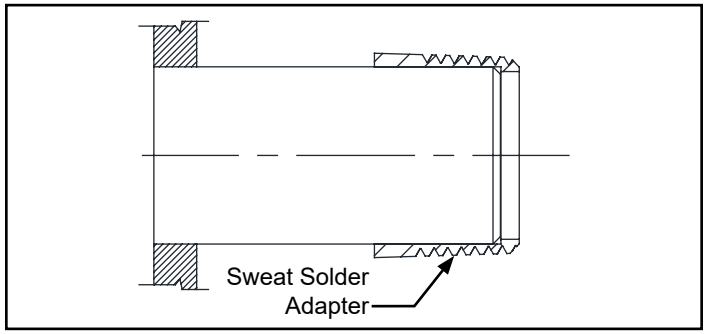

3. Measure distance from finished wall to first thread of sweat solder adapter. If necessary, cut chrome cover tube this length.

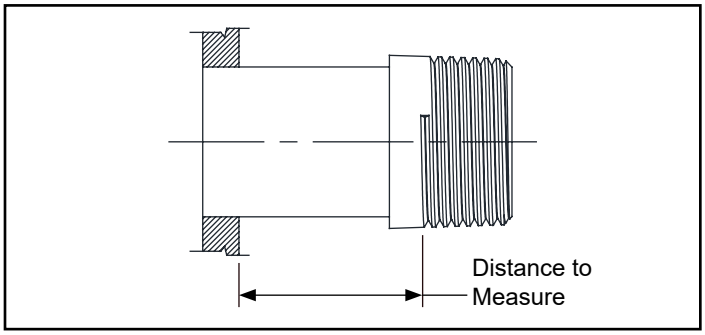

4. Slide wall escutcheon over chrome cover tube and slide both items over water supply pipe. Press wall escutcheon flush against finished wall and tighten set screw with hex wrench (supplied) to secure it in place.

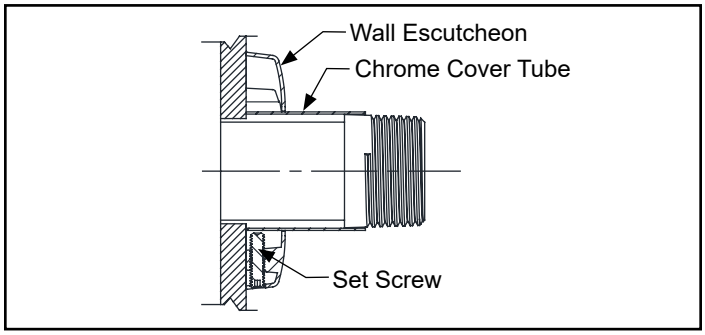

Control Stop Installation Instructions

1. Install control stop assembly by threading it onto water supply pipe and tightening with a smooth jawed wrench. Apply thread sealing compound or pipe tape to male NPT thread on sweat solder adapter only.
Prior to turning on main water supply line ensure all stop valves are closed off tight by using a flathead screwdriver and turning the stop valve adjustment screw clockwise.

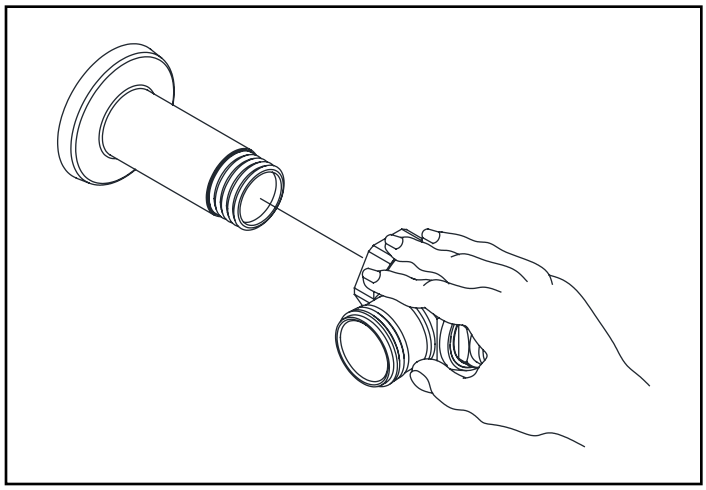

2. When all stop valves are properly connected to the water supply line and water pressure is available, open the control stop using a flat head screwdriver and turning the stop valve adjustment screw counterclockwise.
Allow the water supply line to flush any debris or sediment that may be present in the line. Close the control stop once the lines are completely flushed.

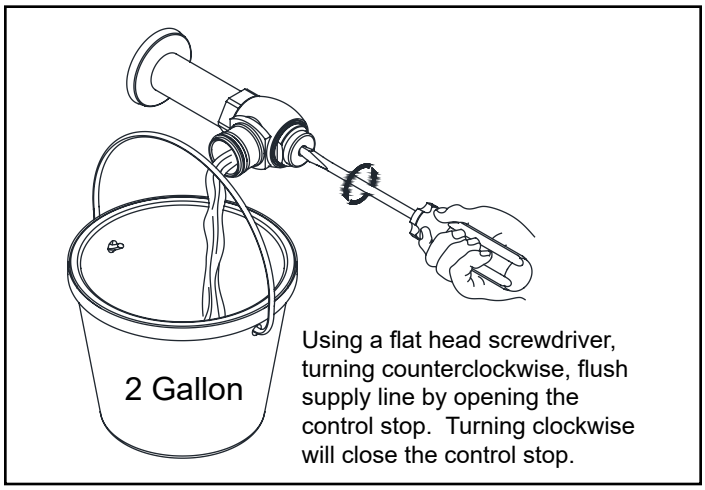

Flush Valve Installation Instructions

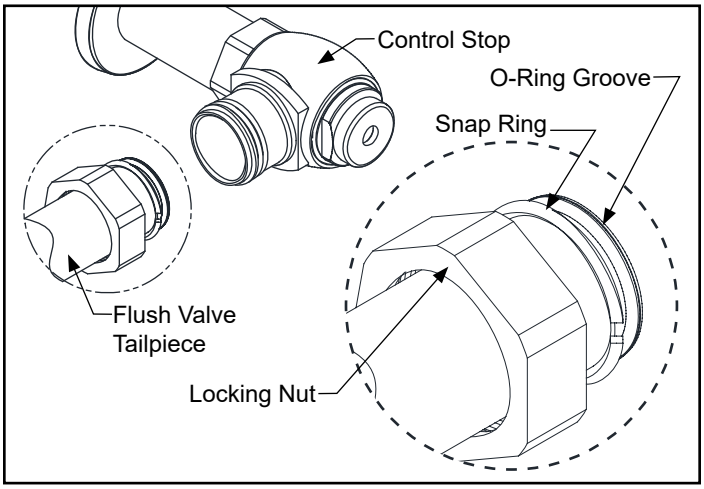

Prior to attaching flush valve tailpiece to control stop, inspect and verify that the O-ring seal is located within the O-ring groove at the tailpiece. Ensure that the locking nut and locking snap ring are also present on the tailpiece.

Lubricate O-ring with water if necessary and insert flush valve tailpiece into the control stop valve. Tighten locking nut using a smooth jawed wrench.

Vacuum Breaker & Flush Connection Installation Instructions

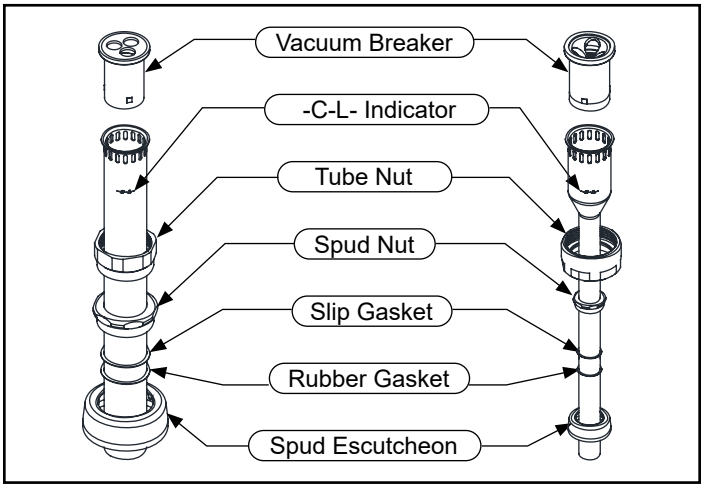

Determine the length of vacuum breaker tube required to join the flush valve and fixture spud, and cut if necessary.

Slide the tube nut, spud nut, slip gasket, rubber gasket and spud escutcheon over the vacuum breaker tube and insert tube into fixture spud. Hand tighten tube nut to valve body and hand tighten spud nut onto fixture spud. Adjust the valve assembly for plumb. Tighten fixture spud nut, vacuum breaker tube nut and locking nut with a wrench.

Adjust and plumb the valve assembly. Tighten all connections with smooth jawed wrench and turn on water supply at the control stop.

⚠ **DO NOT** cut vacuum breaker tube shorter than 6” below the -C-L- indicator mark, as vacuum breaker must be 6” above the fixture. Consult plumbing Codes & Regulations for specific details.

Actuator Installation Instructions

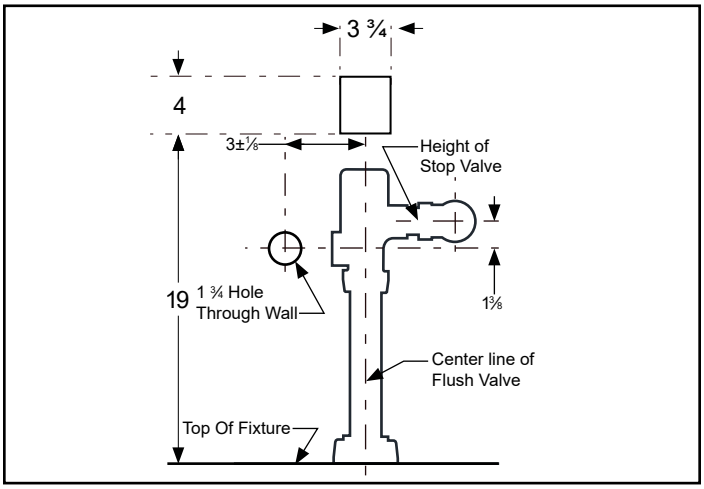

1. Cut out through wall openings as shown.

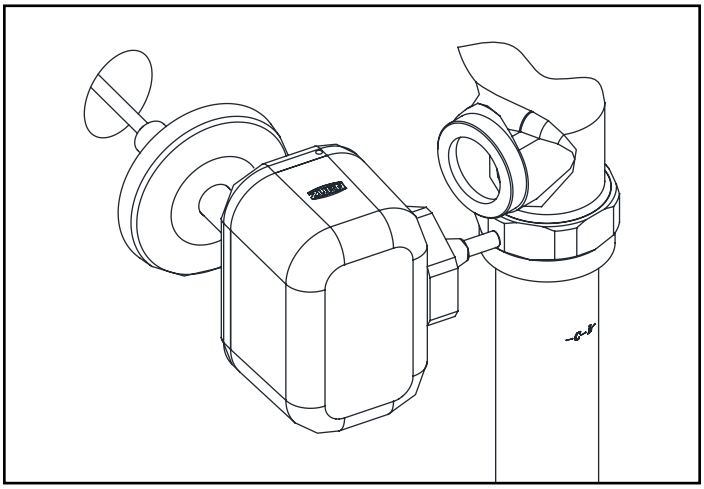

2. Run “fish tape” from top 3-3/4” by 4” opening to bottom 1-3/4” hole.
3. Install actuator escutcheon to the actuator pipe. Do not tighten setscrew at this time.
4. Pull actuator cable through bottom hole with “fish tape” and back through top opening.
5. With escutcheon loose and handle port washer installed, push cables and cable supply tube into wall. The actuator must be angled away from the valve body at this time until the actuator push rod clears the handle port flange. The actuator can now be mounted to the flush valve and tightened.
6. Push escutcheon back to wall and tighten setscrew.

Sensor and Endpoint Installation Instructions

⚠ Main power should be turned off before performing these steps.

⚠ These steps should only be performed by a licensed electrician.

- The P6900-HW6 Hardwire Power Converter can be used to power up to six pairs of Connected ZEMS Actuator and Sensor/Endpoint
- Each flush valve comes with one polarized connecting wire for power. The black lead with white trace is positive (+) and the plain black lead is negative (-).

1. Attach power cable to small connector coming out of the back-side of the Connected ZEMS electronics enclosure.

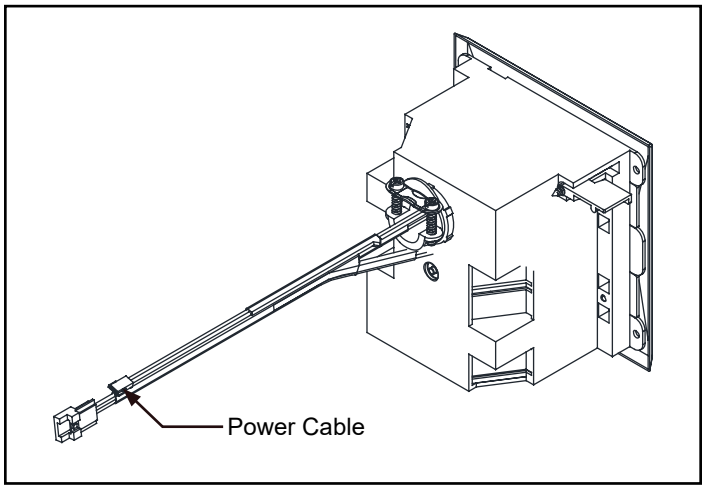

2. Loosen cover retaining screw with Phillips head screw driver to remove cover from HW6 enclosure. Feed power cord into enclosure box through wire clamp (not provided). Tighten screws clockwise on wire clamp to secure power cable in place.

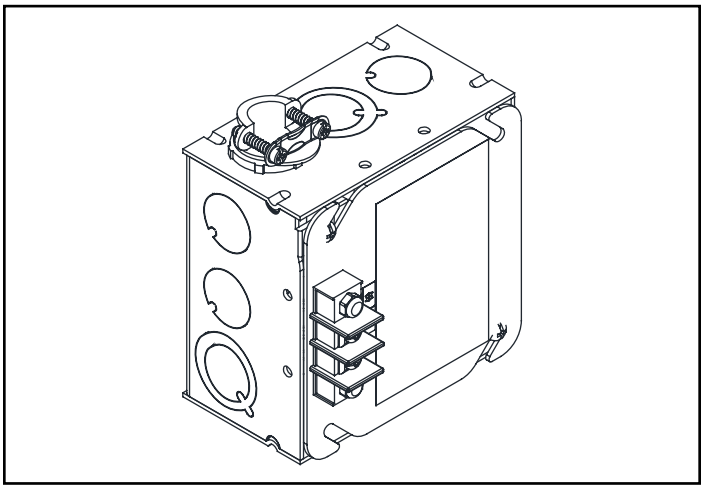

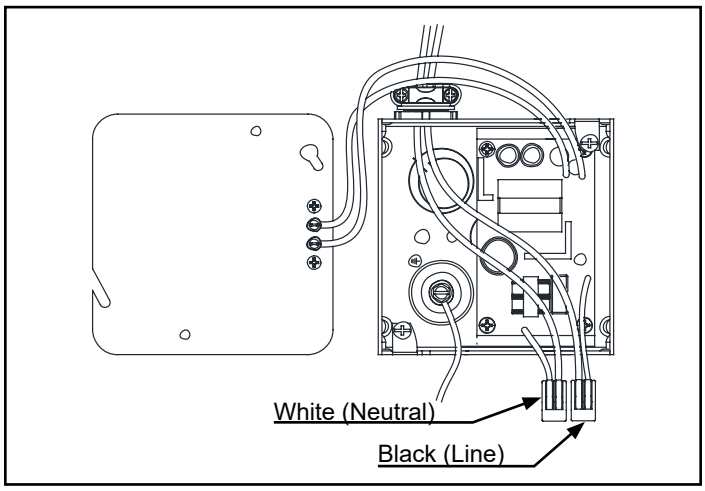

3. Connect power cord with Wago connector as outlined on the left. See P6000-HW6 installation manual for detailed instructions.
4. Each pair of sensor/endpoint and actuator should be wired in parallel as shown in the diagram below, and should be connected using the optional P6000-MJ (Mini Junction Box) or crimp lugs.
5. For installing a single pair of sensor/endpoint and actuator, the optional P6900-ACA plug-in power converter can be used. To do so: Sever the barrel jack of the ACA; splice the ACA's positive lead to the power cable's positive lead; splice the ACA's negative lead to the power cable's negative lead; insulate any exposed electrical wiring.

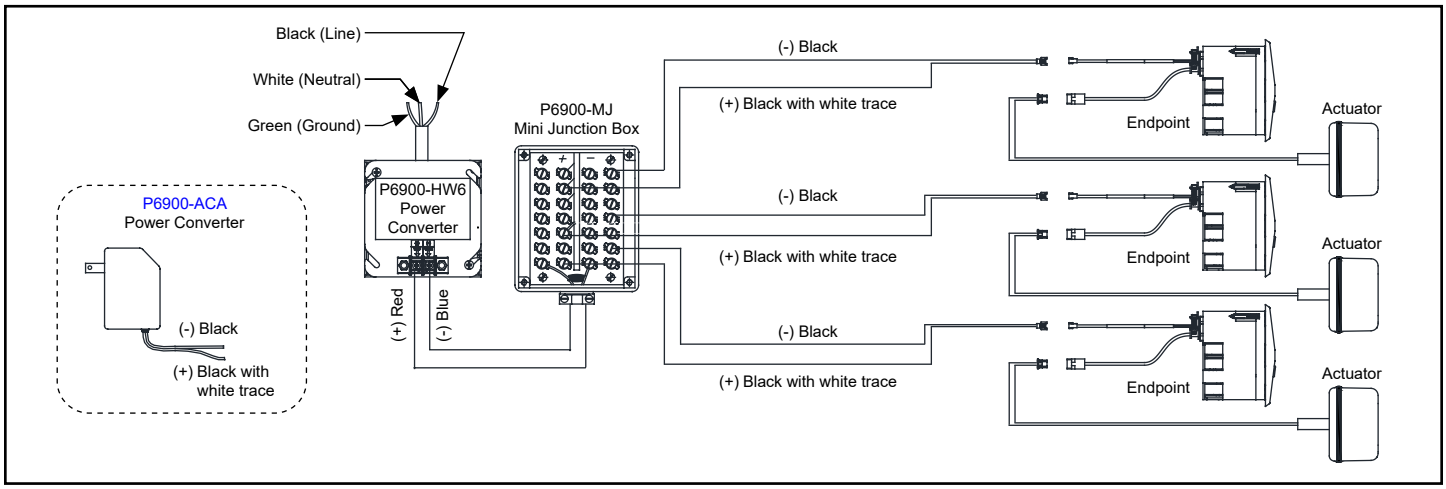

6. Feed motor cable from actuator to enclosure. Connect the motor cable from actuator to the large three-wire motor cable connector exiting the backside of enclosure.

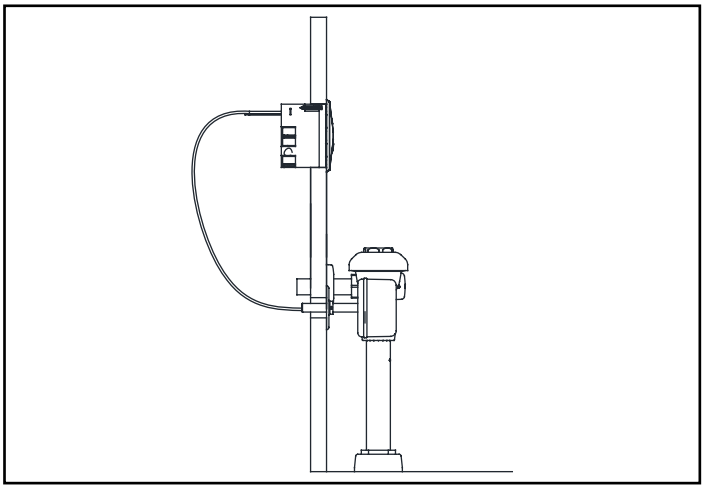

7. Mount the box into drywall cutout. Hold enclosure to the wall and tighten the two included fasteners attached to blue box.

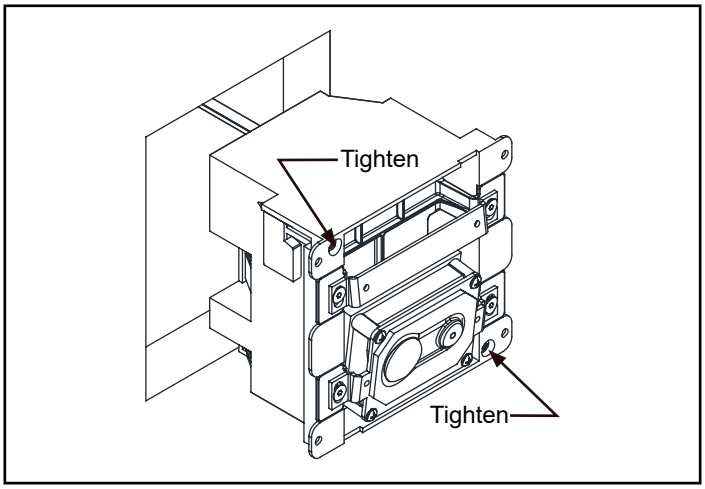

8. Apply light pressure to sensor faceplate while assembling to compress gaskets while tightening fasteners with supplied Allen wrench.

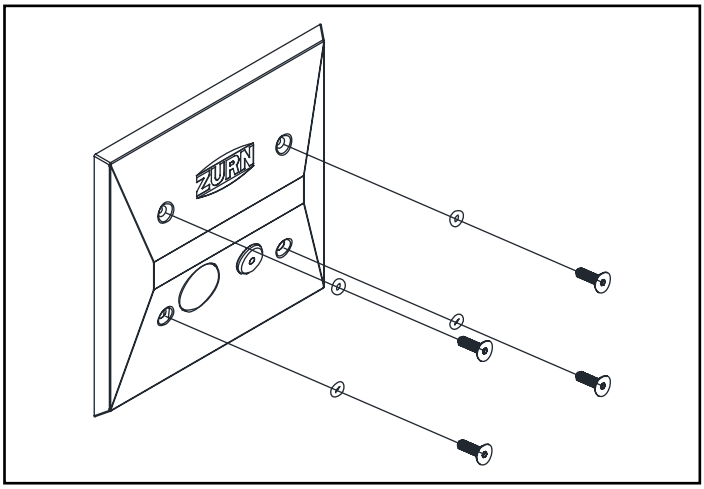

Customized Sensor Range Setting

The ZEMS-W1 is factory set to accommodate most closet and urinal installations. If this factory setting does not accommodate your specific environment, follow the steps below to customize your range settings for your specific ZEMS-IS-W1 model.

CALIBRATION INSTRUCTIONS FOR ZEMS-W1

1. Obtain a target. SEE FIGURE on the right.
2. PRESS and HOLD button for 10 seconds or until the LED turns solid. (Unit will blink four times and flush once while button is being held.)
3. RELEASE finger after LED turns solid.
4. PRESS and HOLD button when LED starts blinking.
5. RELEASE finger when LED turns solid.
6. Set target at desired distance (no less than 18” from sensor face) and verify NO other objects are in view of sensor face.
7. Keep target steady (Unit will blink while calibrating.)
8. After 30 seconds, calibration ends with a fast double blink or a solid LED for 5 seconds.
9. IF THE LED REMAINS SOLID FOR 5 SECONDS AFTER CALIBRATION, the calibration was NOT successful. REPEAT STEPS 2-8.
10. For closet installations continue to “VERIFY CALIBRATION FOR CLOSET INSTALLATIONS”.

Verify Calibration for Closet Installations

1. Stand outside closet stall and close door and verify that sensor does not see stall door. If LED blink/flashes, recalibrate to a shorter range.
2. Slowly open door to closet stall while looking at ZEMS-IS-W1 sensor.
3. If LED blinks while door is opening, recalibrate to a shorter range. FAILURE TO DO SO WILL RESULT IN “GHOST” FLUSHING.

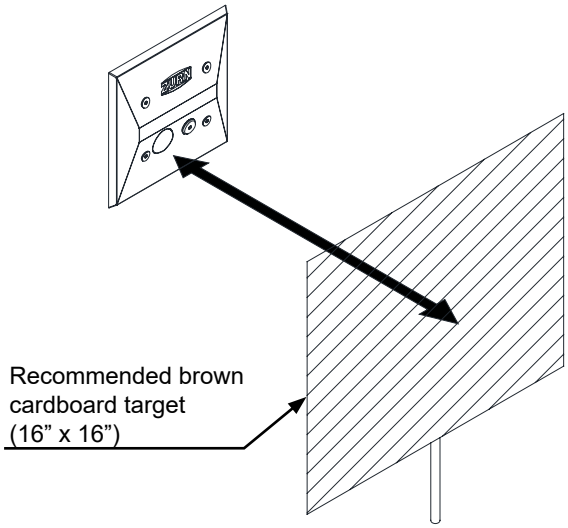

Recommended Distance Settings

Urinal	22” from Sensor Face
Water Closet	6”-8” beyond front lips of toilet bowl

⚠ Calibrating to a distance less then 18” from sensor face may result in false activation.

Activating the Motor Actuator with the Sensor

To activate the motor actuator with the sensor, simply place a target in front of the sensor. A single red light will flash indicating the sensor has recognized the target. If the target stays in view for eleven seconds, two flashing red lights will occur. This indicates that the target has been in view for the required time and, upon leaving the view, a signal will be sent to the motor actuator to flush the flush valve. NOTE: If the target does not stay in view for the required eleven seconds, a flush will not occur.

Care and Cleaning Instructions

- Do not use any abrasive or chemical cleaners to clean the flushometer.
- The suggested cleaning of chrome plated surfaces is simply to clean them with mild soap and water, then dry. Commercial cleaning compounds are never recommended.
- Upon cleaning other areas of the restroom, be sure that the sensor lenses are protected from other cleaning chemicals/ solvents to prevent potential damage to the sensor and/or electronics.
- Valves used in installations subject to shut down because of cold and freezing conditions should be maintained in the following manner: After the main supply has been shut off and the water drained from the system, remove the stop valve cap and stop valve internals to allow the water to drain from the flush valve itself.

Troubleshooting: ZEMS-W1 Flush Valve

Problem	Possible Cause	Corrective Action
Valve will not operate.	Stop valve is closed	Open stop valve.
	Supply valve is closed.	Open supply valve.
	The electric wire(s) is not connected.	Connect the wires.
	Sensor lens is dirty.	Clean lens.
	Reflective surface in front of sensor.	Remove the reflective surface from in front of the sensor.
	Detection range not adjusted properly.	Adjust the detection range.
	The infrared sensor or the actuator is out of order.	Contact distributor for replacement.
	Sensor is faulty.	Replace sensor.
	No power provided by power supply.	Replace power supply.
Flush valve does not activate after user leaves.	Sensor does not recognize a user.	Re-calibrate sensor per “Calibration Instructions” section.
	Power supply is disrupted.	Check available voltage where escutcheon is attached to wall with DC voltmeter. 6-9 VDC is required.
		Verify connection to actuator.
Repeated valve activation when power is provided.	Insufficient DC power level (less then 6 VDC).	Upgrade the -HW6 power supply to the new ZURN power supply (approximately 7.6 VDC).
Insufficient volume of water to adequately siphon fixture.	Stop valve is not open enough.	Open stop valve for desired volume of water.
	Urinal piston installed in closet valve.	Replace urinal piston with proper closet piston.
	Insufficient volume or pressure at supply.	Consult fixture guide for minimum gallons per minute flow and running pressure for satisfactory performance.
Valve is flushing too long or not shutting off.	Trip mechanism not seating properly due to foreign material between trip mechanism and seat.	Disassemble parts and rinse thoroughly.
	By-pass orifice is plugged or partially plugged.	Examine by-pass orifice and clean if necessary, being certain not to enlarge orifice opening.
	Line pressure is not adequate to force trip mechanism to seal.	Pressure is inadequate or has dropped below minimum operating range. Steps should be taken to increase the line pressure.
Water splashes out of fixture.	Supply volume is more than is necessary.	Adjust downward on control stop.
	Lime accumulation on vortex or spreader holes of fixture.	Remove the lime build up.
Flush is not considered quiet.	Control stop is not adjusted for quiet operation.	Adjust the control stop for quiet operation keeping in mind the fixture evacuation requirements.
	Fixture is contributing to noise.	Check noise created by fixture by placing a cover over the bowl opening to separate valve noise from bowl noise. If it is determined the fixture is too noisy, consult with fixture manufacturer.
	Piping system is source of noise.	High pressure in the system can sometimes be controlled by the stop valve. Other sources of noise may be the absence of air chamber and shock arrestors, loose pipes, improper size pipes, etc. In these cases the building engineer should be consulted.
Flush valve “ghost” flushes or activates randomly with no user present.	Sensor lens is dirty.	Clean lens.
	Power supply output is out of tolerance.	DC voltage must be between 6-9 VDC. Check for power fault or malfunction in a unit or replace with a Zurn power converter.
	Sensor is viewing stall door.	Re-calibrate sensor per “Calibration Instructions” section.
Flush valve shuts off too quickly.	**Diaphragm Valves**	
	Damaged diaphragm.	Install new P6000-ECA, P6000-EUA replacement kit.
	Enlarged by-pass orifice.	Install new P6000-ECA, P6000-EUA replacement kit.
	Piston Valves	
	Damaged piston.	Install new P6200-EC, P6200-EU replacement kit.
	Enlarged by-pass orifice.	Install new P6200-EC, P6200-EU replacement kit.
Valve is short flushing.	**Diaphragm Valves**	
	Enlarged by-pass orifice.	Install new P6000-ECA, P6000-EUA replacement kit.
	Urinal diaphragm installed in closet valve.	Replace urinal diaphragm with proper closet diaphragm.
	Piston Valves	
	Enlarged by-pass orifice.	Install new P6200-EC, P6200-EU replacement kit.
	Urinal piston installed in closet valve.	Replace urinal piston with proper closet piston.

For further assistance with troubleshooting, visit http://www.zurn.com/

Troubleshooting: Endpoint, Gateway, & Portal

Problem	Possible Cause	Corrective Action
Endpoint		
Device is not communicating.	Device lost power.	Double check power connections and supply.
	Power cable was not connected.	Ensure that cable is securely connected.
	Gateway disconnected.	See gateway troubleshooting.
Connected device is not functioning.	Wiring error in power cable.	Ensure that cable is securely connected.
	See Connected Device Troubleshooting Guide.	See Connected Device Troubleshooting Guide.
Faucet / Flush Valve actuates, but does not register on portal.	IR sensor not connected to endpoint.	Connect IR sensor to endpoint.
Gateway		
Gateway appears online and LoRa light is on, but activations are not registering on the plumbSMART product page.		Power cycle gateway.
Gateway is powered up where status light flashes, LoRa light is off.	No ethernet connection; no SIM card.	Reconnect ethernet or reinsert simcard, depending on device type.
	Gateway was disabled in Senet.	Call customer support.
	Building LAN has restricted access.	Contact organization IT department.
No lights are flashing.	Gateway is not powered.	Power gateway.
Portal		
High daily use alerts.	Usage spiked.	Adjust threshold (possibly move to portal area).
Endpoint is not appearing on portal.	Endpoint was not registered on plumbSMART.	Register device in plumbSMART.
Device is not communicating alert.	See endpoint troubleshooting.	See endpoint troubleshooting.
	Gateway is at extreme limit of communication range.	Call customer support to verify signal strength. (Move gateway closer to connected devices.)
Water usage does not match reported usage.	Not paired with correct product type.	Call customer support.
	Not enough water pressure.	Call building maintenance.
	Swapped lids / labels.	Call customer support.
Omitted activations.	Gateway is at extreme limit of communication range.	Call customer support to verify signal strength. (Move Gateway closer to connected devices.)
Push button assembly is leaking.	Compression fitting or nuts are loose.	Tighten nuts or fittings.
	Piston O-ring is damaged.	Replace piston assembly.

For further assistance with troubleshooting, visit https://plumbsmart.zurn.com/app/training

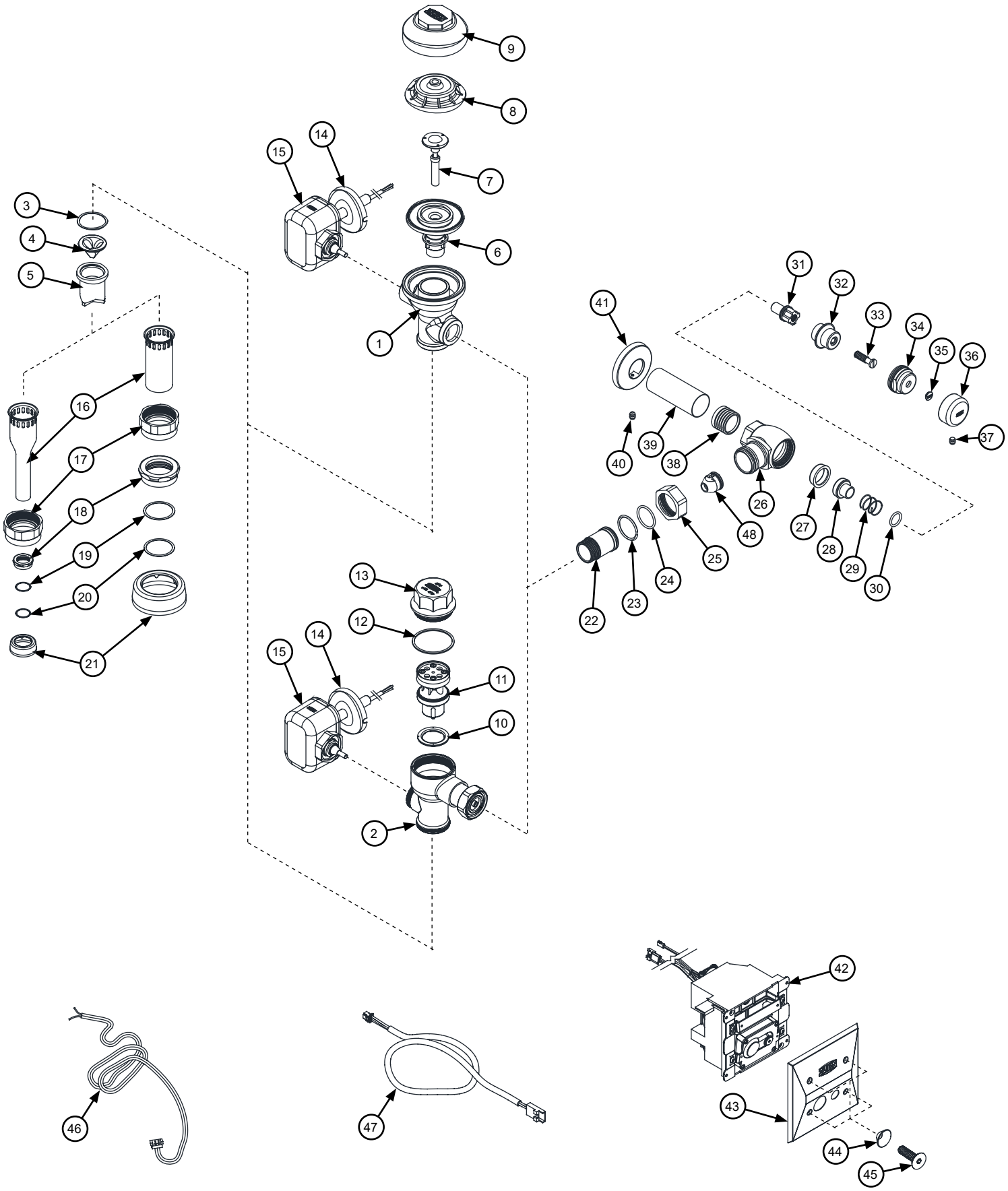
9
8
7
6
1
14
15
3
4
5
16
17
18
19
20
21
13
12
11
10
2
41
31
32
33
34
35
36
37
40
39
38
26
48
27
28
29
30
25
24
23
22
42
43
44
45
46
47

Part Identification

1. AquaFlush & AquaVantage Valve Body
2. MetroVantage Valve Body
3. Vacuum Breaker Friction Washer
4. Vacuum Breaker Insert
5. Vacuum Breaker Duckbill
6. Diaphragm Repair Kit
7. Trip Mechanism
8. Plastic Cover
9. AquaFlush & AquaVantage Valve Body Cover
10. Main Seat
11. Internal Kit
12. MetroVantage Valve Body Cover Gasket
13. MetroVantage Valve Body Cover
14. ZEMS Escutcheon
15. ZEMS-W1 Actuator
16. Vacuum Breaker Tube
17. Vaccum Breaker Tube Nut
18. Spud Nut
19. Spud Friction Washer
20. Spud Sleeve
21. Spud Escutcheon
22. Tailpiece
23. Snap Ring
24. Tailpiece O-Ring
25. Locking Ring
26. Stop Valve
27. Piston Seal
28. Piston
29. Stop Spring
30. Guide O-Ring
31. Piston Guide
32. Guide Holder
33. Adjusting Screw
34. Stop Cap
35. Snap Cap Screw Cover
36. Vandal-Resistent Control Stop Cover
37. Set Screw for Control Stop Cover
38. Sweat Solder Adapter
39. Supply Cover Tube
40. Setscrew for Cast Wall Escutcheon
41. Cast Wall Escutcheon
42. Zems-W1 Electronics Enclosure And Endpoint
43. ZEMS Sensor Cover Plate
44. ZEMS Cover Plate Washers
45. ZEMS Cover Plate Screws
46. ZEMS Sensor Power Supply Cable, 20'
47. ZEMS Actuator Extension Cable, 24" (Optional), (Max. two (2) per installation)
48. Urinal 0.125/0.250 gpf Tailpiece filter

AquaFlush & AquaVantage Cover and Repair Kits	**Product No.**
Outside Cover - CP, Items 9	P6000-LL
Inside Cover, Item 8	P6000-L
Water Closet Kit – 1.28 GPF, Items 6-7	P6000-ECA-HET
Water Closet Kit – 1.6 GPF, Items 6-7	P6000-ECA-WS1
Water Closet Kit – 3.5 GPF, Items 6-7	P6000-ECA-WS
Urinal Kit – 0.125 GPF, Items 6-7	P6000-EUA-ULF
Urinal Kit – 1.0 GPF, Items 6-7	P6000-EUA-WS1
Urinal Kit – 1.5 GPF, Items 6-7	P6000-EUA-WS

MetroVantage Cover and Repair Kits	**Product No.**
Outside Cover, Item 13	P6200-LL
Outside Brass Cover for Metroflush ULF, Item 13	P6200-LL-ULF-CP
Outside Cover O-Ring, Item 12	P6200-L12
Main Seat, Item 10	P6000-S-30
Main Seat for Metroflush Valve ULF, Item 10	P6200-MS-ULF
Water Closet Kit – 1.28 GPF, Items 10-11	P6200-EC-HET
Water Closet Kit – 1.6 GPF, Items 10-11	P6200-EC-WS1
Water Closet Kit – 3.5 GPF, Items 10-11	P6200-EC
Urinal Kit – 0.125 GPF, Items 10-11	P6203-EU-ULF
Urinal Kit – 1.0 GPF, Items 10-11	P6200-EU-WS1
Urinal Kit – 1.5 GPF, Items 10-11	P6200-EU
Urinal 0.125/0.250 gpf Tailpiece filter, Item 48	PTR6203-FA-LF

Flush Connections and Spud Coupling Kits	**Product No.**
Flush Tube Assembly for Concealed Flush Valves Refer to Section Q in Aqua Parts Guide Specify 'L' Dim and Valve Used	P6000-Q_ _-
Vacuum Breaker Repair Kit, Items 3-5	P6000-B
Spud Coupling Assembly (Specify Size)	P6000-HN

AquaFlush & Aqua Vantage Repair Part – Inside Part	**Product No.**
Urinal Relief Valve, Item 7	P6000-EU13
Closet Relief Valve, Item 7	P6000-EC13

AquaVantage® Rebuild Kits	**Product No.**
Water Closet Rebuild Kits, Items 3-7, 26	P6000-ECA-HET-RK
	P6000-ECA-WS1-RK
	P6000-ECA-WS-RK
Urinal Rebuild Kits, Items 3-7, 26	P6000-EUA-ULF-RK
	P6000-EUA-WS1-RK
	P6000-EUA-WS-RK

Control Stop Repair Kit and Parts	**Product No.**
Control Stop Repair Kit for 1" and 3/4", Items 27-33	P6000-D-SD
Seal Seat for 1" and 3/4", Items 27	P6000-D42
Sweat Solder Connection	P6000-YBA
Vandal-Resistent Cover, Item 36	P6000-VC

Adjustable Tailpieces	**Product No.**
Adjustable Tailpiece for Standard Flush Valve, Items 22-24	P6000-J1
Tailpiece Coupling Assembly, Items 23-25	P6000-K
Tailpiece Locking Ring, Item 25	P6000-C30
Tailpiece O-Ring, Item 24	P6000-C31
Coupling Nut	P6000-C32

Connected ZEMS Repair Kits	**Product No.**
ZEMS-W1 Actuator, Item 15	PEMS6000-HYM-G2
ZEMS Escutcheon, Item 14	PEMS6000-G
Connected ZEMS Retrofit Kit for ZEMS G2 Series, Items 42-46	PEMS6000-RK-W1
Sensor Cover Plate, Washers, and Screws, Items 43-45	PEMS6000-22-G2
ZEMS Sensor Power Supply Cable, 20', Item 46	PEMS6000-IS-CW-2
ZEMS Actuator Extension Cable, 24", Item 47 (Optional) (Max. two (2) per installation)	PEMS6000-CW-G2

Patent zurn.com/patents
US 1.855.ONE.ZURN **CANADA** 1.877.892.5216
ZURN.COM

by zurn ELKAY Water Solutions