AQUASPEC® FAUCETS

MODEL - Z81200-XL SERIES
4” [102] CENTERSET

TECHNICAL INFORMATION

FLOW: 2.2 GPM [8.3 L] PRESSURE COMPENSATING AERATOR
MAXIMUM PRESSURE: 125 PSI
MAXIMUM TEMPERATURE: 180° F
HANDLE NUT TORQUE: 15-20 IN-LBS
CARTRIDGE STYLE: QUARTER TURN CERAMIC DISK
(CAN USE ZURN METERING CARTRIDGE)

**OTHER AERATORS AVAILABLE BY REQUEST*

⚠ **WARNING**: Cancer and Reproductive Harm - www.P65Warnings.ca.gov
⚠ **ADVERTENCIA:** Cáncer y daño reproductivo - www.P65Warnings.ca.gov
⚠ **AVERTISSEMENT:** Cancer et effets néfastes sur la reproduction - www.P65Warnings.ca.gov

INSTALLATION INSTRUCTIONS

1. REMOVE FAUCET BODY FROM CARTON AND APPLY PLUMBERS PUTTY TO UNDERSIDE OF BODY
2. PLACE FAUCET ON SINK AND REMOVE MOUNTING NUTS (ITEM #7A OR #9A) FROM BAG G68042.
3. HAND TIGHTEN MOUNTING NUTS FROM UNDER SING. MAKE SURE FAUCET IS CENTERED PROPERLY. DO NOT OVER TIGHTEN.
4. ATTACH LAVATORY SUPPLIES TO FAUCET WITH RISER NUTS (ITEM #7B OR #9B).
5. OPTIONAL: POP-UP (-P)
   GRID STRAINER (-G)
   ADA OFFSET GRID DRAIN (-GH)
   INSTALL POP-UP OR GRID STRAINER IN SINK OUTLET AND PLUMB WASTE CONNECTION.
6. INSTALL SPOUT INTO BASE AND TIGHTEN NUT (SEE VIEWS FOR SWING/RIGID CONNECTION).
   REFER TO “140° SWING INSTALLATION INSTRUCTIONS” FOR RESTRICTED SWING CONNECTION.
7. TURN WATER SUPPLY ON AND OPERATE FAUCET CHECKING FOR LEAKS.
8. IT MAY BE NECESSARY TO SHUT WATER OFF AND REMOVE CARTRIDGES TO CLEAN SUPPLY LINES. CARTRIDGES CAN BE REMOVED BY FIRST REMOVING THE HANDLES. COLOR INDEXES CAN BE REMOVED BY INSERTING A PIN INTO THE HOLE ON THE UNDERSIDE OF THE HANDLE. AFTER THE HANDLES HAVE BEEN REMOVED, UNSCREW THE HANDLE NUTS AND PULL UP ON THE CARTRIDGE.
9. REPLACE CARTRIDGES IN BODY AND HAND TIGHTEN HANDLE NUTS. PLACE HANDLES ON THE CARTRIDGE STEM AND LOCATE THEM AS DESIRED. TIGHTEN HANDLE NUT TO 15-20 IN-LBS OF TORQUE.
10. REPLACE HANDLE SCREWS AND COLOR INDEX BUTTONS.
11. INSTALL AERATOR INTO FAUCET AND HAND TIGHTEN. IT MAY BE NECESSARY TO UNSCREW AND CLEAN AERATOR AT START-UP.

MAINTENANCE

1. YOUR ZURN AQUASPEC FAUCET HAS A HIGHLY POLISHED NICKEL CHROME PLATED FINISH. CLEAN WITH SOAP AND WATER OR A MILD CLEANER WHICH IS SAFE FOR CHROME PLATING. DO NOT USE ACIDS OR TOILET BOWL CLEANER AS THEY WILL DAMAGE THE FINISH.
2. AQUASPEC FAUCETS CONTAIN CERAMIC DISK CARTRIDGES WHICH REQUIRE NO MAINTENANCE. TO REMOVE THE CARTRIDGE, SHUT THE WATER OFF, LOOSEN THE HANDLE NUTS AND PULL UP ON THE CARTRIDGE.

REPLACEMENT PARTS

COLD WATER CARTRIDGE	59517005
HOT WATER CARTRIDGE	59517006
INDEX BUTTONS	G60500

Rev. F | Date: 11/21/22 | C.N. No. 144877 | Prod./Dwg. No. CF1170

Z812A1-XL PICTURED

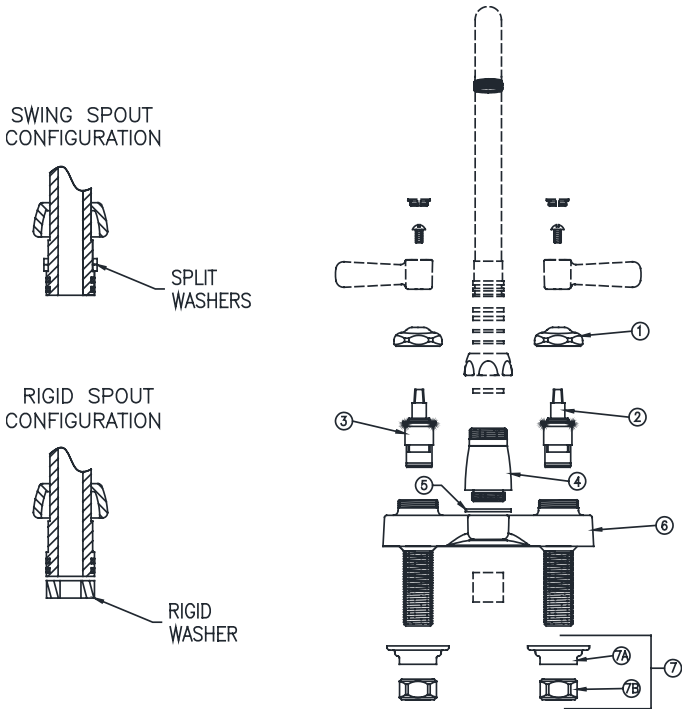

Item	Part Number	Description	Qty.
1	59440001	Handle Nut	2
2	59517005	Short Cold Cartridge XL	1
3	59517006	Short Hot Cartridge XL	1
4	60467005	Base XL	1
5	58155019	O-Ring	1
6	60454004	4” Centerset Gooseneck Body XL	1
7	GP60502	Mounting Hardware Bag	1
7A	G68042	Shank Nut Hardware Bag	1
7B	G68043	1/2” NPSM Riser Nut Bag	1

Z812A1-XL-P PICTURED

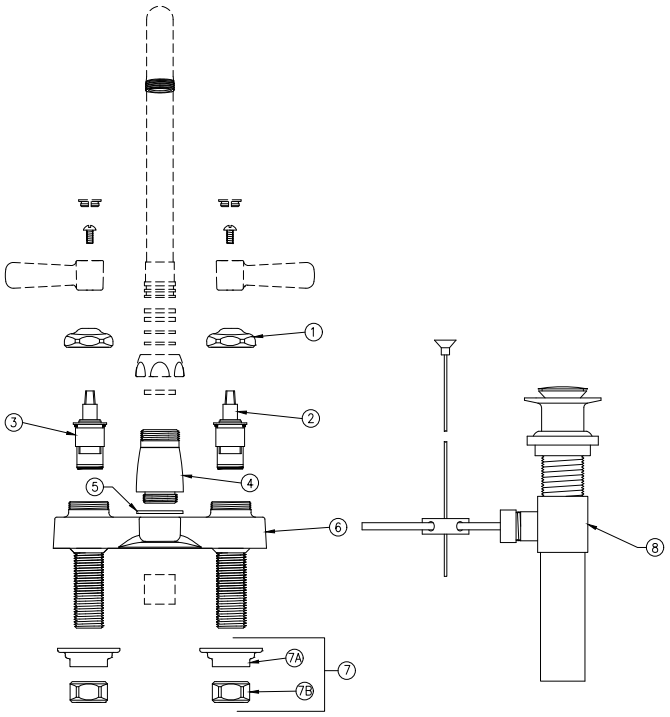

Item	Part Number	Description	Qty.
1	59440001	Handle Nut	2
2	59517005	Short Cold Cartridge XL	1
3	59517006	Short Hot Cartridge XL	1
4	60467005	Base XL	1
5	58155019	O-Ring	1
6	60454005	4” Centerset Gooseneck Body XL	1
7	GP60502	Mounting Hardware Bag	1
7A	G68042	Shank Nut Hardware Bag	1
7B	G68043	1/2” NPSM Riser Nut Bag	1
8	60505001	Pop-up Drain Assembly	1

Rev. F | Date: 11/21/22 | C.N. No. 144877 | Prod./Dwg. No. CF1170

Z812B4-XL PICTURED

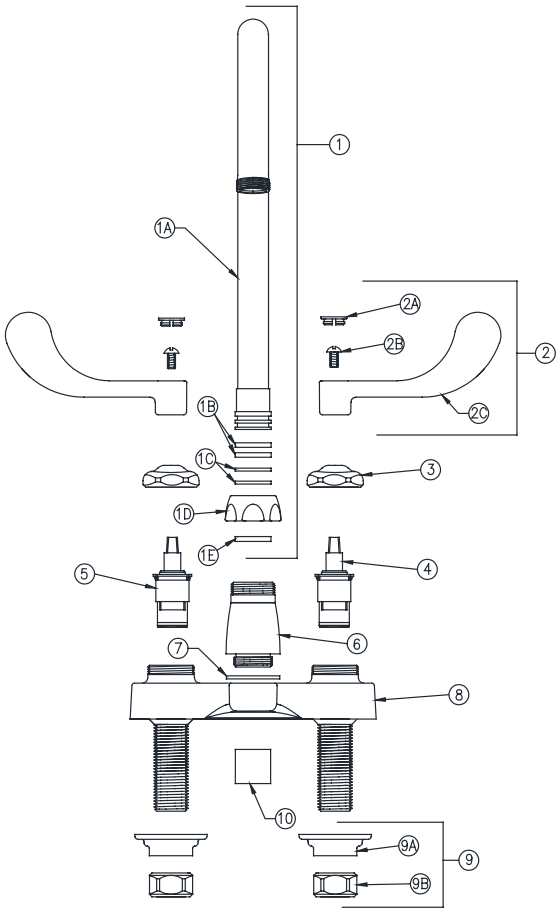

Item	Part Number	Description	Qty.
1	G67852	5-3/8” Centerline Gooseneck ‘B’ Spout Assembly XL	1
1A	92866002	5-3/8” Centerline Gooseneck Spout	1
1B	58155018	O-Rings	2
1C	59666001	Plastic Split Washers (Swing)	2
1D	59435001	Spout Nut	1
1E	59436001	Spacer Washer (Rigid)	1
2	GP68091	4” [102mm] Vandal-Resistant Metal Wrist Blade Handles	1
2A	G60500	Hot/Cold Color-Coded Indexes	1
	59454001	Hot Index	1
	59454002	Cold Index	1
2B	62464001	10-32 Screw	2
2C	59453001	Wrist Blade Handle	2
3	59440001	Handle Nut	2
4	59517005	Short Cold Cartridge XL	1
5	59517006	Short Hot Cartridge XL	1
6	60467005	Base XL	1
7	58155019	O-Ring	1
8	60454004	4” Centerset Gooseneck Body XL	1
9	GP60502	Mounting Hardware	1
9A	G68042	Mounting Nut	1
9B	G68043	1/2” NPSM Riser Nut	1
10	G63504	3/4”-27 Female Aerator - 2.2 GPM [8.3 L]	1

Rev. F | Date: 11/21/22 | C.N. No. 144877 | Prod./Dwg. No. CF1170

Z812A4-XL PICTURED

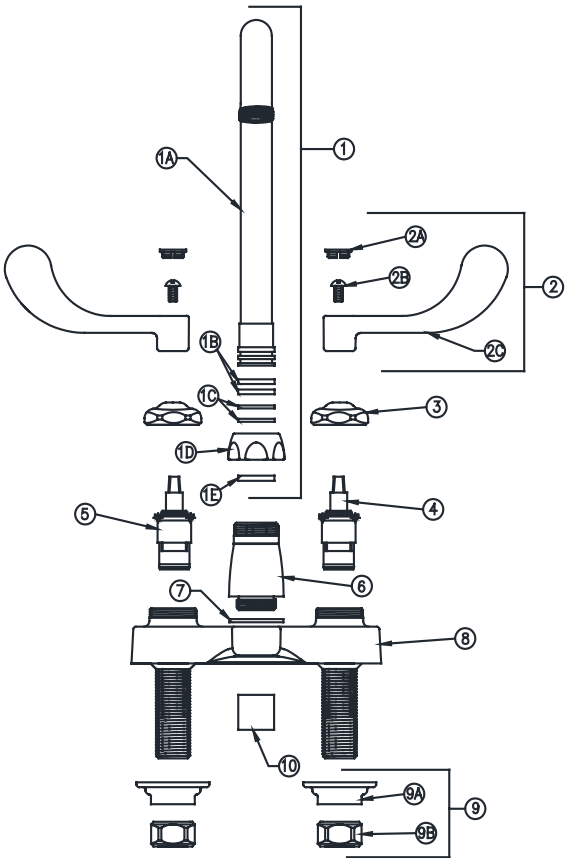

Item	Part Number	Description	Qty.
1	G67851	3-1/2” Centerline Gooseneck ‘A’ Spout Assembly	1
1A	92866001	3-1/2” Centerline Gooseneck Spout	1
1B	58155018	O-Rings	2
1C	59666001	Plastic Split Washers (Swing)	2
1D	59435001	Spout Nut	1
1E	59436001	Spacer Washer (Rigid)	1
2	GP68091	4” [102mm] Vandal-Resistant Metal Wrist Blade Handles	1
2A	G60500	Hot/Cold Color-Coded Indexes	1
	59454001	Hot Index	1
	59454002	Cold Index	1
2B	62464001	10-32 Screw	2
2C	59453001	Wrist Blade Handle	2
3	59440001	Handle Nut	2
4	59517005	Short Cold Cartridge	1
5	59517006	Short Hot Cartridge	1
6	60467005	Base	1
7	58155019	O-Ring	1
8	60454004	4” Centerset Gooseneck Body XL	1
9	GP60502	Mounting Hardware	1
9A	G68042	Mounting Nut	1
9B	G68043	1/2” NPSM Riser Nut	1
10	G63504	3/4”-27 Female Aerator - 2.2 GPM [8.3 L]	1

Rev. F | Date: 11/21/22 | C.N. No. 144877 | Prod./Dwg. No. CF1170