SINK FAUCET

Z842I3-XL Parts List

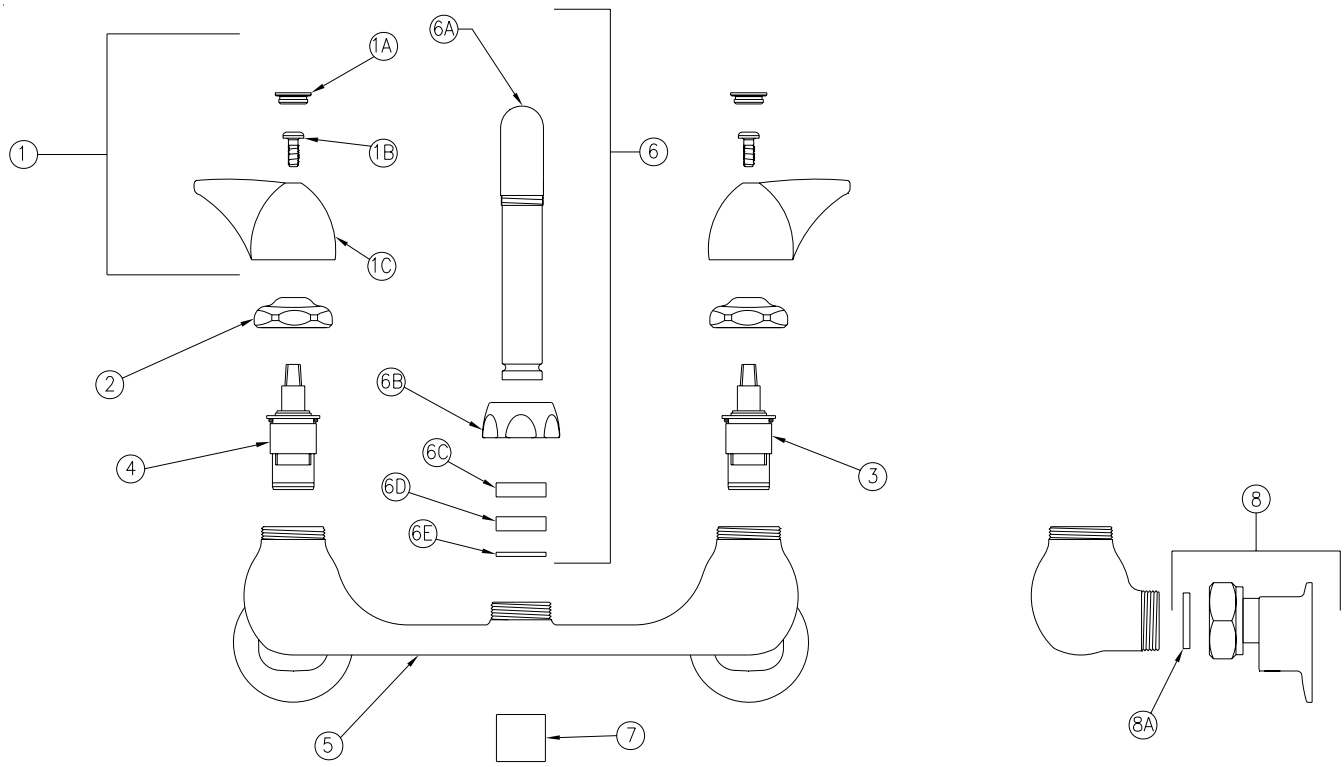

Item	Part Number	Description	Qty.
1	G60515	2” [51mm] Vandal-Resistant Metal Dome Lever Handles	1
1A	G60500	Hot/Cold Color-Coded Indexes	1
	59454001	Hot Index	1
	59454002	Cold Index	1
1B	62464001	10-32 Screw	2
1C	60514001	Dome Lever Handle	2
2	59440001	Handle Nut	2
3	59517005	Short Cold Cartridge	1
4	59517006	Short Hot Cartridge	1
5	59463005	Sink Body	1
6	G67893	14” Tubular ‘I’ Spout Assembly	1
6A	92957001	14" Tubular Swing Spout	1
6B	59435001	Spout Nut	1
6C	59441001	Bearing Washer	1
6D	59459001	Spout Seal	1
6E	92937001	Retaining Ring	1
7	G63504	3/4"-27 Female Aerator - 2.2 GPM	1
8	G67882	Short Supply Arm Assembly	2
8A	59748001	Gasket	2

ZURN INDUSTRIES, LLC ♦ COMMERCIAL BRASS OPERATION ♦ 2640 SOUTH WORK STREET ♦ FALCONER NY 14733
Phone: 1-800-997-3876 ♦ Fax: 1-919-775-3541 ♦ www.zurn.com
In Canada: ZURN INDUSTRIES LIMITED ♦ 3544 Nashua Drive ♦ Mississauga, Ontario L4V1L2 ♦ Phone: 905/405-8272 Fax: 905/405-1292

AquaSpec® is a registered trademark of Zurn Industries, LLC
©2009 Zurn Industries, LLC

Rev. A Date: 6/8/10 C.N. No. 126306
Form No. CF1391 Product No. Z842I3-XL