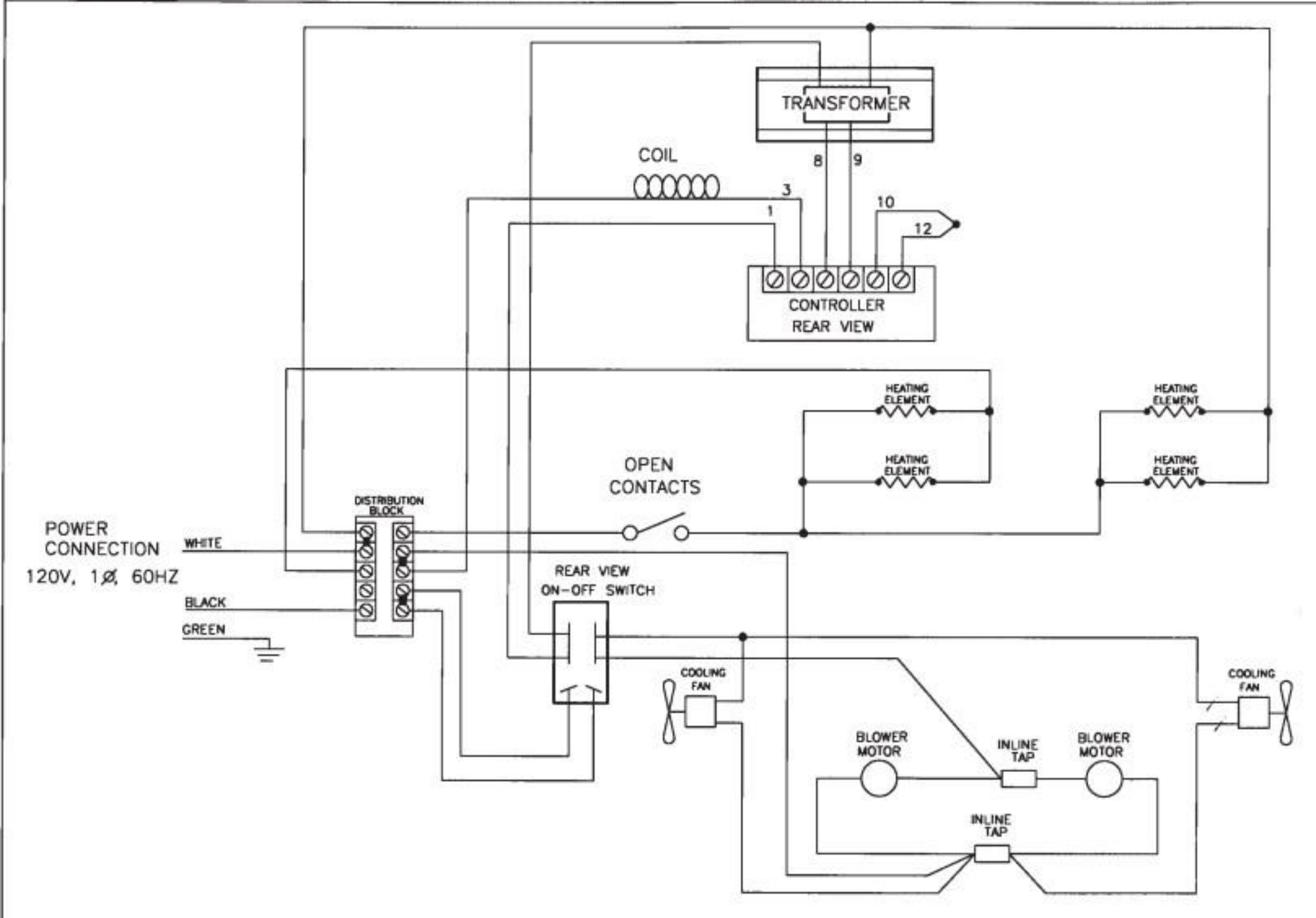
TRANSFORMER
COIL
8
9
3
1
10
12
CONTROLLER
REAR VIEW
HEATING ELEMENT
HEATING ELEMENT
HEATING ELEMENT
HEATING ELEMENT
OPEN CONTACTS
DISTRIBUTION BLOCK
POWER CONNECTION
120V, 1Ø, 60HZ
WHITE
BLACK
GREEN
REAR VIEW ON-OFF SWITCH
COOLING FAN
COOLING FAN
BLOWER MOTOR
INLINE TAP
BLOWER MOTOR
INLINE TAP