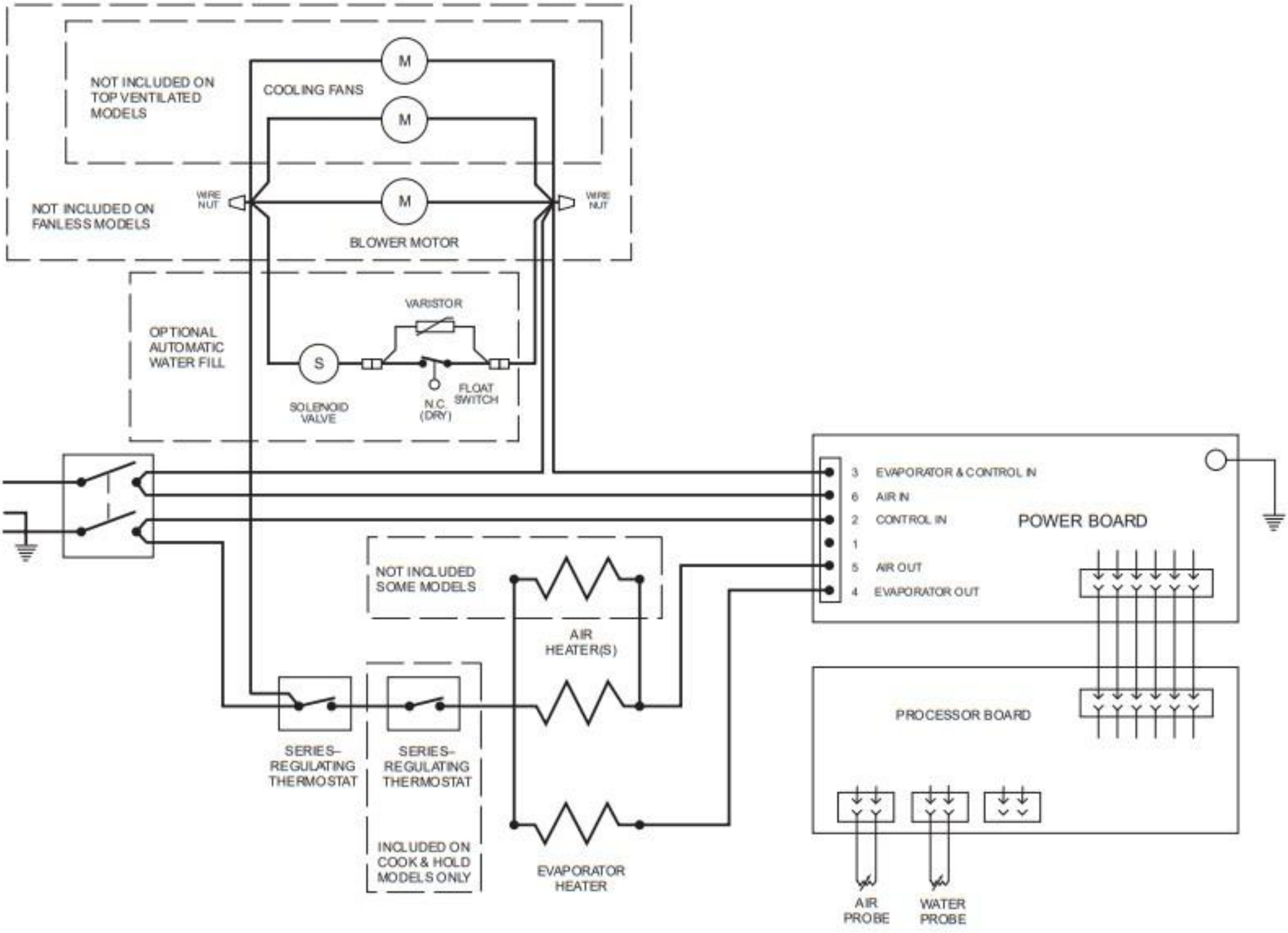
NOT INCLUDED ON TOP VENTILATED MODELS
COOLING FANS
M
M
M
NOT INCLUDED ON FANLESS MODELS
WIRE NUT
WIRE NUT
BLOWER MOTOR
OPTIONAL AUTOMATIC WATER FILL
VARISTOR
S
SOLENOID VALVE
N.C. (DRY)
FLOAT SWITCH
3 EVAPORATOR & CONTROL IN
6 AIR IN
2 CONTROL IN
1
5 AIR OUT
4 EVAPORATOR OUT
POWER BOARD
NOT INCLUDED SOME MODELS
AIR HEATER(S)
SERIES-REGULATING THERMOSTAT
SERIES-REGULATING THERMOSTAT
INCLUDED ON COOK & HOLD MODELS ONLY
EVAPORATOR HEATER
PROCESSOR BOARD
AIR PROBE
WATER PROBE