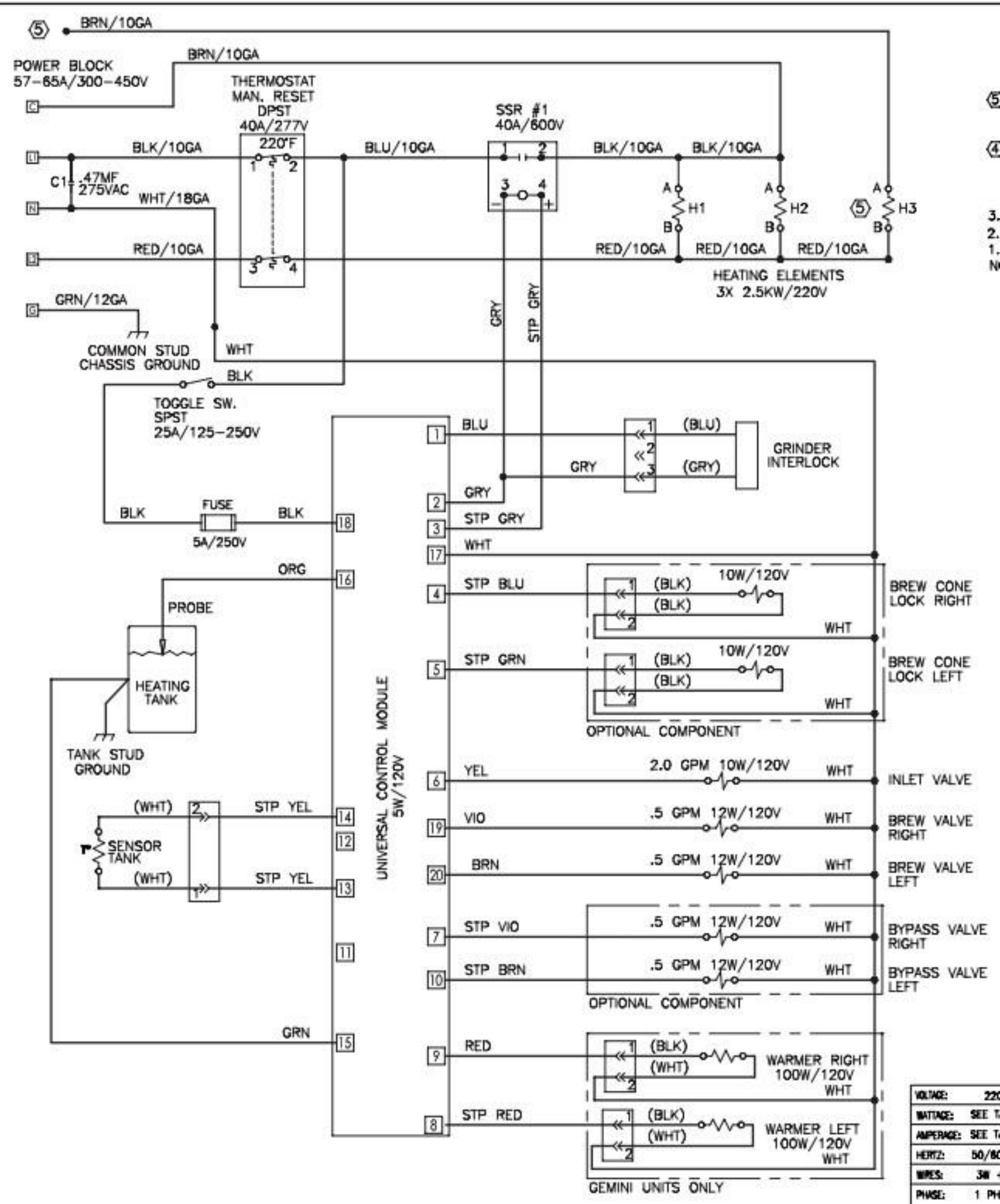
5
BRN/10GA
POWER BLOCK
57-65A/300-450V
C
BRN/10GA
THERMOSTAT
MAN. RESET
DPST
40A/277V
220°F
SSR #1
40A/600V
L1
BLK/10GA
BLU/10GA
BLK/10GA
BLK/10GA
C1 .47MF
275VAC
N
WHT/18GA
H1
H2
5
H3
RED/10GA
RED/10GA
RED/10GA
RED/10GA
HEATING ELEMENTS
3X 2.5KW/220V
G
GRN/12GA
GRY
STP GRY
COMMON STUD
CHASSIS GROUND
WHT
BLK
TOGGLE SW.
SPST
25A/125-250V
BLU
(BLU)
GRINDER
INTERLOCK
GRY
(GRY)
GRY
BLK
FUSE
BLK
5A/250V
STP GRY
WHT
ORG
STP BLU
(BLK)
10W/120V
BREW CONE
LOCK RIGHT
(BLK)
WHT
PROBE
STP GRN
(BLK)
10W/120V
BREW CONE
LOCK LEFT
HEATING
TANK
(BLK)
WHT
OPTIONAL COMPONENT
TANK STUD
GROUND
UNIVERSAL CONTROL MODULE
5W/120V
YEL
2.0 GPM 10W/120V
WHT
INLET VALVE
(WHT)
STP YEL
VIO
.5 GPM 12W/120V
WHT
BREW VALVE
RIGHT
SENSOR
TANK
(WHT)
STP YEL
BRN
.5 GPM 12W/120V
WHT
BREW VALVE
LEFT
STP VIO
.5 GPM 12W/120V
WHT
BYPASS VALVE
RIGHT
STP BRN
.5 GPM 12W/120V
WHT
BYPASS VALVE
LEFT
OPTIONAL COMPONENT
GRN
RED
(BLK)
(WHT)
WARMER RIGHT
100W/120V
WHT
STP RED
(BLK)
(WHT)
WARMER LEFT
100W/120V
WHT
GEMINI UNITS ONLY
VOLTAGE:
WATTAGE:
AMPERAGE:
HERTZ:
WIRES:
PHASE: