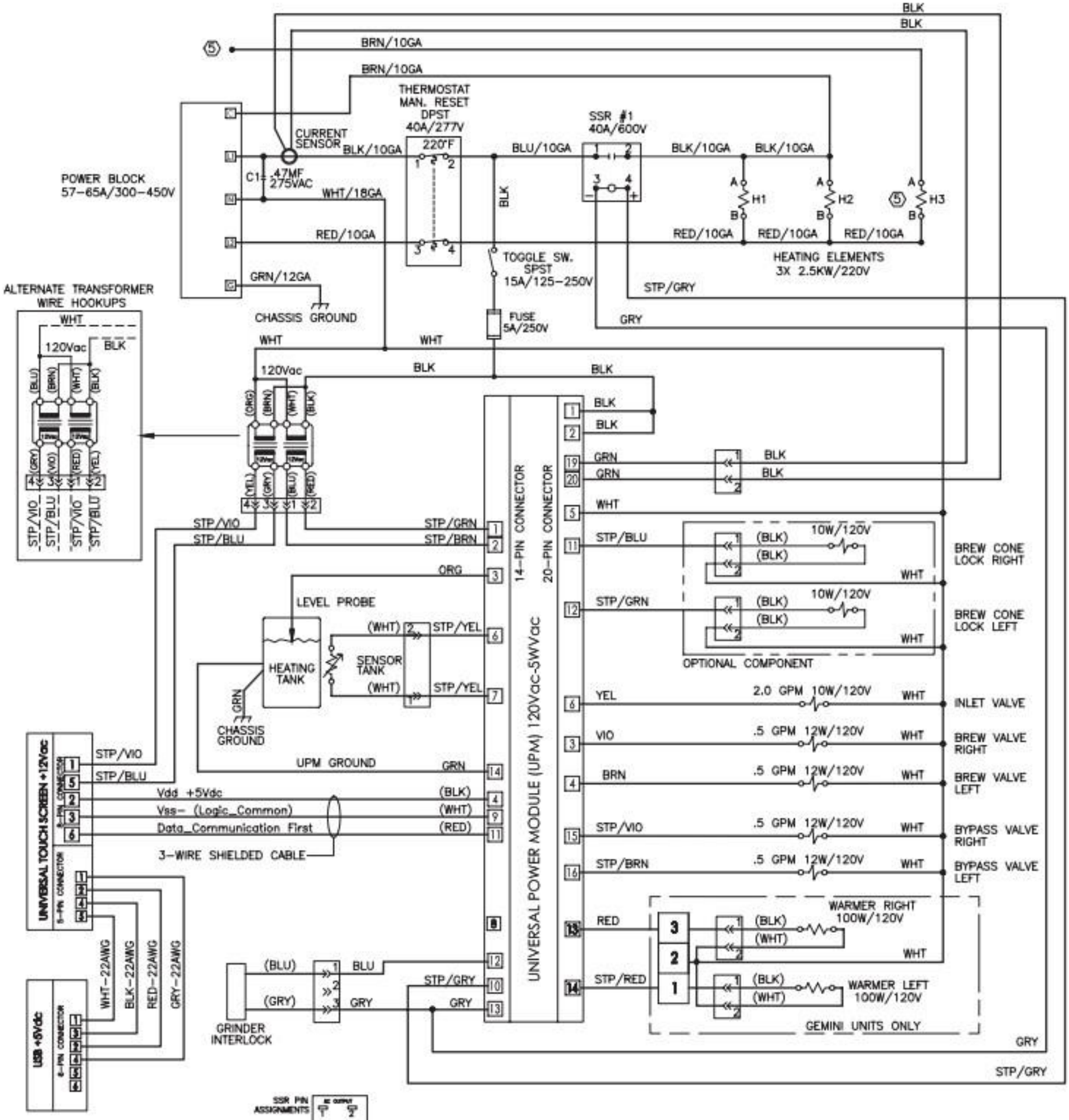
BLK
BLK
BRN/10GA
BRN/10GA
THERMOSTAT
MAN. RESET
DPST
40A/277V
SSR #1
40A/600V
CURRENT
SENSOR
BLK/10GA
220°F
BLU/10GA
BLK/10GA
BLK/10GA
POWER BLOCK
57-65A/300-450V
C1= .47MF
275VAC
WHT/18GA
BLK
H1
H2
H3
RED/10GA
RED/10GA
RED/10GA
RED/10GA
HEATING ELEMENTS
3X 2.5KW/220V
TOGGLE SW.
SPST
15A/125-250V
GRN/12GA
STP/GRY
ALTERNATE TRANSFORMER
WIRE HOOKUPS
CHASSIS GROUND
FUSE
5A/250V
GRY
WHT
WHT
120Vac
BLK
120Vac
BLK
BLK
STP/VIO
STP/BLU
STP/VIO
STP/BLU
STP/GRN
STP/BRN
ORG
14-PIN CONNECTOR
20-PIN CONNECTOR
UNIVERSAL POWER MODULE (UPM) 120Vac-5WVac
LEVEL PROBE
HEATING
TANK
SENSOR
TANK
(WHT)
STP/YEL
(WHT)
STP/YEL
GRN
CHASSIS
GROUND
STP/VIO
STP/BLU
UPM GROUND
GRN
Vdd +5Vdc
(BLK)
Vss- (Logic_Common)
(WHT)
Data_Communication First
(RED)
3-WIRE SHIELDED CABLE
UNIVERSAL TOUCH SCREEN +12Vdc
6-PIN CONNECTOR
USB +5Vdc
6-PIN CONNECTOR
WHT-22AWG
BLK-22AWG
RED-22AWG
GRY-22AWG
(BLU)
BLU
(GRY)
GRY
STP/GRY
GRY
GRINDER
INTERLOCK
GRN
GRN
STP/BLU
10W/120V
(BLK)
(BLK)
WHT
BREW CONE
LOCK RIGHT
STP/GRN
10W/120V
(BLK)
(BLK)
WHT
BREW CONE
LOCK LEFT
OPTIONAL COMPONENT
YEL
2.0 GPM 10W/120V
WHT
INLET VALVE
VIO
.5 GPM 12W/120V
WHT
BREW VALVE
RIGHT
BRN
.5 GPM 12W/120V
WHT
BREW VALVE
LEFT
STP/VIO
.5 GPM 12W/120V
WHT
BYPASS VALVE
RIGHT
STP/BRN
.5 GPM 12W/120V
WHT
BYPASS VALVE
LEFT
RED
WARMER RIGHT
100W/120V
(BLK)
(WHT)
WHT
STP/RED
(BLK)
(WHT)
WARMER LEFT
100W/120V
GEMINI UNITS ONLY
GRY
STP/GRY
SSR PIN
ASSIGNMENTS