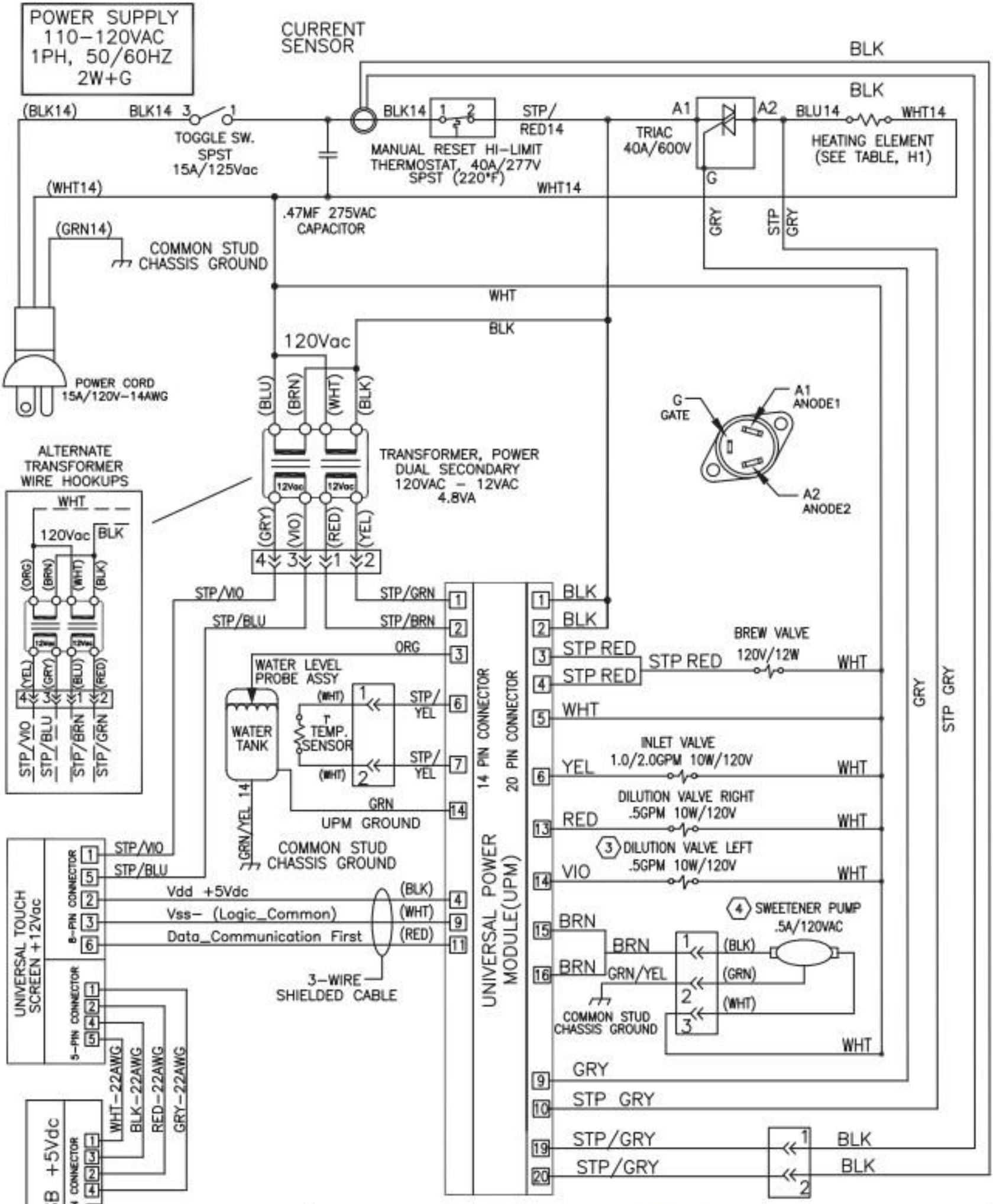

ELECTRICAL RATING TABLE								
Model	Voltage	Amps	Watts	Hertz	# of Conductors	Phase	# of Tank	Tank Element Rating