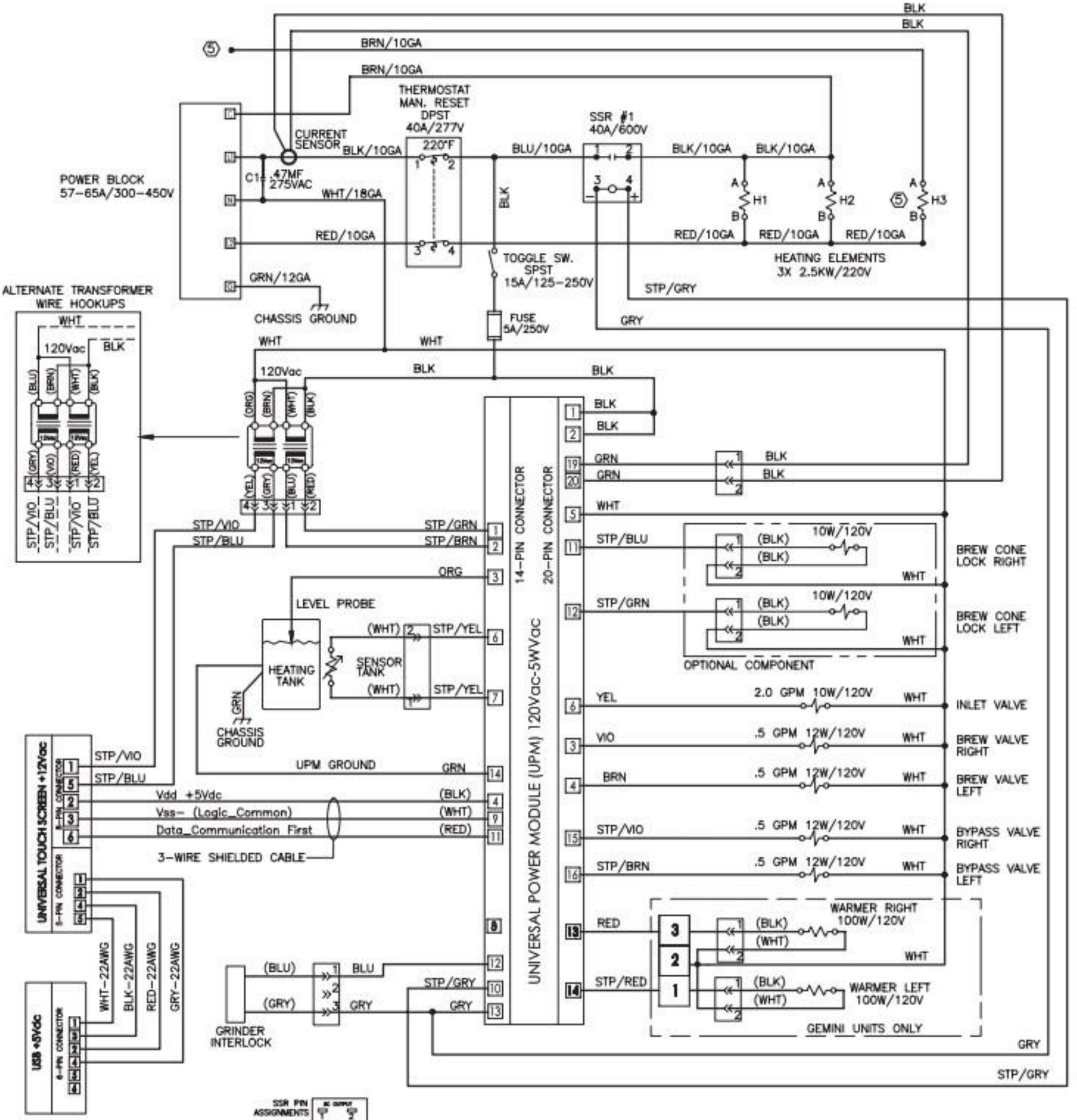
BLK
BLK
BRN/10GA
BRN/10GA
THERMOSTAT
MAN. RESET
DPST
40A/277V
220°F
SSR #1
40A/600V
CURRENT SENSOR
BLK/10GA
BLU/10GA
BLK/10GA
BLK/10GA
POWER BLOCK
57-65A/300-450V
C1 .47MF
275VAC
WHT/18GA
BLK
H1
H2
H3
RED/10GA
RED/10GA
RED/10GA
RED/10GA
HEATING ELEMENTS
3X 2.5KW/220V
TOGGLE SW.
SPST
15A/125-250V
STP/GRY
GRN/12GA
CHASSIS GROUND
FUSE
5A/250V
GRY
ALTERNATE TRANSFORMER
WIRE HOOKUPS
WHT
120Vac
BLK
WHT
WHT
120Vac
BLK
BLK
STP/VIO
STP/BLU
STP/VIO
STP/BLU
STP/GRN
STP/BRN
ORG
LEVEL PROBE
HEATING TANK
SENSOR TANK
(WHT)
STP/YEL
(WHT)
STP/YEL
GRN
CHASSIS GROUND
UPM GROUND
GRN
STP/VIO
STP/BLU
Vdd +5Vdc
Vss- (Logic_Common)
Data_Communication First
(BLK)
(WHT)
(RED)
3-WIRE SHIELDED CABLE
UNIVERSAL TOUCH SCREEN +12Vdc
8-PIN CONNECTOR
WHT-22AWG
BLK-22AWG
RED-22AWG
GRY-22AWG
USB +5Vdc
6-PIN CONNECTOR
(BLU)
BLU
(GRY)
GRY
STP/GRY
GRY
GRINDER INTERLOCK
14-PIN CONNECTOR
20-PIN CONNECTOR
UNIVERSAL POWER MODULE (UPM) 120Vac-5WVac
BLK
BLK
GRN
GRN
BLK
BLK
WHT
STP/BLU
(BLK)
(BLK)
10W/120V
WHT
BREW CONE LOCK RIGHT
STP/GRN
(BLK)
(BLK)
10W/120V
WHT
BREW CONE LOCK LEFT
OPTIONAL COMPONENT
YEL
2.0 GPM 10W/120V
WHT
INLET VALVE
VIO
.5 GPM 12W/120V
WHT
BREW VALVE RIGHT
BRN
.5 GPM 12W/120V
WHT
BREW VALVE LEFT
STP/VIO
.5 GPM 12W/120V
WHT
BYPASS VALVE RIGHT
STP/BRN
.5 GPM 12W/120V
WHT
BYPASS VALVE LEFT
RED
(BLK)
(WHT)
WARMER RIGHT
100W/120V
WHT
STP/RED
(BLK)
(WHT)
WARMER LEFT
100W/120V
GEMINI UNITS ONLY
GRY
STP/GRY
SSR PIN ASSIGNMENTS
DC OUTPUT