WARING COMMERCIAL

Lund 7-Quart Stand Mixer

WSM7L

Unit Information

Watts – 1/2 HP

Limited 2 Yr. Motor Warranty
1 Year Parts & Labor Warranty

11 mixing speeds with variable speed control dial.

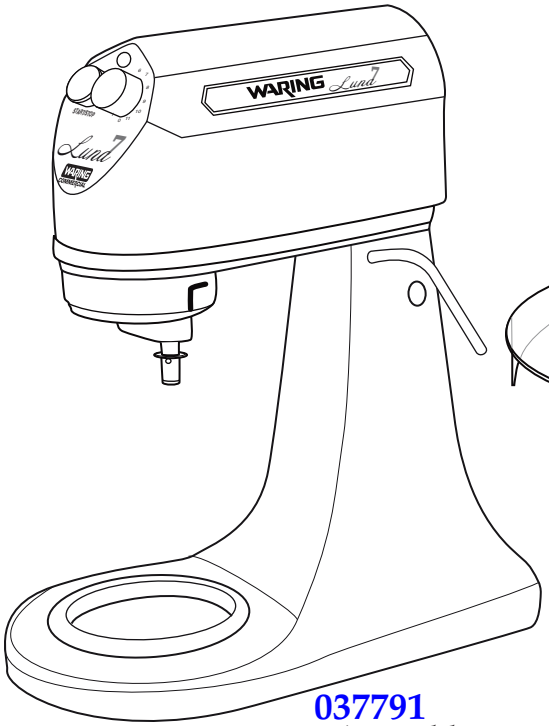

037791
Unit Assembly

037793
Finger Guard

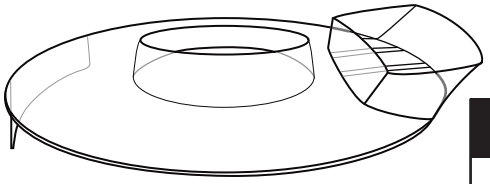

037794
Splash Guard

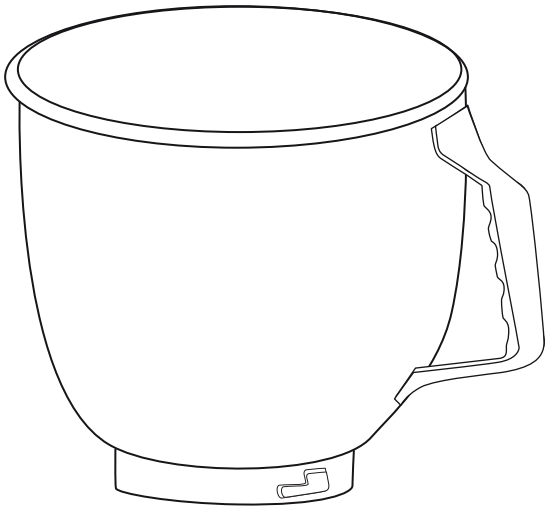

037795 (WSM7LBL)
Bowl

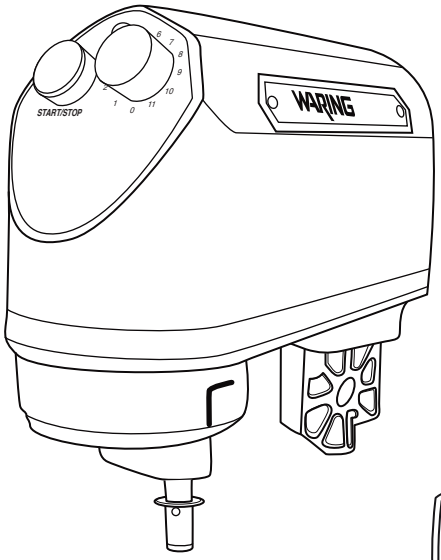

037792
Mixer Head Assembly

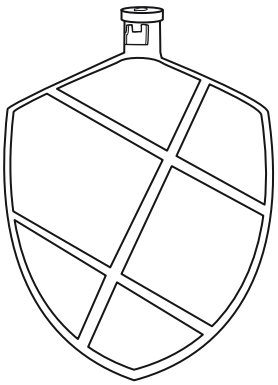

037796 (WSM7LMP)
Mixing Paddle

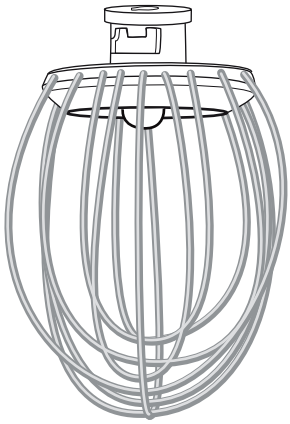

037797 (WSM7LW)
Chef's Whisk

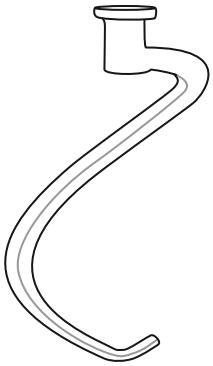

037798 (WSM7LDH)
Dough Hook

Date Code Location→
YY|MM|DD
year year|month month|day day

WARING COMMERCIAL

Unit Components

WSM7L

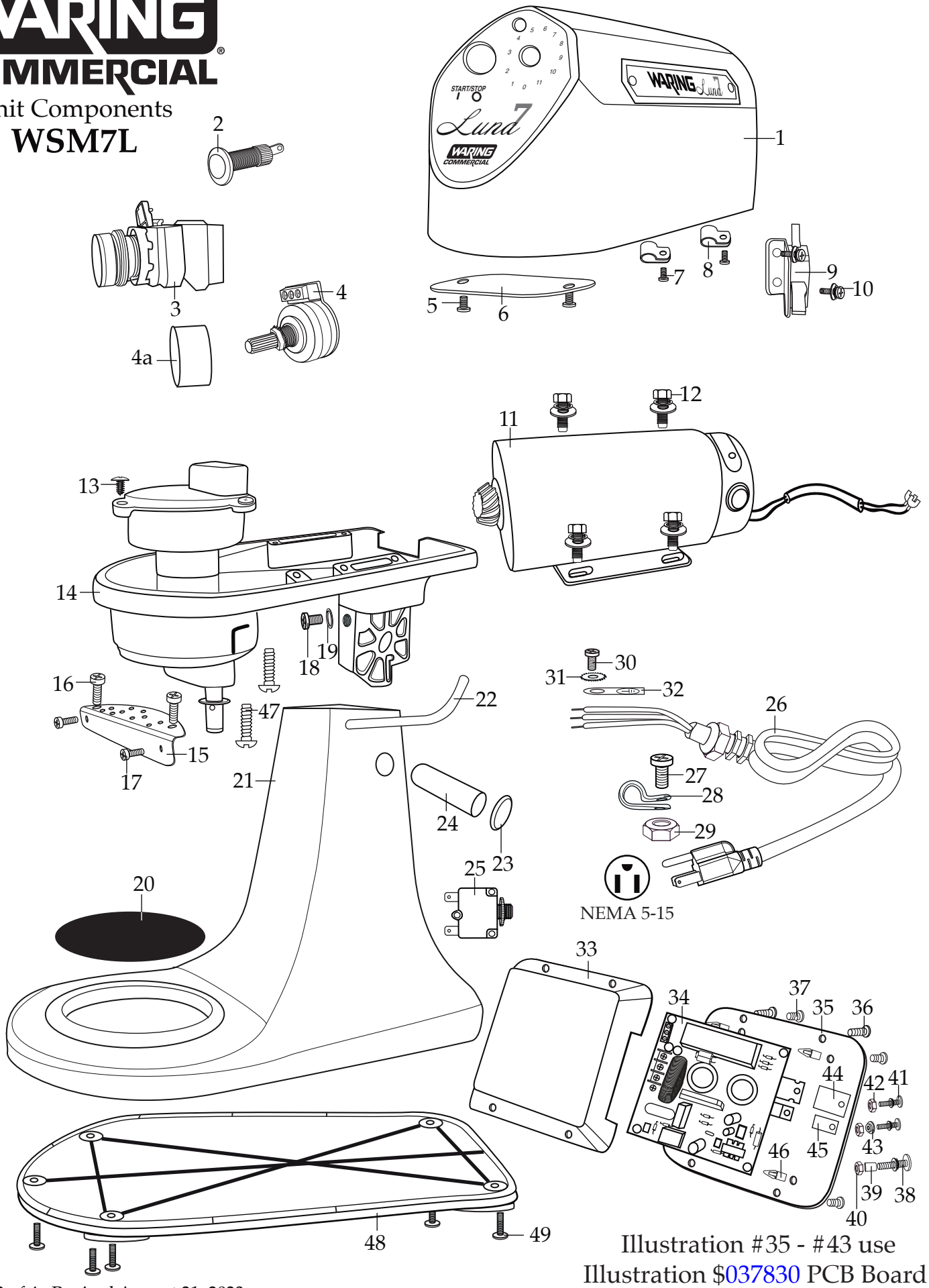

Illustration #35 - #43 use
Illustration $037830 PCB Board

Catalog/Model
WSM7L

WARING COMMERCIAL
314 Ella T. Grasso Ave.
Torrington, CT 06790
Tele. 1-800-269-6640
Fax 860-496-9017
www.waringcommercialproducts.com

Illustration #	Part #	Description
1	037799	Top Cover
2	037800	Light
3	037801	Power Switch
4	037802	Potentiometer
4a	037803	Potentiometer Knob
5	037804	Screw (2 required)
6	037805	Plastic Cover
7	037804	Screw (1 each clamp)
8	037807	Lead Clamp
9	037808	Interlock with Bracket
10	037809	Screw with Washers (2 required)
11	037811	Motor
12	037812	Hex Bolt with Washers (4 required)
13	037813	Screw (3 required)
14	037814	Mixer Head Bottom
15	037815	Screen
16	037816	Screw (2 required)
17	037817	Screw (2 required)
18	037818	Screw
19	037819	Spring Washer
20	037820	Bowl Pad
21	037821	Stand
22	037822	Plum Wrench
23	037823	Shaft Cover (2 required)
24	037824	Shaft
25	037404	Reset Switch
26	037405	Cord
27	037407	Screw
28	037406	Clamp
29	037408	Hex Nut
30	037826	Ground Screw
31	037827	Lock Washer
32	037828	Ground Tag
33	037829	Junction Box

Catalog/Model
WSM7L

WARING COMMERCIAL
314 Ella T. Grasso Ave.
Torrington, CT 06790
Tele. 1-800-269-6640
Fax 860-496-9017
www.waringcommercialproducts.com
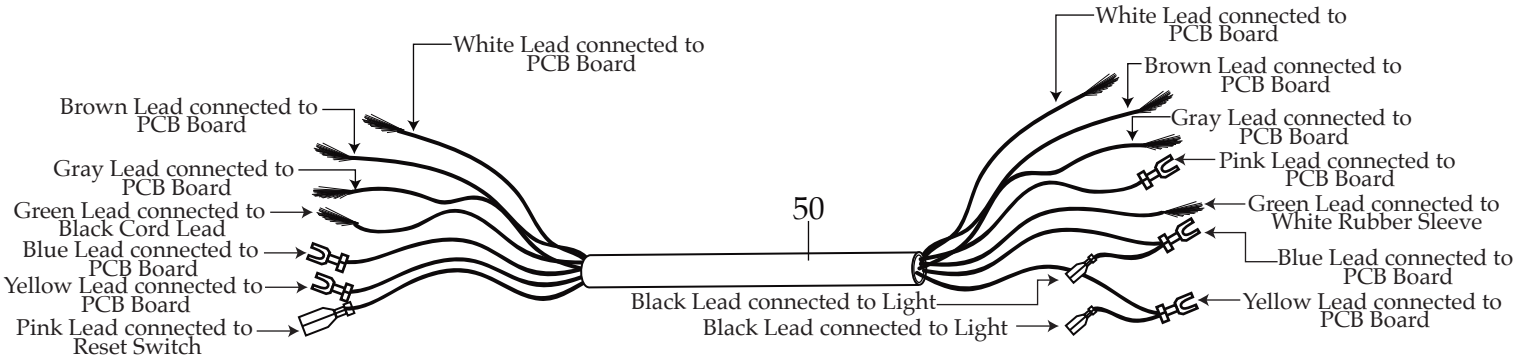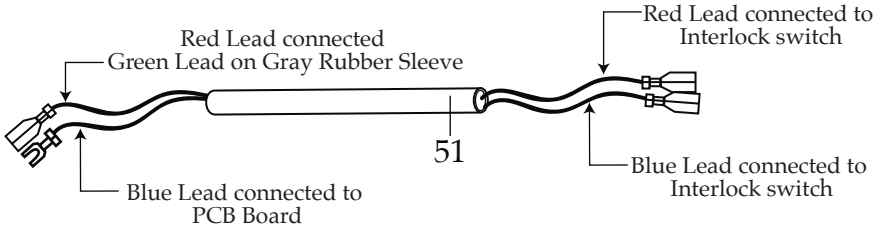
Illustration #	Part #	Description
34	037830	PCB Board
35	037831	Metal Plate
36	037832	Nylon Screw (4 required holds junction box to metal plate)
37	037833	Screw (3 required holds 3 of corners of PCB to metal plate)
38	037834	Screw with Washers (holds the last corner of PCB to metal plate)
39	037835	Spacer (holds the last corner of PCB to metal plate)
40	037836	Hex Nut (holds the last corner of PCB to metal plate)
41	037837	Screw with Washers (2 required holds mosfets on PCB to metal plate)
42	037836	Hex Nut (2 required holds mosfets on PCB to metal plate)
43	037838	Ceramic Seal (holds mosfets on PCB to metal plate
44	037839	Large Rubber Mat (under large mosfet)
45	037840	Small Rubber Mat (under small mosfet)
46	037841	Push Spacer Stand Offs (3 required under 3 of corners of PCB)
47	037842	Screw (2 required)
48	037843	Bottom Plate with Feet
49	037844	Screw (5 required)
50	037810	Gray Rubber Sleeve with Leads
51	037825	White Rubber Sleeve with Leads