# Unit Information

2 HP – 1500 watt – 24,000 Max RPM

48 oz. Stackable
Break Resistant Container

Limited 2 Year Warranty

WARING COMMERCIAL

TORQ 2.0 Blender
with 2 Toggle Switches

# TBB145

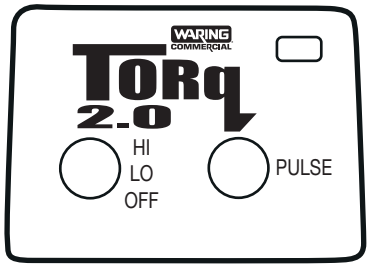


**035122**
Control Panel Overlay

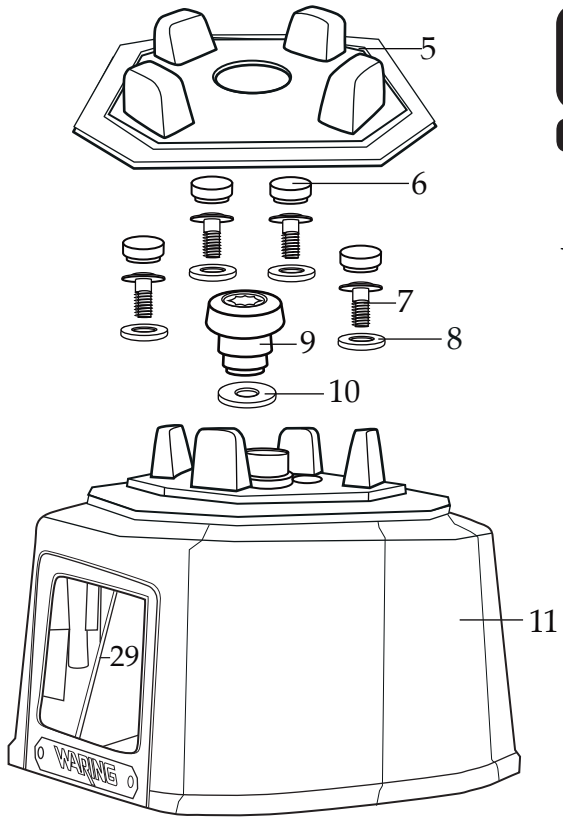


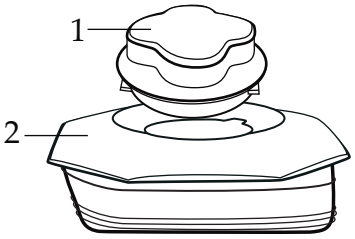


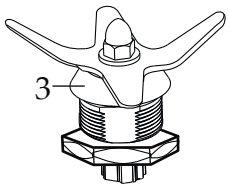


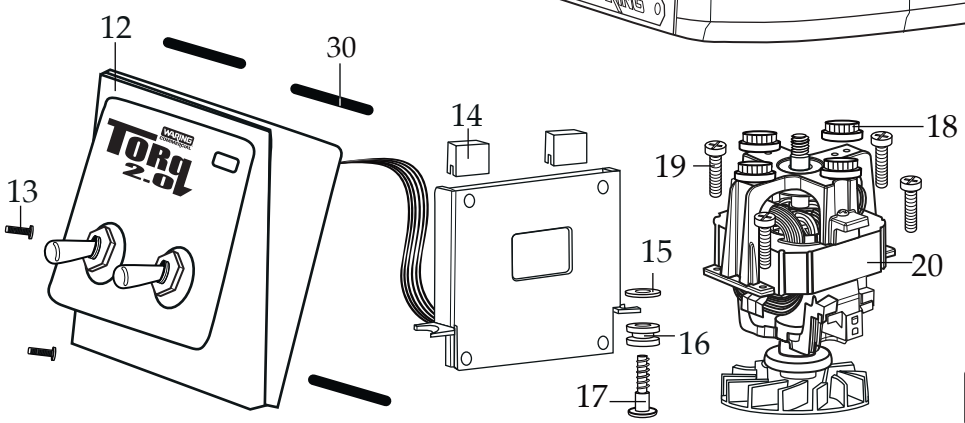


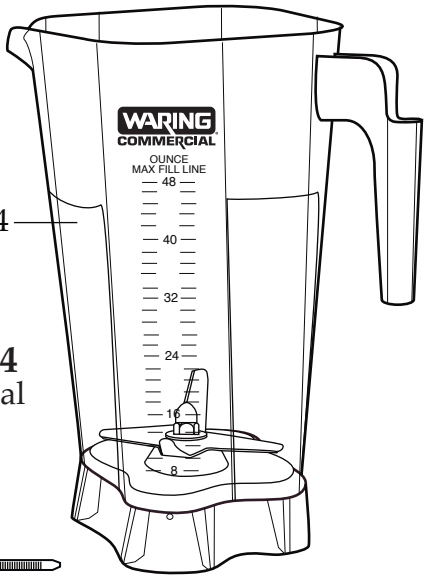


**013304**
NSF Seal

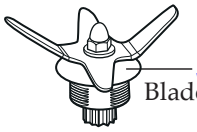

**503481**
Blade Assembly

**024271**
O Ring

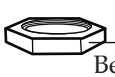

**035307**
Bearing Holder Nut

**035465**
Blending Assembly
(with O ring and bearing holder nut)

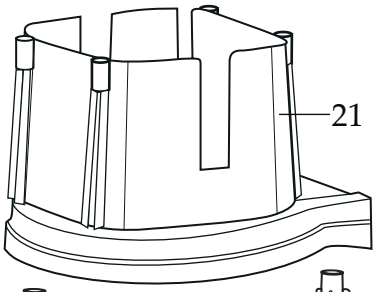

**503482**
Container with Blending Assembly

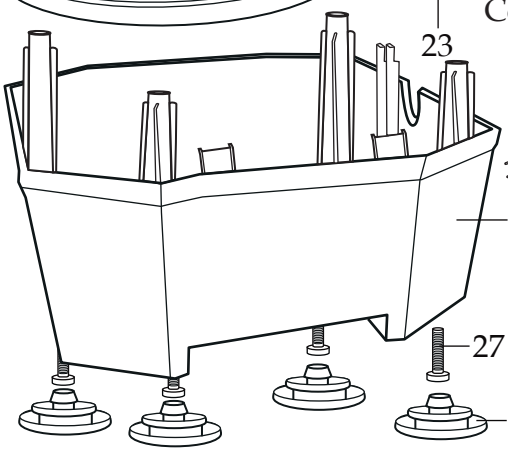


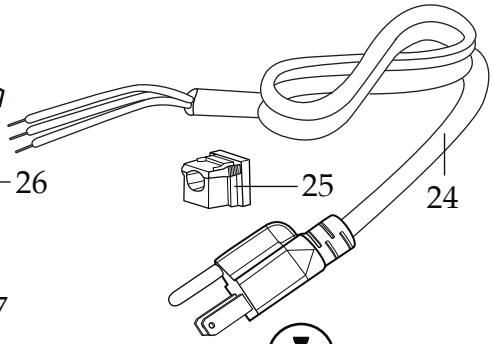


NEMA 5-15

Date Code Location
YY|MM|DD
year year|month month|day day

**Catalog/Model**
TBB145

WARING COMMERCIAL
314 Ella T. Grasso Ave.
Torrington, CT 06790
Tele. 1-800-269-6640
Fax 860-496-9017
www.waringcommercialproducts.com

| Illustration# | Part# | Description |
|---|---|---|
| 1 | 028769-E | Eastman Jar Lid Cover |
| 2 | 035238-V | Vinyl Jar Lid |
| 3 | 035465 | Blending Asssembly (with O ring and bearing holder nut) |
| 4 | 035239 | 48 oz. Stackable Container ONLY |
| 5 | 035885 | Jar Pad |
| 6 | 035085 | Hole Plug (4 required) |
| 7 | 034275 | Sems (4 required) |
| 8 | 034273 | B Gasket (4 required) |
| 9 | 037034<br>035251 | Drive Coupling 2 Gen. *(on units after 11/15/2019)*<br>Drive Coupling |
| 10 | 037033 | Coupling Washer *(on units after 11/15/2019)* |
| 11 | 503609<br>503460-145 | Top Housing with Badge *(on units after 7/24/2021)*<br>Top Housing Assembly |
| 12 | 038164<br>035160 | Control Panel (*on units after 7/24/2021)*<br>Control Panel Assembly |
| 13 | 035090 | Screw (2 required) |
| 14 | 034900 | PCB Cushion (2 required) |
| 15 | 013604 | Washer (2 required) |
| 16 | 034904 | Rubber Grommet (2 required) |
| 17 | 034902 | Sems (2 required) |
| 18 | 034272 | A Gasket (4 required) |
| 19 | 034274 | Screw (4 required) |
| 20 | 035815<br>034276 | Chiaphua Motor *(on units after 6/4/2021)*<br>ECM Motor / KB500 |
| 21 | 503483 | Motor Housing with Dampeners |
| 22 | 013731 | Cable Ties (6 required *on units after 8/16/2016)* - (2 required) |
| 23 | 012409<br>019123 | Small Crimp Connectors (5 required *on units after 8/25/2016)* - (4 required)<br>Large Crimp Connector (2 required *on units after 8/16/2016)* - (1 required) |
| 24 | 035124 | Cordset |
| 25 | 033619 | Strain Relief |
| 26 | 035079<br>503480 | Bottom Housing ONLY<br>Bottom Housing Assembly with Feet |
| 27 | 034274 | Screw (4 required) |

**Catalog/Model**
TBB145

WARING COMMERCIAL
314 Ella T. Grasso Ave.
Torrington, CT 06790
Tele. 1-800-269-6640
Fax 860-496-9017
www.waringcommercialproducts.com

| Illustration# | Part# | Description |
|---|---|---|
| 28 | 035088 | Foot (4 required) |
| 29 | 033737 | O Ring *(on units from 11/23/2021 thru 4/25/2022)* |
| 30 | 038614 | Back Bezel Seal (3 required *on units after 8/11/2022*) |

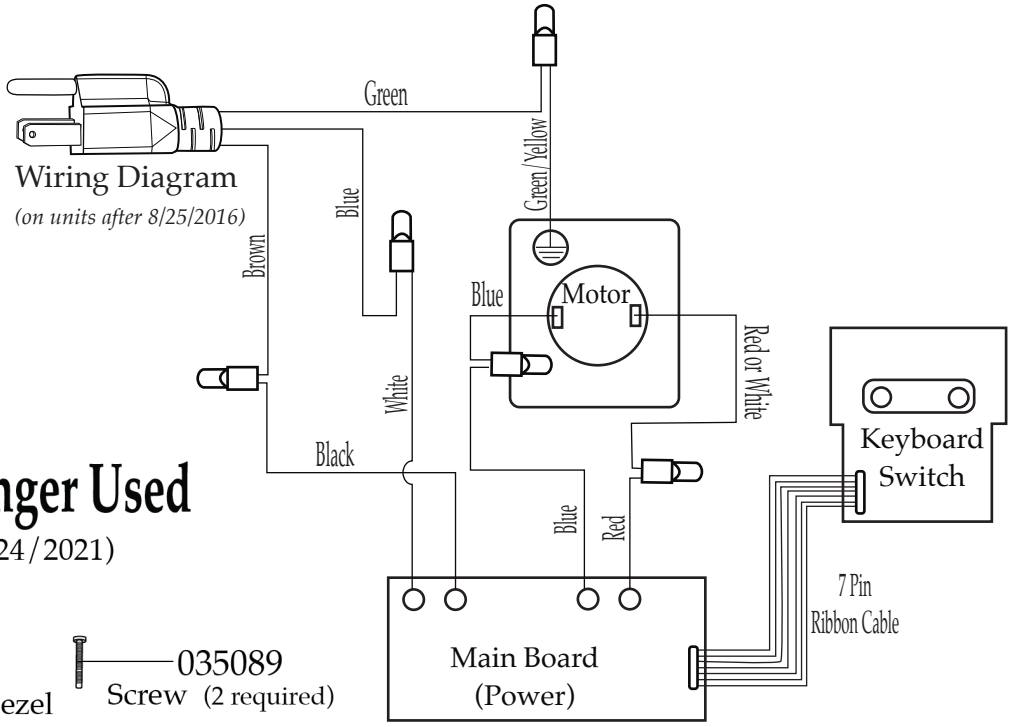


## Parts No Longer Used

(last used 7/24/2021)

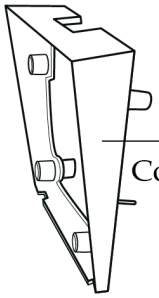

035083
Control Housing Back Bezel



035089
Screw (2 required)



035255
Washer (2 required)

035253
LED Lens

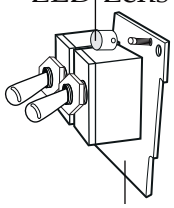
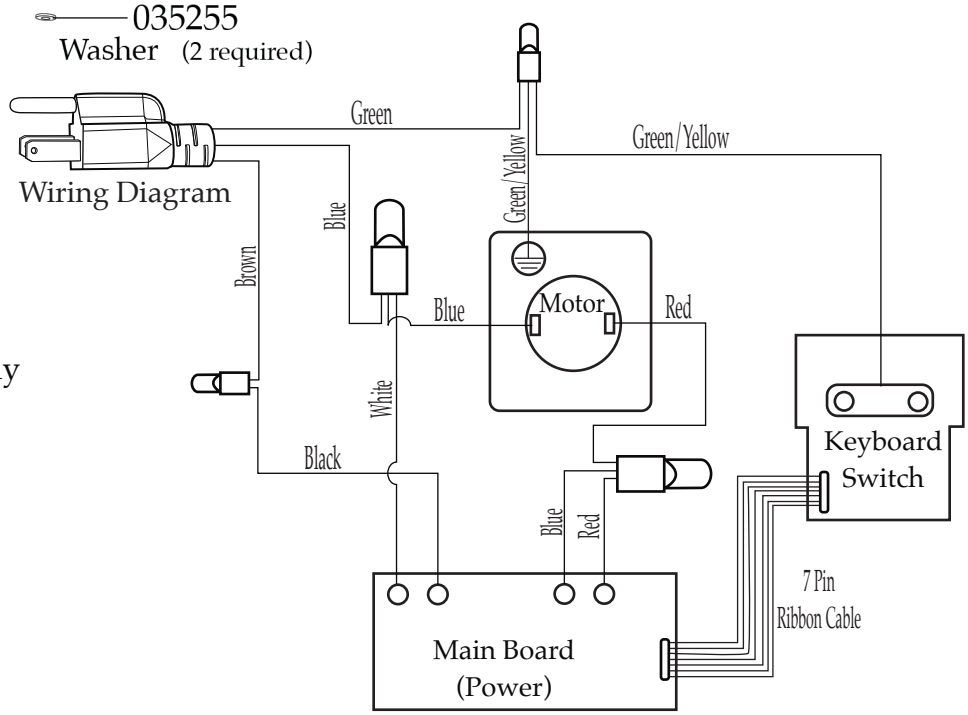
035160
TBB145 Control Panel Assembly