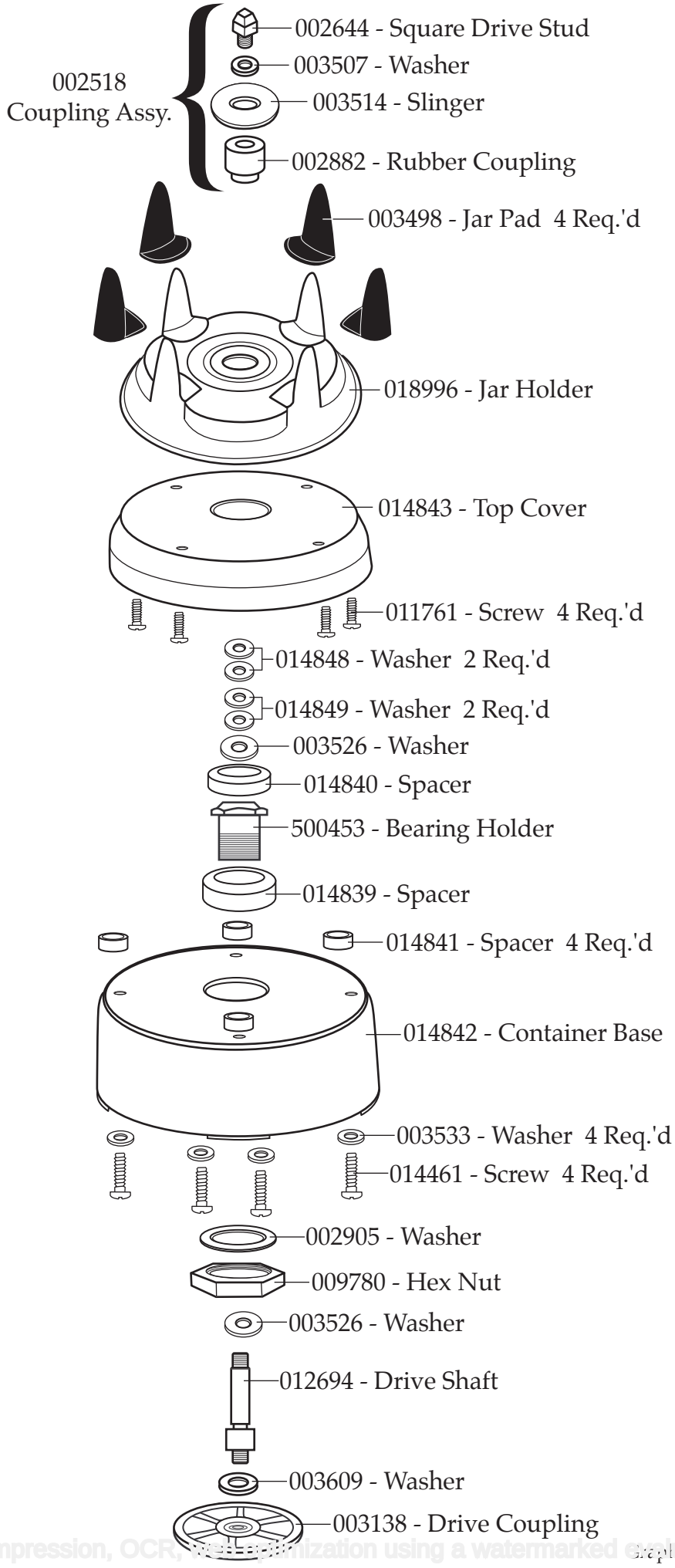

WARING COMMERCIAL®

AD2

Jar Adapter that allows you to use smaller square drive containers on a Half Gallon Blender.

PDF compression, OCR, web optimization using a watermarked evaluation copy of CVISION PDFCompressor