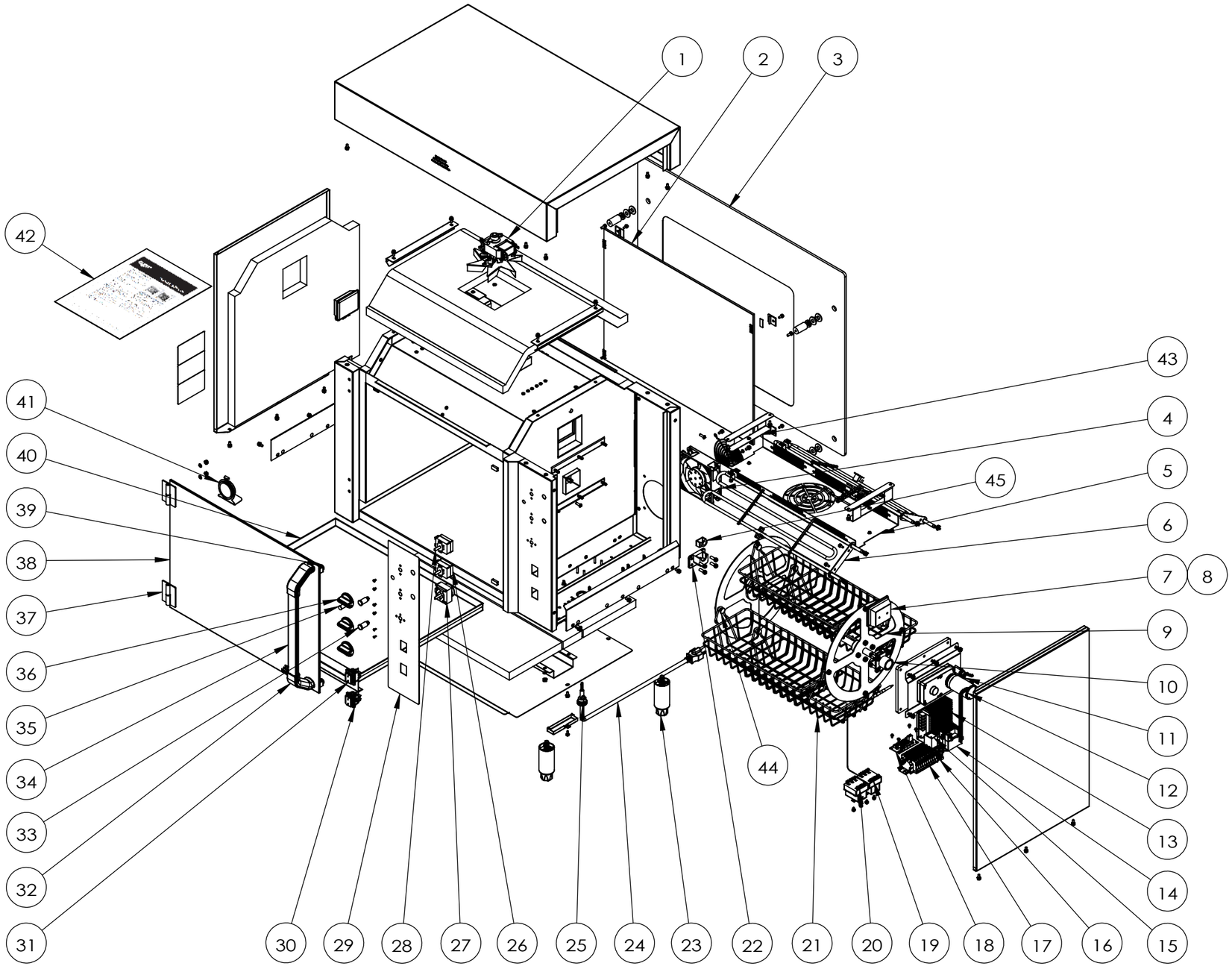

 ©2022 Document No. RO4-208240-8 Rev. B

SN	ITEM NO.	DESCRIPTION	QTY.
45	354906-1	CERAMIC INSERT	1
44	354776-1	BASKET RETAINING PIN	8
43	354775-1	FAN COVER SUPPORT ASSY	2
42	354185-1	ROTISSERIE MANUAL	1
41	353871-1	24HP-01-1 THERMOMETER	1
40	353844-1	DRIP TRAY ASSY 8-BIRD	1
39	353869-1	ROUND MAGNET	1
38	353845-1	8-BIRD GLASS DOOR ASSY	1

SN	ITEM NO.	DESCRIPTION	QTY.
37	353867-1	LEFT HINGE	2
36	351788-06-1	KNOB	3
35	353853-1	PILOT LIGHT SMALL LH680	1
34	353870-1	HANDLE EXTRUSION	1
33	353854-1	PILOT LIGHT LARGE LH580	2
32	353868-1	HANDLE END CAP	2
31	353855-1	DC SWITCH GOLD-PLATED	1
30	352774-1	220V SWITCH	1
29	353840-1	OVERLAY	1
28	353857-1	COOK THERMOSTAT 230°C/450°F	1
27	353858-1	TIMER	1
26	353856-1	HOLD THERMOSTAT 150°C/300°F	1
25	B400320	STRAIN RELIEF ROUND HEYCO-#1247	1
24	353841-1	CORD 8-BIRD	1
23	2351601-1	HEAVY DUTY 4" LEG	4
22	353883-1	LEFT CAROUSEL HOLDER	1
21	353843-1	8-BIRD BASKET	4
20	353859-1	HIGH LIMIT THERMOSTAT 270°C	1
19	353860-1	HIGH LIMIT THERMOSTAT 82°C	1
18	353887-1	MOTOR CONTROL PCB ASSY	1
17	353861-1	TERMINAL BLOCK AND RELAY ASSY	1
16	353862-1	RELAY MOUNT	1
15	353863-1	RELAY	1
14	353864-1	ELEMENT CONTACTOR (2 POLE) FOR 8-BIRD	1
13	353886-1	MEAN WELL RS-50-24 POWER SUPPLY	1
12	353839-1	MOTOR ASSY	1
11	353885-1	COOLING FAN THERMOSTAT 50°C	1
10	N/A	RIGHT CAROUSEL HOLDER	1
9	353842-1	CAROUSEL ASSY 8-BIRD	1
8	353866-1	OVEN LIGHT BULB 230V 25W	2
7	353865-1	OVEN LIGHT 230V 25W	2
6	353851-1	HEATING ELEMENT 8-BIRD	2
5	353852-1	FAN COVER KIT 8-BIRD	1
4	353846-1	COOLING FAN	1
3	353850-1	8-BIRD EXTERNAL GLASS	1
2	353849-1	8-BIRD INTERNAL GLASS	1
1	353847-1	CONVECTION FAN	1

©2022 Document No. RO4-208240-8 Rev. B