Operator's Manual

Low-Profile Heat Strips

WARNING

Fire, Injury, Death Hazard.
Correct precautions, procedures and regulations for usage must be followed. Operation and safety training is necessary for all users of this equipment

Thank you for purchasing this Vollrath® product! Save this manual for reference and the packaging in case shipping is necessary.



Item	Description
FC-4SH	Low-Profile Heat Strip 120V or 208V, 18" – 84"
Accessories	**Description**
353028-2	1" Mounting Bracket
353029-2	2" Mounting Bracket

SAFETY PRECAUTIONS

To help ensure safe use, please read and fully understand this manual and all safety messages before operation!

WARNING

Warning indicates a hazardous situation which, if not avoided, could result in death or serious injury.

CAUTION

Caution indicates a hazardous situation which, if not avoided, could result in minor or moderate injury.

NOTICE: addresses practices not related to physical injury.

To reduce risk of injury or damage to the unit

- Use only grounded electrical circuits matching the nameplate-rated voltage.
- Use equipment in a flat, level position.
- Do not spray equipment with liquids or foams.
- Keep equipment and wiring away from open flames, electric burners, and excessive heat.
- Do not operate unattended.
- Do not operate if equipment is damaged or malfunctioning.

FUNCTION AND PURPOSE

Strips are designed to maintain preheated food at proper serving temperatures between 104 °F (40 °C) and 165 °F (74 °C). They are not intended or designed to cook raw food or reheat prepared food — nor are they intended for household, industrial or laboratory use.

CLEARANCE, CODES, AND REQUIREMENTS

- This unit must be installed where heat will not damage surfaces or other surrounding materials. Damages that occur in the heat zone of this product are not covered under warranty.
- Refer to the following Clearance Table for safe spacing.
- Heat strips have been evaluated for use above steam tables.
- Each unit must be hard-wired into a dedicated circuit that matches the label rating found on the front of the heat strip.
- Stock-wire leads are rated 450 °C minimum and must not be replaced with lower-temperature wire.
- All wiring between food warmer and control box must be enclosed immediately in conduit or other material that meets or exceeds state and local codes.

Clearance Minimum	Non-Combustible Surface (Uncoated Strip)	Non-Combustible Surface (Coated Strip)	Combustible Surface
Top of strip to surface above	1" (2.5 cm)	2" (5.1 cm)	2" (5.1 cm)
Side of strip to adjacent surface	1" (2.5 cm)	4" (10.2 cm)	5" (12.7 cm)
End of strip to adjacent surface	1" (2.5 cm)	1" (2.5 cm)	4" (10.2 cm)
Bottom of strip to surface below	11" (27.9 cm)	16" (40.6 cm)	18" (45.7 cm)

INSTALLATION

Heat Strip

1. In a location that supports the weight of the unit, mark the center-mount bracket holes. Units come with 3" brackets; 1" and 2" brackets are available separately.

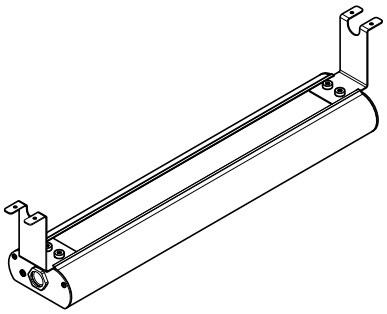

2. Secure the top-mount brackets to the mounting holes using lock washers and screws; repeat on the other end.
3. Mount brackets and unit to a suitable surface.
4. For most effective heating, mount the bottom of the strip approximately 16" above the countertop. Refer to the Clearance Table for acceptable mounting heights.

Control Box

1. In the cabinet/structure where the heat strip is installed, cut a 7.50" W x 3.13" H rectangle.
2. Drill four ¼" mounting holes spaced 8" W by 3.65" H, centered around the cutout.

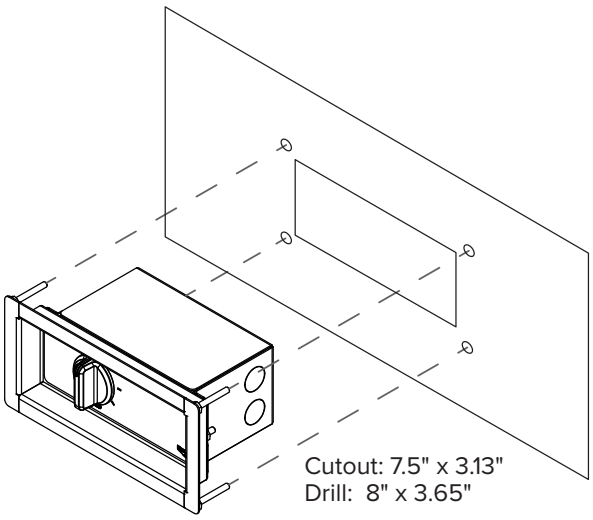

3. Insert the control box into the mounting holes and secure it with the provided lock nuts.

OPERATION

⚠ WARNING

Burn Hazard.
Do not touch cookware, heating surface, food, or liquid while operating. Allow unit to cool completely before handling.

⚠ WARNING

Fire Hazard.
Do not install strip too close to combustibles or place combustible material directly under or on top of unit. Refer to the preceding Clearance Table for safe spacing requirements.

⚠ WARNING

Electrical Shock Hazard.
Keep liquids from getting inside the unit. Do not immerse or spray unit or wiring in/with liquid or foam — this could cause an electrical shock. Do not use if the unit is damaged or modified.

Unit must be installed by qualified personnel in accordance with all local and national ordinances and codes and must comply with UL COA.

NOTICE: Certain materials such as foam or plastic could melt if left in the heat zone and food will dry out if left under the strip for an extended time.

1. Make sure there are no combustibles near the strip.
2. Preheat the strip for about 15 minutes by turning it on with the Power Switch or by turning the Infinite Heat Control Knob to the desired setting.
3. Place prepared, warm food under the strip.
4. Check food temperature regularly and adjust as needed.
5. When not in use, turn the unit off with the Power Switch or Infinite Heat Control Knob.



Power Switch



Infinite Heat Control Knob

NOTICE: Monitor food temperature closely for food safety. The United States Public Health Service recommends that hot food be held at a minimum of 140 °F (60 °C) to help prevent bacteria growth. Maintain correct steam table water levels and temperatures; periodically remove food containers, check the water, and replenish as needed.

CLEANING



⚠ WARNING

Burn Hazard.
Allow unit to cool before moving or cleaning.



⚠ WARNING

Electrical Shock Hazard.
Keep liquids from getting inside the unit. Do not immerse or spray unit or wiring in/with liquid or foam — this could cause an electrical shock.

3. Turn the unit off with the Power Switch or Infinite Heat Control Knob and allow the strip to cool completely.
4. Use a damp cloth or sponge dipped in soapy water to wipe down the unit; use only non-abrasive materials and cleansers to avoid damaging the finish.
5. Rinse and dry thoroughly to avoid corrosion.

TROUBLESHOOTING

Problem	Potential Cause	Course of Action
Unit does not have power.	Unit is not on.	Turn the unit on with the Power Switch or Infinite Heat Control Knob.
	Controls are burned out or defective.	Contact an authorized service agent.
	Circuit breaker tripped.	Reset the circuit breaker.
Unit is not heating.	Heating element or wiring is faulty.	Contact an authorized service agent.
Unit is on but heat is too low.	Unit is mounted too high above heating zone.	Reference Clearance Table and remount strip lower.
	There is too much cold air near food or unit.	Restrict or redirect cold air.
	Supply voltage is too low.	Ensure supply voltage matches nameplate rating.
Control switches burn out repeatedly.	Control Box is mounted too close to heat zone.	Check that the ambient temperature near the box is less than 104 °F (40 °C); if higher, contact a licensed electrician or contractor to relocate the box.

SERVICE AND REPAIR

Serviceable parts are available on vollrathfoodservice.com.

To avoid serious injury or damage, never attempt to repair the unit or replace a damaged power cord yourself. Do not send units directly to The Vollrath Company LLC. Please contact Vollrath Technical Services for instructions.

When contacting Vollrath Technical Services, please be ready with the item number, model number (if applicable), serial number, and proof of purchase showing the date the unit was purchased.

WARRANTY STATEMENT FOR THE VOLLRATH CO. L.L.C.

This warranty does not apply to products purchased for personal, family or household use, and The Vollrath Company LLC does not offer a written warranty to purchasers for such uses.

The Vollrath Company LLC warrants the products it manufactures or distributes against defects in materials and workmanship as specifically described in our full warranty statement. In all cases, the warranty runs from the date of the end user's original purchase date found on the receipt. Any damages from improper use, abuse, modification, or damage resulting from improper packaging during return shipment for warranty repair will not be covered under warranty.

For complete warranty information, product registration, and new product announcements, visit vollrathfoodservice.com.

The Vollrath Company, L.L.C. Headquarters
1236 North 18th Street
Sheboygan, Wisconsin 53081-3201 USA
Main Tel: 800-319-9549 or 920-457-4851
Main Fax: 800-752-5620 or 920-459-6573
Canada Customer Service: 800-695-8560
Tech Services: techservicereps@vollrathco.com
vollrathfoodservice.com

Pujadas Vollrath of China
Ctra. de Castanyet, Vollrath Shanghai Trading 132
P.O. Box 121 Limited
17430 Santa Coloma de Farners 23A
Time Square Plaza | 500
(Girona) – Spain Zhang Yang Road
Tel. +34 972 84 32 01 Pudong, Shanghai 200122
info@pujadas.es Tel: 86-21-5589580

Vollrath de Mexico S. de R.L.
de C.V. Periferico Sur No.
7980 Edificio 4-E Col. Santa
Maria Tequepexpan 45600
Tlaquepaque, Jalisco | Mexico
Tel: (52) 333-133-6767
Tel: (52) 333-133-6769
Fax: (52) 333-133-6768

© 2023 The Vollrath Company L.L.C.