5 WELL HOT, INFINITE CONTROL WIRING DIAGRAM 208-240V

Item Number
36408
36475
3640801
3640850
3640851
3640860
3640861
3647550
3647560
3640801HD
3640850HD
3640851HD
3640860HD
3640861HD
36408HD
3647550HD
3647560HD
36475HD
FC-4DH-05208-I

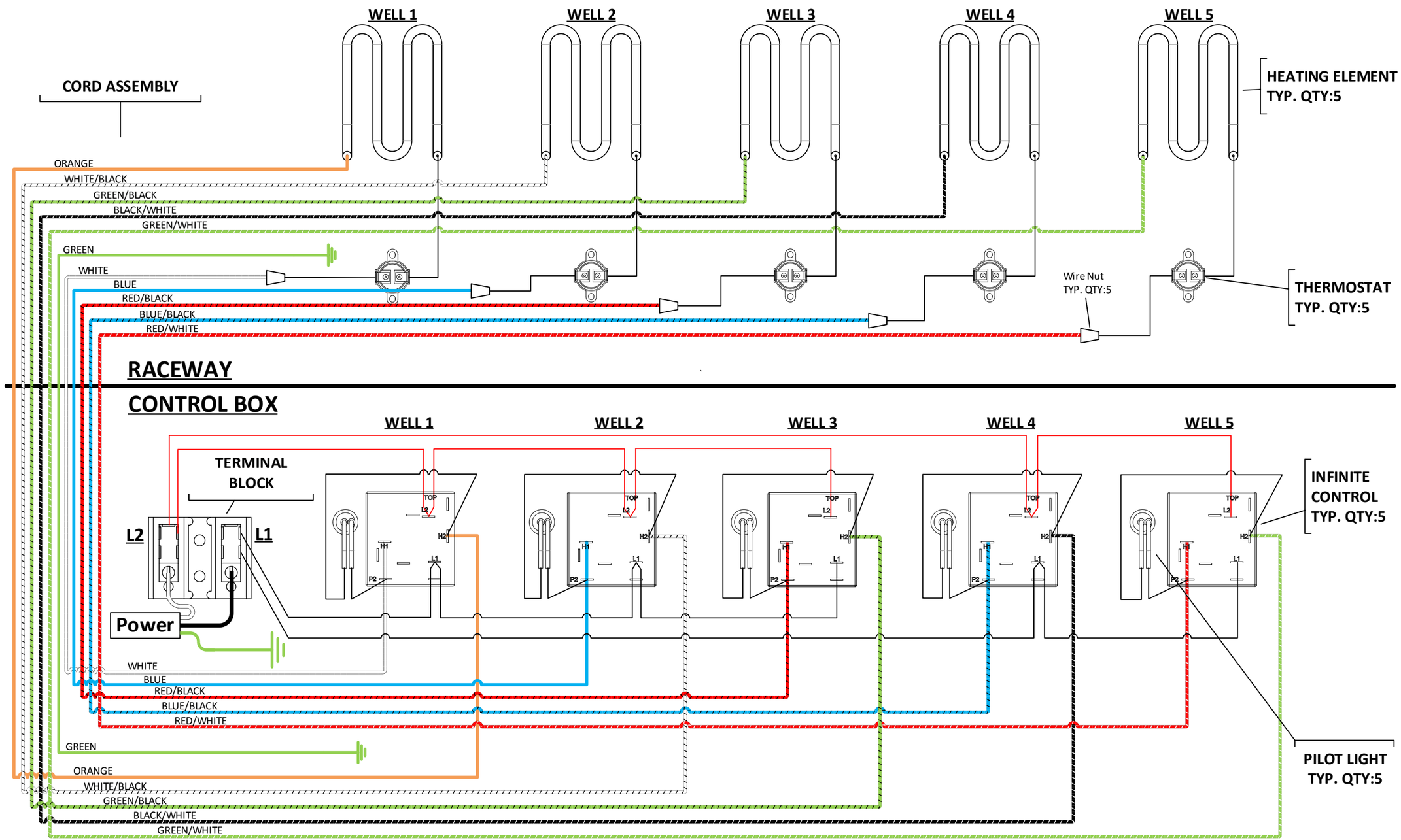

INFINITE CONTROL SCHEMATIC

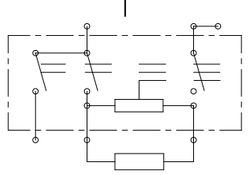

©2017