SERVICE MANUAL



VC4G & VC6G SERIES FULL SIZE CONVECTION OVENS

VC4GS	ML-126610
VC4GD	ML-126611
VC4GC	ML-136494
VC6GS	ML-126612
VC6GD	ML-126613
VC6GC	ML-136495

- NOTICE -

This Manual is prepared for the use of trained Hobart Service Technicians and should not be used by those not properly qualified.

This manual is not intended to be all encompassing. If you have not attended a Hobart Service School for this product, you should read, in its entirety, the repair procedure you wish to perform to determine if you have the necessary tools, instruments and skills required to perform the procedure. Procedures for which you do not have the necessary tools, instruments and skills should be performed by a trained Hobart Service Technician.

The reproduction, transfer, sale or other use of this manual, without the express written consent of Hobart, is prohibited.

This manual has been provided to you by ITW Food Equipment Group LLC ("ITW FEG") without charge and remains the property of ITW FEG, and by accepting this manual you agree that you will return it to ITW FEG promptly upon its request for such return at any time in the future.

TABLE OF CONTENTS

SERVICE UPDATES 4
SERVICE UPDATES - VC4G / VC6G 4
TIS DOCUMENT LIST - VC4G AND VC6G 4

GENERAL 6
INTRODUCTION 6
INSTALLATION, OPERATION AND CLEANING 6
OPERATION 6
CLEANING 6
REFERENCE INFORMATION 6
LUBRICATION 6
SPECIFICATIONS 6
TOOLS 6

REMOVAL AND REPLACEMENT OF PARTS 7
COVERS AND PANELS 7
TOP FRONT COVER 7
BOTTOM FRONT COVER 7
CONTROL PANEL 7
RIGHT SIDE PANEL 7
CONTROL PANEL COMPONENTS 8
COMPONENT PANEL COMPONENTS 8
TEMPERATURE PROBE 9
GAS BURNER 9
GAS ORIFICE 10
GAS SOLENOID VALVE 11
IGNITION CONTROL MODULE 12
SPARK IGNITER AND FLAME SENSE 12
BLOWER AND MOTOR ENDING AT SERIAL NUMBER 481913935 13
BLOWER AND MOTOR 14
OVEN DOORS (SIMULTANEOUS DOORS) ENDING AT SERIAL NUMBER 481907145 16
ASSEMBLY REMOVAL 16
DISASSEMBLY 17
OVEN DOORS (SIMULTANEOUS DOORS) 17
OVEN DOORS AND BEARINGS (INDEPENDENT DOORS) ENDING AT SERIAL NUMBER 481907145 18
DOOR CATCH BALL ASSEMBLY (INDEPENDENT DOORS) 19
OVEN DOORS (INDEPENDENT DOORS) STARTING AT SERIAL NUMBER 481907146 19
ROLLER LATCH ASSEMBLY (INDEPENDENT DOORS) 20
DOOR WINDOW 20
DOOR SWITCH 21
MECHANICAL KX THERMOSTAT (VC4GS/6GS) 21
HIGH LIMIT THERMOSTAT 22
INTERIOR LIGHTS (REAR MOUNTED, ROUND) 22
INTERIOR LIGHTS (SIDE MOUNTED, SQUARE) 23
COOLING FAN 25

SERVICE PROCEDURES AND ADJUSTMENTS 26
SOLID STATE TEMPERATURE CONTROL CALIBRATION 26
MECHANICAL THERMOSTAT CALIBRATION (VC4GS/6GS) 27
SOLID STATE TEMPERATURE CONTROL TEST 28
TEMPERATURE PROBE TEST 29
GAS PRESSURE ADJUSTMENT (UNITS UP TO FEBRUARY 2015) 29
GAS VALVE PRESSURE CHECK 31
VERIFICATION OF SPARK AT IGNITOR 32
DOOR SWITCH ADJUSTMENT 32
BLOWER ADJUSTMENT 33

DOOR ADJUSTMENT 33
DOOR STRIKE ADJUSTMENT (INDEPENDENT DOORS) 34
DOOR CATCH BALL ADJUSTMENT (INDEPENDENT DOORS) 35
DOOR CHAIN ADJUSTMENT (SIMULTANEOUS DOORS) 36
INTRODUCTION 36
PROCEDURE 36
COMPUTER CONTROL (VC4GC/VC6GC) 37
OPERATION 37
SETUP MODE 37
PROBE TEST 38
SOLID STATE RELAY TEST 38
COMPUTER CONTROL CALIBRATION FOR WATLOW CONTROLLER (VC4GC/VC6GC) 38
FLAME SENSE CURRENT TEST 39
SERVICE PROGRAMMING AND TESTING FOR 3700 COMPUTER CONTROL 42
CONVECTION MOTOR CENTRIFUGAL SWITCH (TEST) 45

ELECTRICAL OPERATION 46
COMPONENT LAYOUT AND FUNCTION 46
COMPONENT LAYOUT AND FUNCTION - STARTING SN 482080151 48
COMPONENT LOCATION 50
SEQUENCE OF OPERATION 51
WKGD WITH ROAST & HOLD OPTION (SOLID STATE TEMPERATURE CONTROL) 51

SCHEMATICS 54
VC4GS, VC6GS MECHANICAL (KX) CONTROLS 54
VC4GS, VC6GS MECHANICAL (KX) CONTROLS, ROAST & HOLD OPTION 55
VC4GD, VC6GD SOLID STATE TEMPERATURE CONTROL 56
VC4GD, VC6GD SOLID STATE TEMPERATURE CONTROL, ROAST & HOLD OPTION 62
VC4GC, VC6GC COMPUTER CONTROL (ROAST & HOLD STANDARD) 63
VC4GD & VC6GD, VC WITH STANDING PILOT 120 & 200 VOLT 65

WIRING DIAGRAMS 67
VC4GS, VC6GS MECHANICAL (KX) CONTROLS 67
VC4GS, VC6GS MECHANICAL (KX) CONTROLS, ROAST & HOLD OPTION 69
VC4GD, VC6GD SOLID STATE TEMPERATURE CONTROL 71
VC4GD, VC6GD SOLID STATE TEMPERATURE CONTROL, ROAST & HOLD OPTION 75
VC4GC, VC6GC COMPUTER CONTROL (ROAST & HOLD STANDARD) 77
VC4GD & VC6GD, VC WITH STANDING PILOT 120 & 200 VOLT 79

TROUBLESHOOTING 82
ALL MODELS 82
IGNITION MODULE DIAGNOSTICS 83
COMPUTER CONTROL MODELS ONLY 84
ERROR CODES 85
MECHANICAL CONTROLS TROUBLESHOOTING 86

© VULCAN 2025

SERVICE UPDATES

SERVICE UPDATES - VC4G / VC6G

August 2025
- Added MECHANICAL CONTROLS TROUBLESHOOTING.
- Added CONVECTION MOTOR CENTRIFUGAL SWITCH (TEST).

March 2025
- Added COMPONENT LAYOUT AND FUNCTION - STARTING SN 482080151.
- Updated VC4GD, VC6GD Solid State Temperature Control in SCHEMATICS.
- Updated VC4GD, VC6GD Solid State Temperature Control in WIRING DIAGRAMS.
- Updated VC4GD & VC6GD, VC With Standing Pilot 120 & 200 VOLT.

September 2024
- Updated SPECIFICATIONS.

June 2021
- Added Fig. 106.

March 2020
- Added VC4GD & VC6GD, VC With Standing Pilot 120 & 200 VOLT.

June 2019
- Added SERVICE PROGRAMMING AND TESTING FOR 3700 COMPUTER CONTROL.

October 2018

Updated and Added Data Modules
- BLOWER AND MOTOR
- OVEN DOORS (SIMULTANEOUS DOORS)
- OVEN DOORS (INDEPENDENT DOORS) Starting at Serial Number 481907146
- INTERIOR LIGHTS (Side Mounted, Square)
- INTERIOR LIGHTS (Rear Mounted, Round)
- DOOR ADJUSTMENT
- COMPONENT LOCATION
- FLAME SENSE CURRENT TEST
- VC4GS, VC6GS Mechanical (KX) Controls, Roast & Hold Option
- VC4GD, VC6GD Solid State Temperature Control
- VC4GC, VC6GC Computer Control (Roast & Hold Standard)
- IGNITION MODULE DIAGNOSTICS

TIS DOCUMENT LIST - VC4G AND VC6G

SERVICE TAB	
Document Title	**Document Type**
VC4G and VC6G Service Manual	Service Manual
Watlow Controller Replaced By NCC Controller	Technical Service Bulletin (TSB)

SERVICE TAB (Multimedia)	
Document Title	**Document Type**
DID You Know - VC4GD	Misc.
3700 Oven Quick Start Guide	Operator
Repair Flood-Damaged Food Equipment	Misc
Convection Oven Computer Control Guide	Operator
VC4GD, VC4GC, VC6GD, VC6GC, HGC5, HGC5X, HGC5D, HGC5DX, & WKGD Installation and Operation	I &O Manual
Fundamentals of Gas	Service Instructions
TSB 1037A Hobart to Vulcan "Common" Model Cross Reference List	Technical Service Bulletin (TSB)

SERVICE TAB (Multimedia)	
	Technical Service Bulletin (TSB)
Rating Plate Locations on Current Vulcan-Hart/Wolf Range Equipment	Service Bulletin

PARTS TAB	
Document Title	**Document Type**
Part Catalog for VC4G and VC6G	Parts Catalog

DIAGRAMS TAB	
Document Title	**Document Type**
HGC5, DGC5, VC4G, WKGD Series	Wiring Diagram

GENERAL

INTRODUCTION

Procedures in this manual will apply to all models unless specified. Pictures and illustrations can be of any model unless the picture or illustration needs to be model specific.

FEATURES				
MODEL	**CAVITY DEPTH**	**TEMPERATURE CONTROL**	**DOORS (50/50)**	**COOK TIMER**
WCGD	26.5"	Solid State	Simultaneus	1-Hour Dial

INSTALLATION, OPERATION AND CLEANING

Refer to the Instruction Manual for detailed installation instructions on single or stacked ovens.

OPERATION

Refer to the Instructions Manual for specific operating instructions.

CLEANING

Refer to the Instructions Manual for specific cleaning instructions.

REFERENCE INFORMATION

Refer to the Parts Catalog for parts information.

LUBRICATION

- Cavity blower motor has sealed bearings and requires no additional lubrication.
- Huskey™ TF-1000 grease or equivalent high temperature Teflon grease.

SPECIFICATIONS

Electrical

Voltage - 120/60/1

Amps - 8.0 Amps

Input BTU Rating

Natural Gas - 50,000 BTU input at 5 in. W.C.

Propane Gas - 50,000 BTU input at 10 in. W.C.

Gas Line Pressures

Natural - Recommend (in W.C.) 8.0, Min 6.0

Propane - Recommend (in. W.C.) 11.0, Min 11

Maximum 14.0 in. W.C. (Nat. or Prop.)

TOOLS

Standard

- Standard set of hand tools
- VOM with ability to measure micro amp current

  VOM with minimum of NFPA-70E CAT III 600V, UL/CSA/TUV listed. Sensitivity of at least 20,000 ohms per volt. Meter leads must also be rated at CAT III 600V.
- Gear Puller to remove blower

Special

- Temperature tester (thermocouple type)
- Manometer

REMOVAL AND REPLACEMENT OF PARTS

COVERS AND PANELS



⚠ WARNING

Disconnect the electrical power to the machine and follow lockout / tagout procedures.

⚠ WARNING

SHUT OFF THE GAS BEFORE SERVICING THE UNIT.

Top Front Cover

1. The top front cover is secured with four (4) screws, two on each side of cover. Remove these screws then remove the cover from the oven.

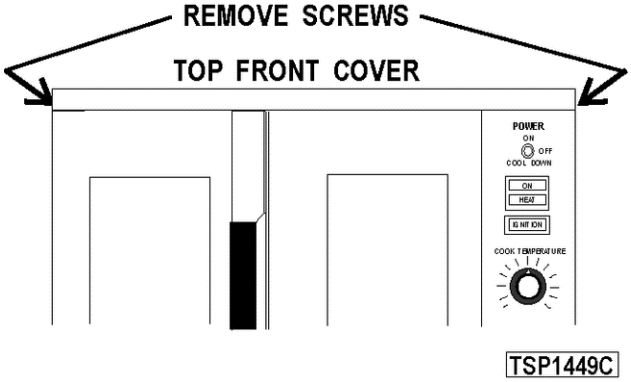

Fig. 1

2. Reverse the procedure to install.

Bottom Front Cover

1. The bottom front cover is secured with four (4) screws, two on each side of cover. Remove these screws then remove the cover from the oven.

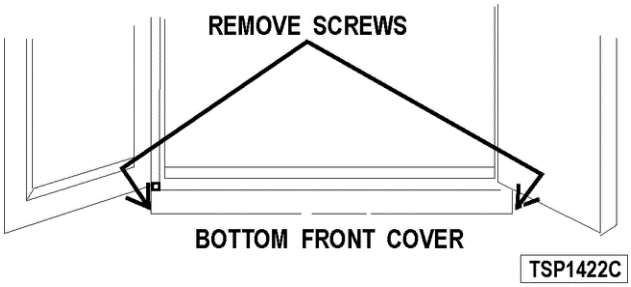

Fig. 2

2. Reverse the procedure to install.

Control Panel

1. Remove three (3) screws on the right side which secure the control panel then pull the panel away from the oven.

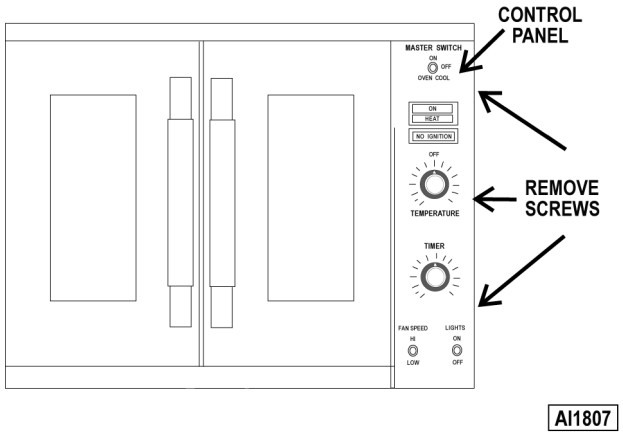

Fig. 3

2. Disconnect the temperature probe leads from the solid state temperature control.
3. Unplug the wire harness connector to the control panel components.
4. Reverse the procedure to install.

Right Side Panel

1. Remove the screws which secure the right side of the top front cover, bottom front cover and control panel.
2. Remove the remaining six screws securing the right side panel.

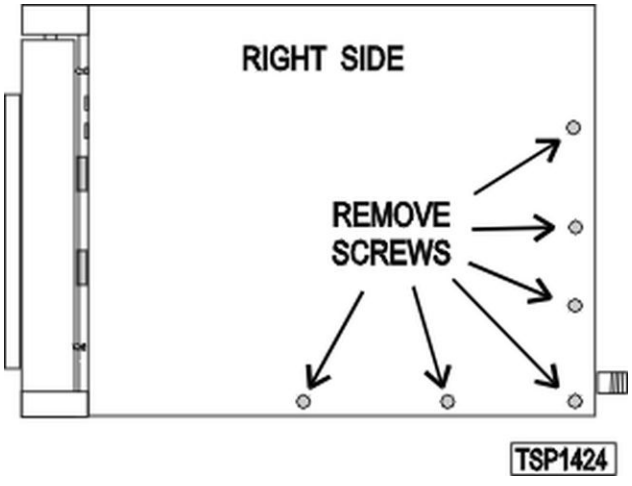

Fig. 4

3. Pull the right side panel out at the bottom then down to remove.

4. Reverse the procedure to install.

CONTROL PANEL COMPONENTS



⚠ WARNING

Disconnect the electrical power to the machine and follow lockout / tagout procedures.

Removable Components Procedure

1. Remove the Control Panel.
2. Remove the component being replaced.
3. Reverse the procedure to install the replacement component, then check oven for proper operation.

PANEL WITH STANDARD CONTROLS SHOWN

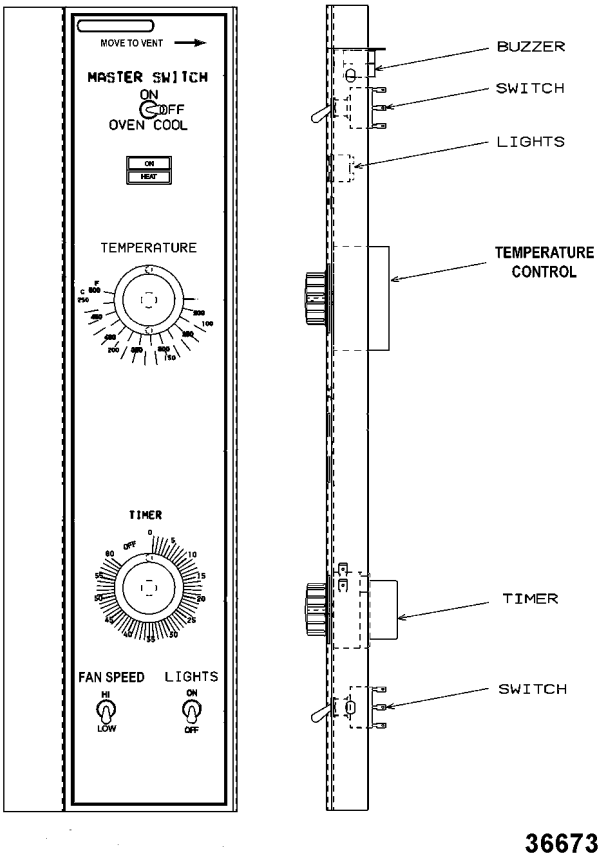

36673

Fig. 5

COMPONENT PANEL COMPONENTS



⚠ WARNING

Disconnect the electrical power to the machine and follow lockout / tagout procedures.

Removable Components Procedure

1. Remove the Right Side Panel.

NOTE: If right side panel is not accessible, this component can be serviced by removing the Control Panel.

2. Disconnect the wire leads to the component being replaced.
3. Remove the component.
4. Reverse the procedure to install the replacement component and check oven for proper operation.

COMPONENT PANEL - COMPUTER CONTROL

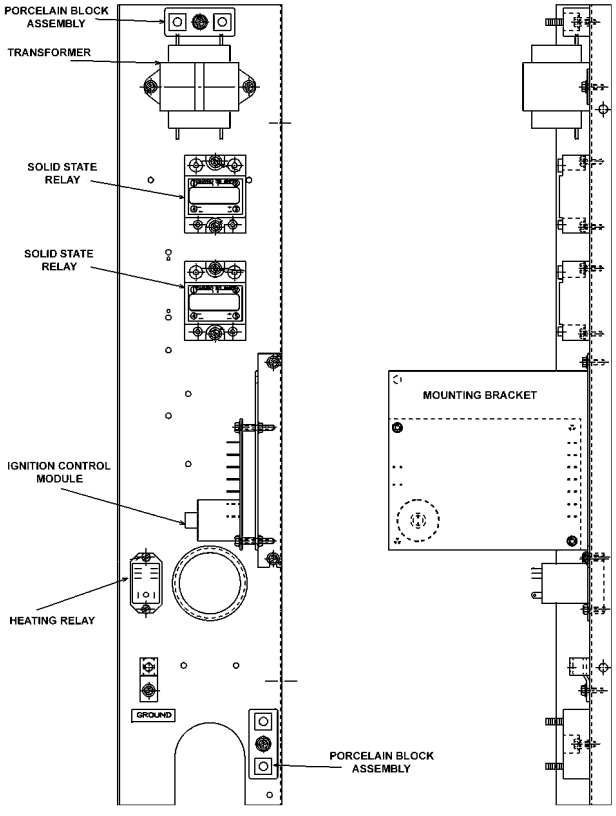

VC4GC/6GC

10435

Fig. 6

TEMPERATURE PROBE



⚠ WARNING

Disconnect the electrical power to the machine and follow lockout / tagout procedures.

1. Remove the Right Side Panel.

NOTE: If right side panel is not accessible, this component can be serviced by removing the Control Panel.

2. Disconnect the probe leads from the solid state temperature control.
3. Remove the racks and right rack support.
4. Remove the probe guard.

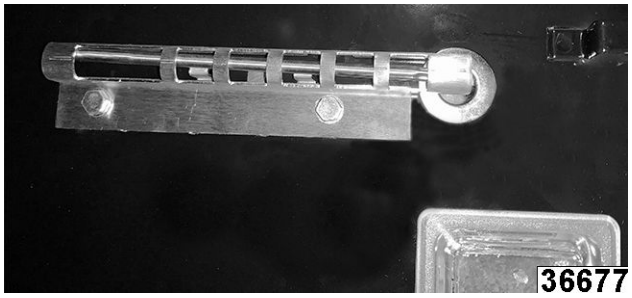

Fig. 7

5. Remove probe by pushing it through the oven wall and into the control panel area.

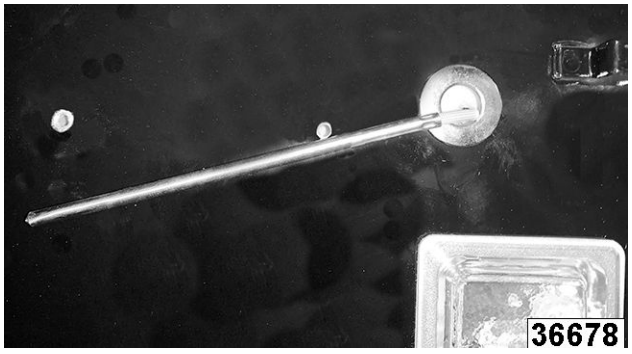

Fig. 8

NOTE: The hole in the oven cavity wall does not line up straight with the oven cavity outer shell, therefore the probe must be removed at an angle.

6. Reverse the procedure to install the replacement probe.

NOTICE

The end with the wire attached should be protected by the guard. It is possible to damage the probe/wire with force from a tray if probe is not protected properly.

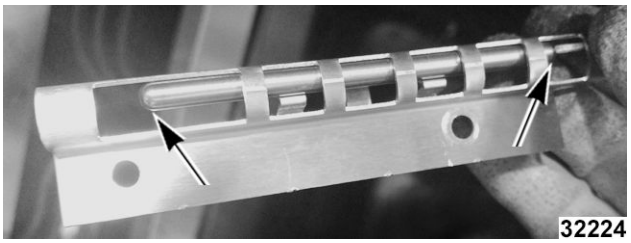

Fig. 9

7. Adjust the temperature control as outlined under SOLID STATE TEMPERATURE CONTROL CALIBRATION.

GAS BURNER



⚠ WARNING

Disconnect the electrical power to the machine and follow lockout / tagout procedures.

⚠ WARNING

SHUT OFF THE GAS BEFORE SERVICING THE UNIT.

1. Remove the BOTTOM FRONT COVER.
2. Disconnect the ignition cable and the flame sense lead wire.

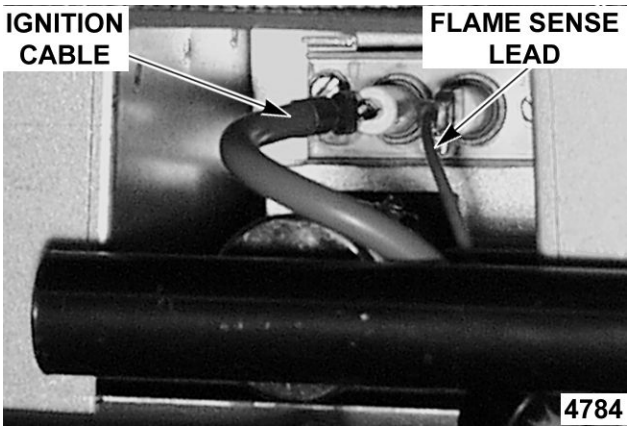

Fig. 10

3. Remove the bolts securing the gas manifold to the oven and place the manifold to the side.

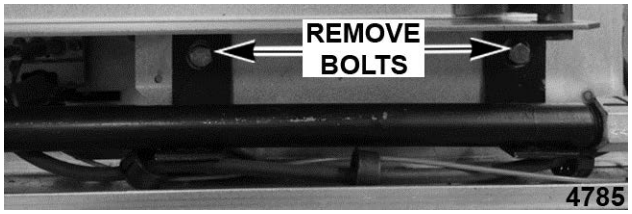

Fig. 11

4. Remove the screws securing the burner cover then lift out.

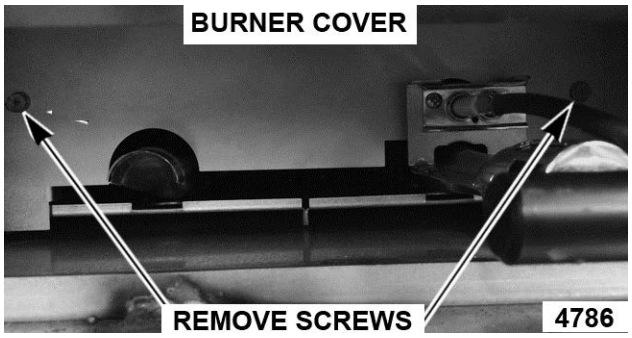

Fig. 12

5. Grasp the burner and lift out.

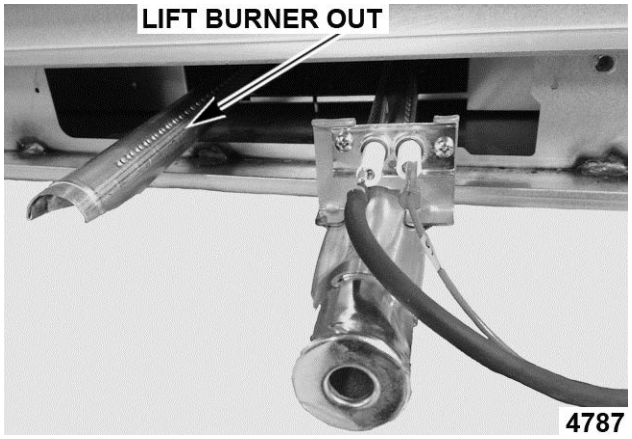

Fig. 13

6. Reverse procedure to install the replacement burner.

NOTE: Ensure that burner positioning bracket (U shaped end) is inserted into slot at the rear of the burner chamber.

NOTE: When installing current production burner covers:

- Lay cover flat over burner with openings aligned behind ignitor.
- Push burner into unit and flip cover 90° up and align mounting holes.

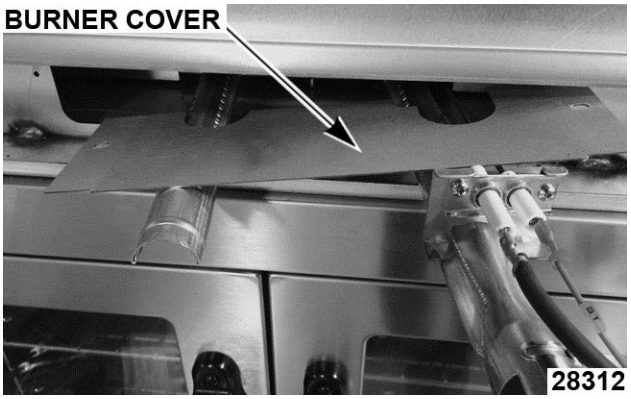

Fig. 14

7. Check for proper operation.

GAS ORIFICE



⚠ WARNING

Disconnect the electrical power to the machine and follow lockout / tagout procedures.

⚠ WARNING

SHUT OFF THE GAS BEFORE SERVICING THE UNIT.

1. Remove the Bottom Front Cover.
2. Remove the bolts securing the gas manifold to the oven and place the manifold to the side.

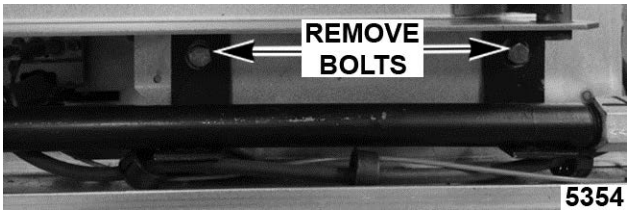

Fig. 15

3. Remove the gas orifice from the spud on the manifold and replace with the correct orifice for the given altitude.

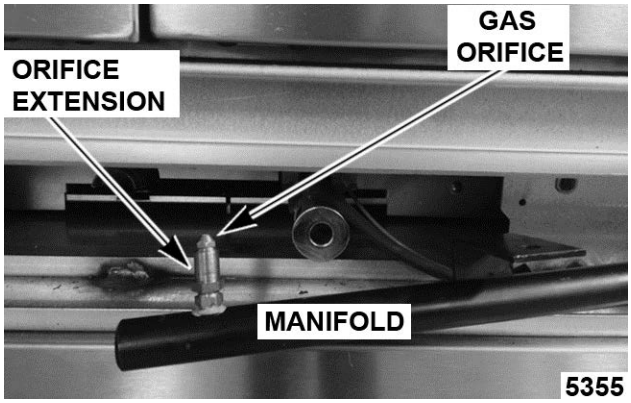

Fig. 16

4. Reverse procedure to install and check for proper operation.

GAS SOLENOID VALVE



⚠ WARNING

Disconnect the electrical power to the machine and follow lockout / tagout procedures.

⚠ WARNING

SHUT OFF THE GAS BEFORE SERVICING THE UNIT.

1. Remove the CONTROL PANEL and the RIGHT SIDE PANEL.

NOTE: if right side panel is not accessible, this component can be serviced by removing the CONTROL PANEL.

2. Disconnect the lead wires.
3. Disconnect the compression fittings to the valve.

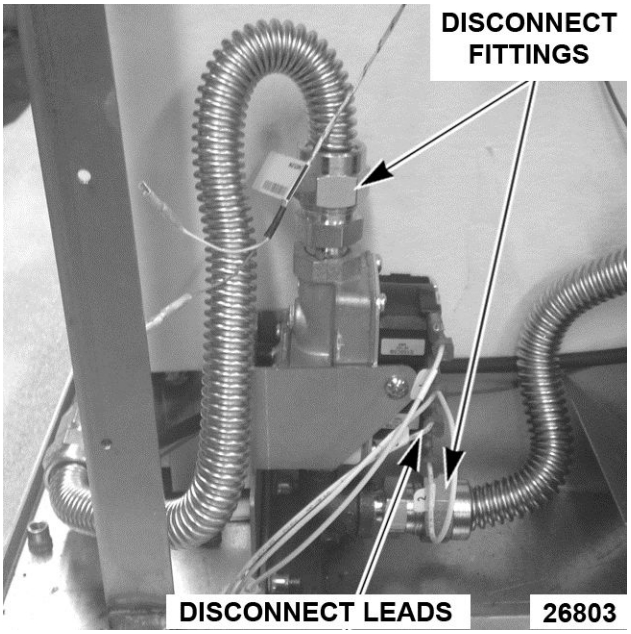

Fig. 17

4. Loosen the bolts securing the valve and bracket assembly then remove the screws securing the valve to the bracket.

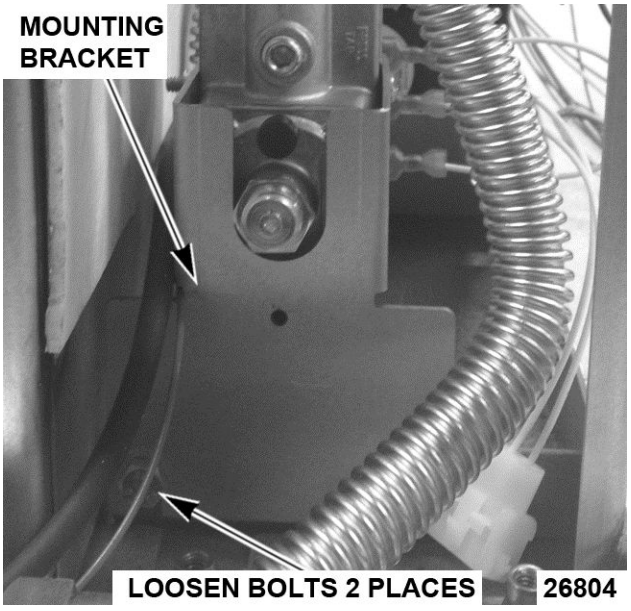

Fig. 18

5. Reverse the procedure to install the replacement gas valve.

NOTE: Clean the pipe threads and apply pipe joint compound to threads. Any pipe joint compound used, must be resistant to the action of propane gases.

⚠ WARNING

All gas joints disturbed during servicing must be checked for leaks. Check with a soap and water solution (bubbles). Do not use an open flame.

6. Verify gas pressure as outlined under GAS VALVE PRESSURE CHECK (for units after February 2015) and check for proper operation.

IGNITION CONTROL MODULE



⚠ WARNING

Disconnect the electrical power to the machine and follow lockout / tagout procedures.

⚠ WARNING

SHUT OFF THE GAS BEFORE SERVICING THE UNIT.

1. Remove the Right Side Panel.

NOTE: If right side panel is not accessible, this component can be serviced by removing the Control Panel.

2. Loosen the screws securing the mounting bracket to the component panel and remove the bracket.

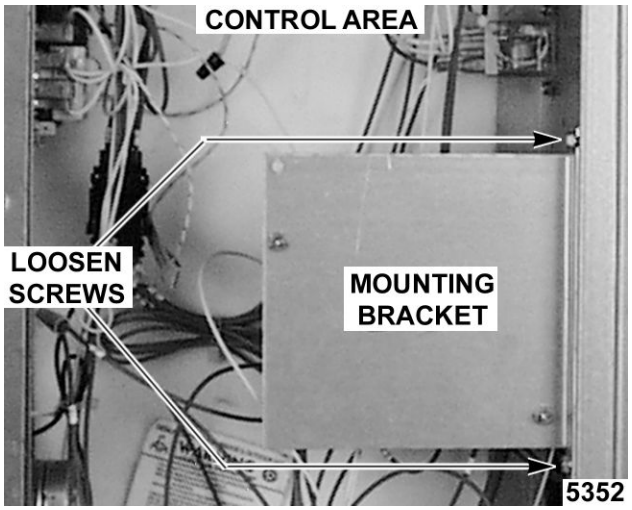

Fig. 19

NOTE: When replacing ignition cable, order service kit which includes ignition cable and insulation cap for the coil.

3. Disconnect the lead wires and igniter cable from the ignition module board.

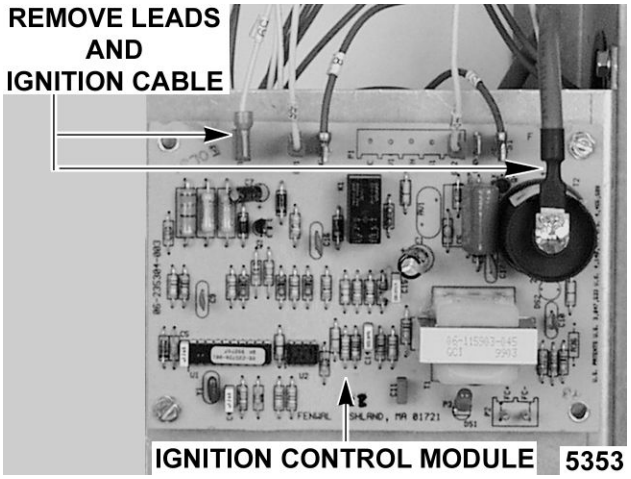

Fig. 20

4. Remove the ignition module board from the mounting bracket.

5. Reverse the procedure to install the replacement ignition module board.

SPARK IGNITER AND FLAME SENSE



⚠ WARNING

Disconnect the electrical power to the machine and follow lockout / tagout procedures.

⚠ WARNING

SHUT OFF THE GAS BEFORE SERVICING THE UNIT.

1. Remove the gas burner as outlined under GAS BURNER.

2. Remove the screws securing the ignitor and flame sense to burner then remove the assembly.

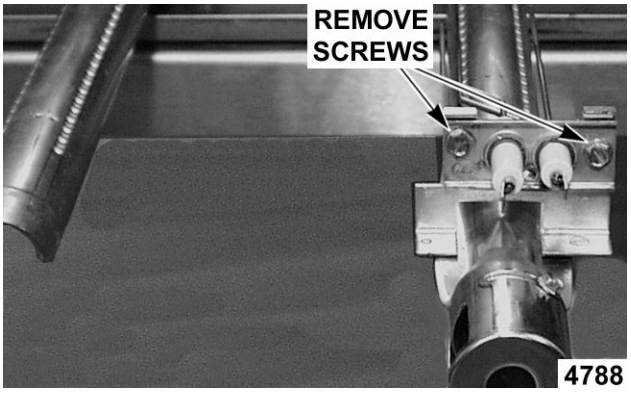

Fig. 21

3. Reverse the procedure to install the assembly and check for proper operation.

NOTE: Check to ensure the spark gap distance is approximately 1/8". If the gap appears to be excessive or poor sparking is occurring then adjust.

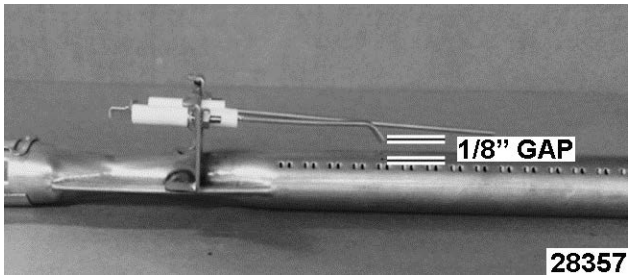

Fig. 22

BLOWER AND MOTOR Ending at Serial Number 481913935



⚠ WARNING

Disconnect the electrical power to the machine and follow lockout / tagout procedures.

⚠ WARNING

SHUT OFF THE GAS BEFORE SERVICING THE UNIT.

1. Take out the racks and rack supports.
2. Remove screws securing the "snorkel" and remove the snorkel.

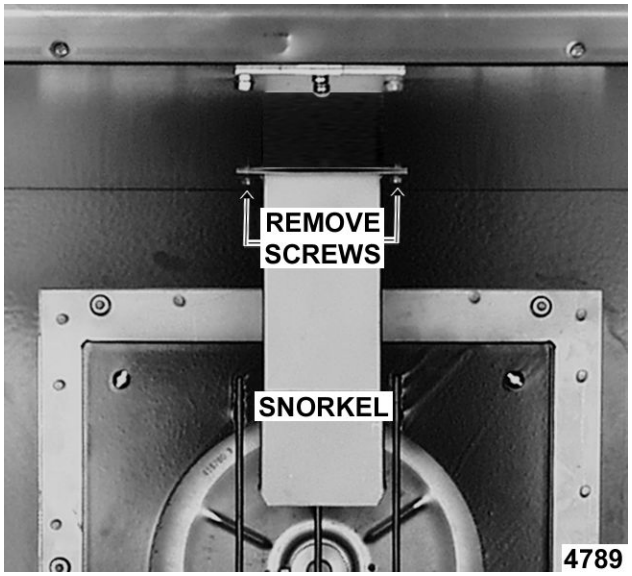

Fig. 23

3. Remove screws securing baffle panel and remove the panel.

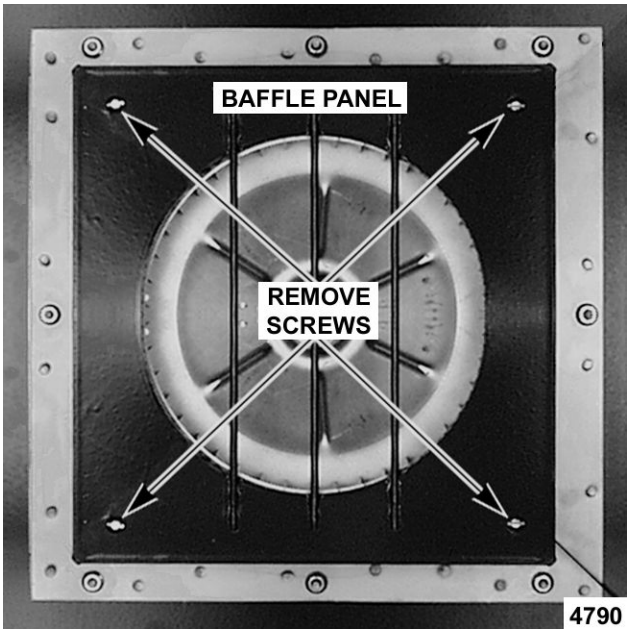

Fig. 24

4. If replacing:
   A. **Blower Only** - Loosen set screws on blower hub and using a bearing puller, remove blower from motor shaft.
      1) Reverse procedure to install and adjust blower position as outlined under BLOWER ADJUSTMENT.
   B. **Motor** - perform step 4A and continue procedure.
5. Remove the screws securing the air baffle to the rear wall at the lower right hand corner.

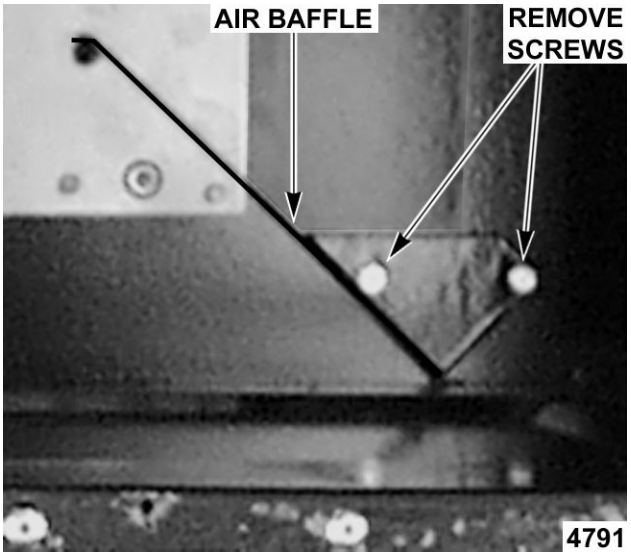

Fig. 25

6. Remove the nuts that secure the motor mounting plate to the rear wall.

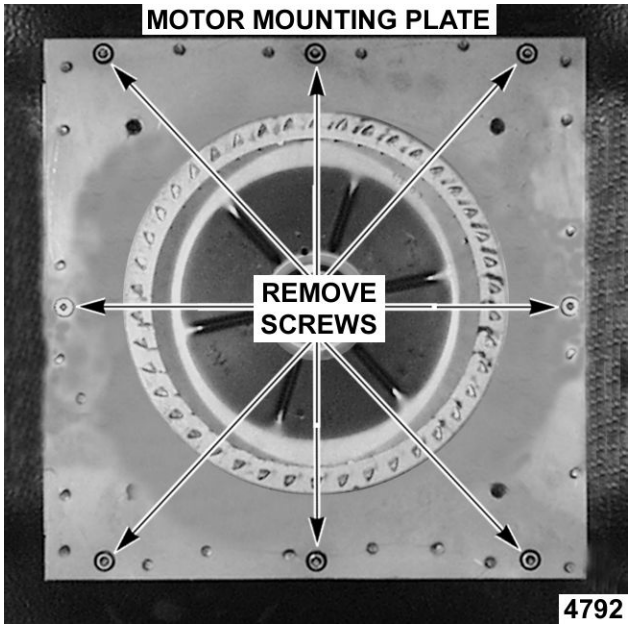

Fig. 26

7. Place a piece of cardboard on the bottom of the oven cavity to protect its surface from any damage during motor assembly removal.
8. Pull the motor assembly into the oven cavity and place it on the cardboard.
9. Remove the junction box cover from the motor, disconnect lead wires and remove the conduit.
10. Remove motor mounting bolts and flat washers then lift the motor from the mounting plate.
11. Position the replacement motor on the motor mounting plate and install mounting bolts and washers. Hand tighten mounting bolts only.
12. Reconnect lead wires at the motor, replace conduit and junction box cover.

NOTE: Check data plate on motor for wiring schematic. The motor must rotate *clockwise* when viewed from the shaft end.

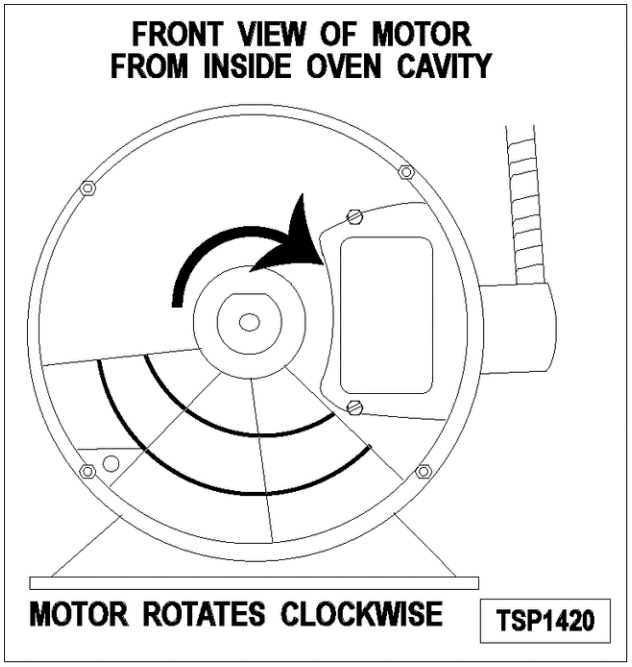

Fig. 27

13. Slide blower onto motor shaft until hub is flush with end of shaft then tighten set screws.
14. Adjust motor position until blower is parallel to motor mounting plate as outlined under BLOWER ADJUSTMENT.
15. Position motor mounting plate on the rear wall and secure with nuts and washers.
16. Replace the baffle panel and “snorkel”.
17. Replace the air baffle on the rear wall at the lower right hand corner.
18. Remove cardboard from the bottom of the oven cavity.
19. Install rack guides and racks.
20. Check oven for proper operation.

BLOWER AND MOTOR



⚠ WARNING

Disconnect the electrical power to the machine and follow lockout / tagout procedures.



⚠ WARNING

Shut off the gas before servicing the unit and follow lockout / tagout procedures.

1. Remove RIGHT SIDE PANEL(S).

2. Disconnect motor harness (1, Fig. 28).

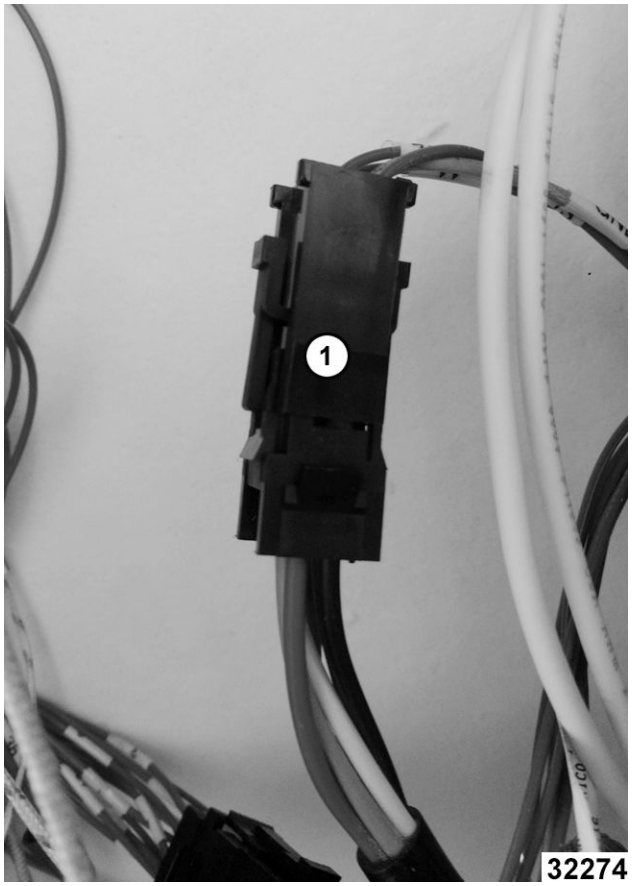

Fig. 28

3. Pinch cord grip together to remove from rear panel.

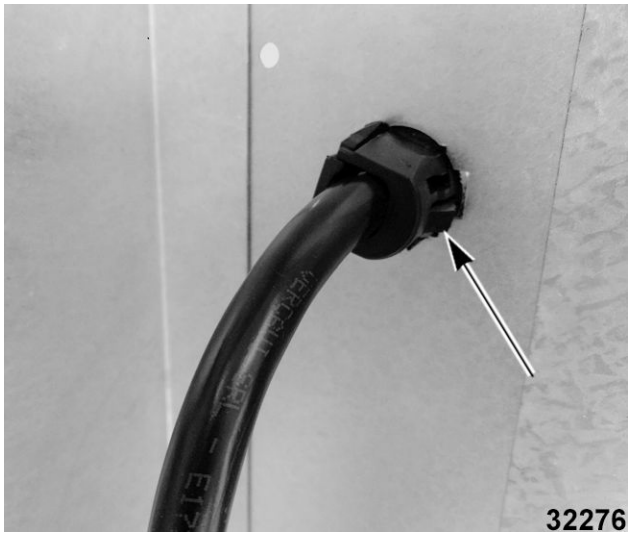

Fig. 29

4. Push motor wiring harness/cord out hole in rear panel.
5. Remove racks.
6. Remove screws securing "snorkel" and remove snorkel.

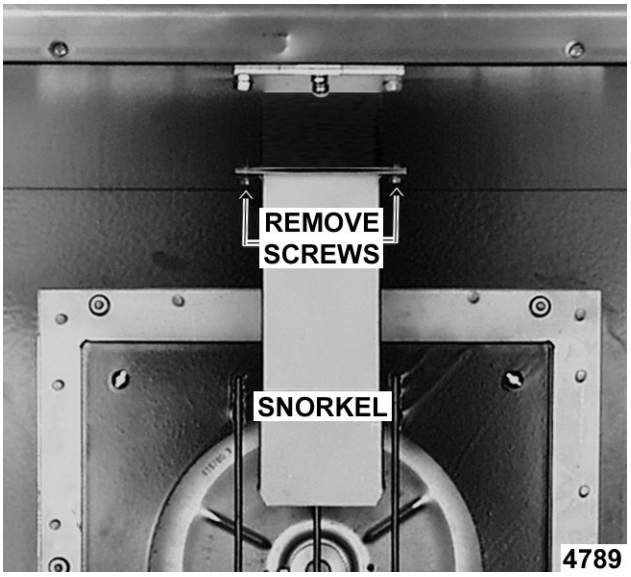

Fig. 30

7. Remove blower baffle screws (2, Fig. 31) if applicable.

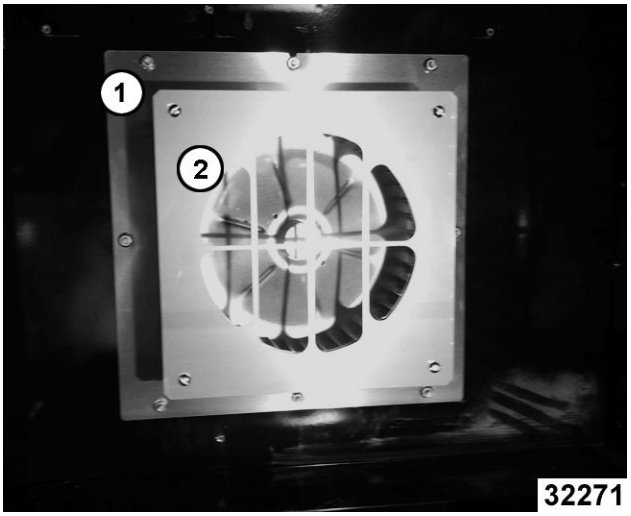

Fig. 31

8. Remove motor mounting plate nuts (1, Fig. 31).
9. Place a piece of cardboard on bottom of oven cavity to protect its surface from any damage during motor assembly removal.
10. Pull motor assembly into oven cavity and place on cardboard.
11. Remove blower wheel from motor shaft.
12. Remove motor mounting bolts and washers and lift motor off mounting plate.

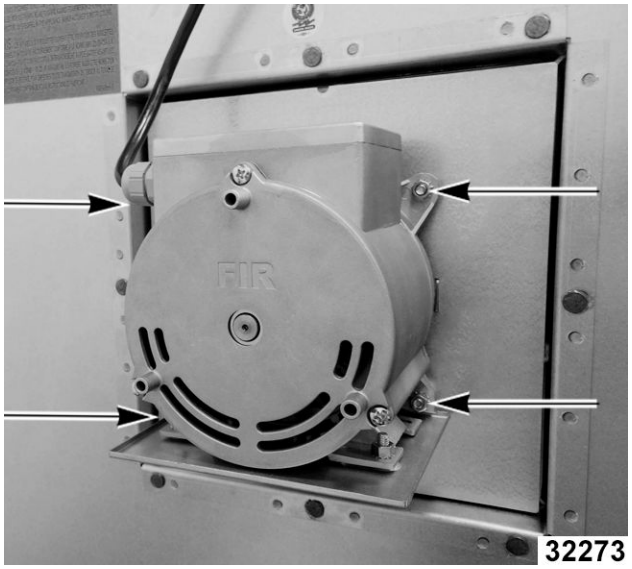

Fig. 32

NOTE: Motor graphics are shown with motor installed.

13. Remove drip pan from motor and install onto replacement motor.



Fig. 33

14. Reverse procedure to install.
15. Verify operation.

OVEN DOORS (SIMULTANEOUS DOORS) Ending at Serial Number 481907145



⚠ WARNING

Disconnect the electrical power to the machine and follow lockout / tagout procedures.

Assembly Removal

1. Remove the Top Front Cover and Bottom Front Cover.
2. Remove the door switch lever.

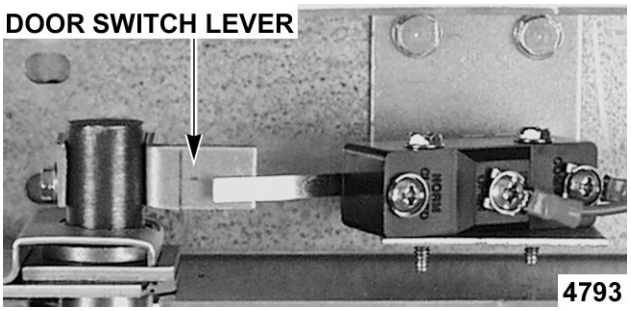

Fig. 34

3. Remove the top bearing retainers and top bearings.

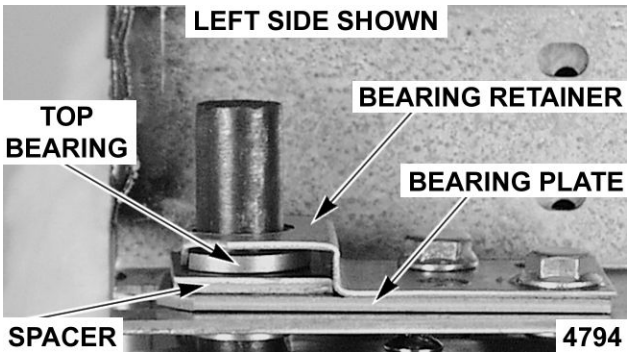

Fig. 35

4. Remove the lower door seal strip to expose the mounting screws of the door assembly.
   A. Remove the two (2) lower sill bolts by the lower door shaft and the four (4) counter-sunk screws from the lower sill.

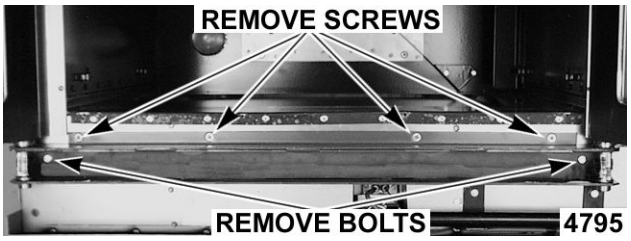

Fig. 36

NOTE: The door assembly is heavy and will drop down once the last screw is removed. If removing door assembly with-out assistance, use caution.

5. Lift up on the door assembly and swing the right side out then move the assembly to the left to clear the slots in the upper door sill.
6. Lay the door assembly on a flat cushioned surface for disassembly.

7. Reverse procedure to install door assembly and check for proper adjustment as outlined under DOOR ADJUSTMENT , DOOR CHAIN ADJUSTMENT (SIMULTANEOUS DOORS) and DOOR SWITCH ADJUSTMENT.

Disassembly

1. Remove the door assembly as outlined in "ASSEMBLY REMOVAL".
2. Remove the door chain by loosening one of the turnbuckles.
3. Loosen the set screw on the sprocket of door being replaced.
4. Drive out the Spirol pin from the sprocket of door being replaced.
5. Remove the door from lower sill bearings and sprocket.

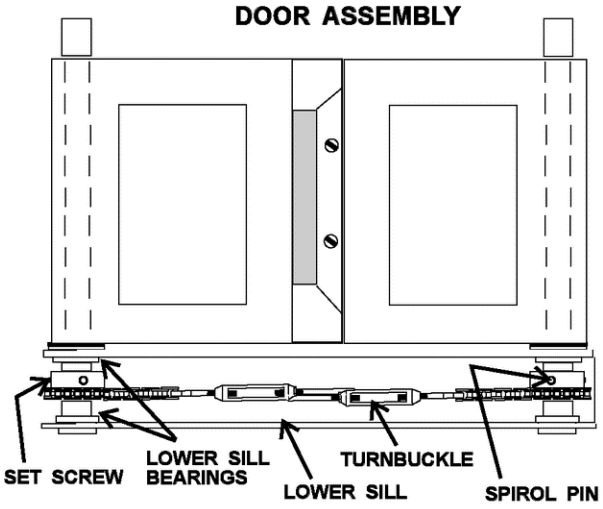

SIMULTANEOUS DOORS SHOWN TSP1425

Fig. 37

   A. Door assembly parts are now accessible for inspection and/or replacement if necessary.

6. Reverse procedure to re-assemble the door assembly parts and check for proper adjustment as outlined under DOOR CHAIN ADJUSTMENT (SIMULTANEOUS DOORS).

OVEN DOORS (SIMULTANEOUS DOORS)

1. Remove TOP FRONT COVER and BOTTOM FRONT COVER.
2. Remove door switch lever.

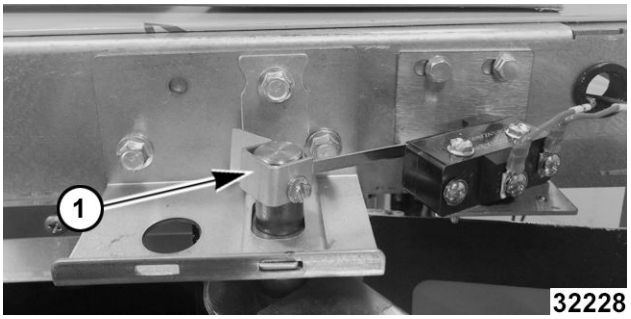

Fig. 38

3. Remove door chain by loosening one of the turnbuckles (Fig. 39).

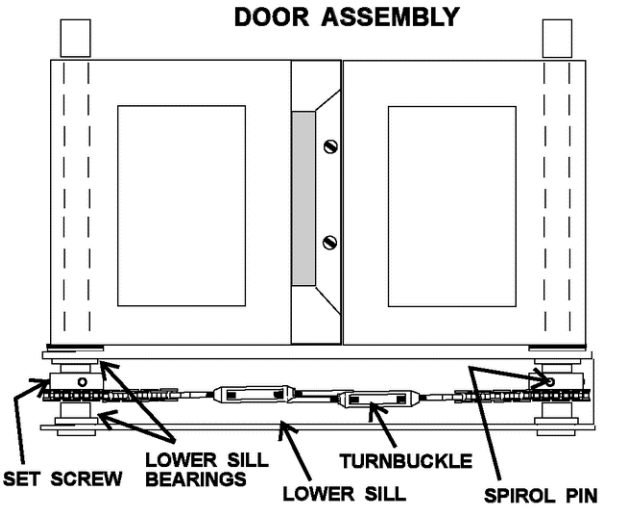

SIMULTANEOUS DOORS SHOWN TSP1425

Fig. 39

4. Loosen the set screw on the sprocket of door being replaced (Fig. 39).
5. Drive out the spiral pin from the sprocket of door being replaced (Fig. 39).
6. While supporting door, remove hex head bolts holding upper bearing retainer (1, Fig. 40) and upper shaft bracket (2, Fig. 40).

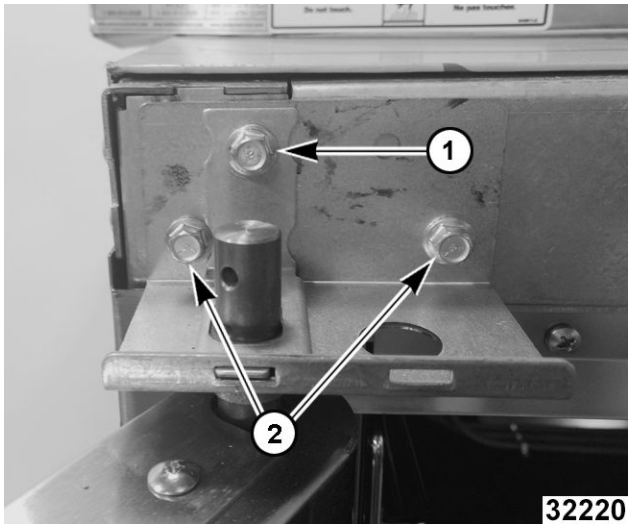

Fig. 40

7. Remove door(s) from lower sill bearings and sprocket Fig. 39.

NOTICE

Lay door on flat protective surface to service.

8. Reverse procedure to install.

NOTICE

Verify spacers are reassembled as found when removed.

9. Perform door adjustments.
   A. DOOR ADJUSTMENT .
   B. DOOR CHAIN ADJUSTMENT (SIMULTANEOUS DOORS) .
   C. DOOR SWITCH ADJUSTMENT .

OVEN DOORS AND BEARINGS (INDEPENDENT DOORS) Ending at Serial Number 481907145



⚠ WARNING

Disconnect the electrical power to the machine and follow lockout / tagout procedures.

1. Remove the Top Front Cover and Bottom Front Cover.
2. Remove the door switch lever.

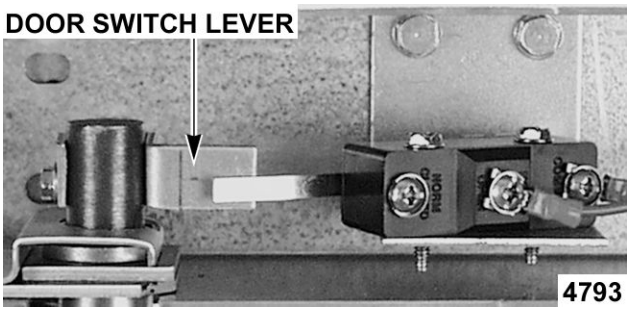

Fig. 41

3. Remove the lower door seal strip to expose the mounting screws of the door assembly.
4. Remove the two (2) lower sill bolts by the lower door shaft and the four (4) counter-sunk screws from the lower sill.

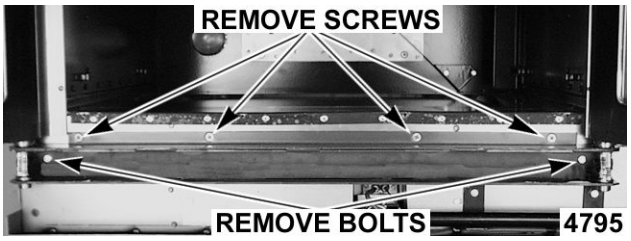

Fig. 42

NOTE: The door assembly is heavy and will drop down once the last screw is removed. If removing door assembly with-out assistance, the ignition cable, flame sense lead and gas manifold should also be removed to avoid damage to these components.

5. Tilt the top of the door slightly forward and lift the door up until the bottom of the door shaft clears the opening in the sill.
6. Lay the door flat to prevent damage.
7. The top and bottom bearings are now accessible for inspection and/or replacement if needed.
   A. If bearings are OK, proceed to step 8.
   B. If replacing the top bearing, remove the top bearing retainer and top bearing.

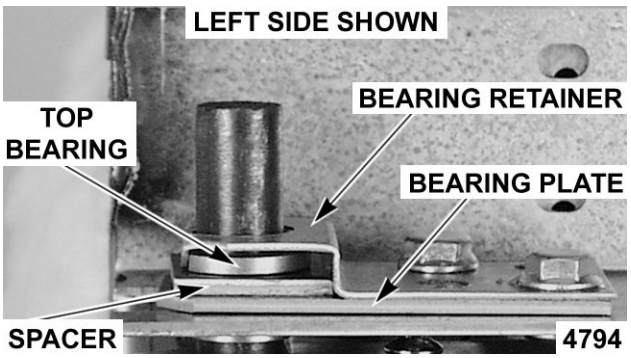

Fig. 43

C. If replacing the bottom bearing, remove it from the door shaft or the lower sill opening.

8. Reverse procedure to install door assembly and check for proper adjustment as outlined under DOOR ADJUSTMENT and DOOR SWITCH ADJUSTMENT.

DOOR CATCH BALL ASSEMBLY (INDEPENDENT DOORS)

NOTE: For units with serial number starting with 48 made before 8/13/07 and serial number starting with 54 made before 8/27/07.



⚠ WARNING

Disconnect the electrical power to the machine and follow lockout / tagout procedures.

1. Remove the FRONT COVER.
2. Remove the screws that secure the door catch assembly.

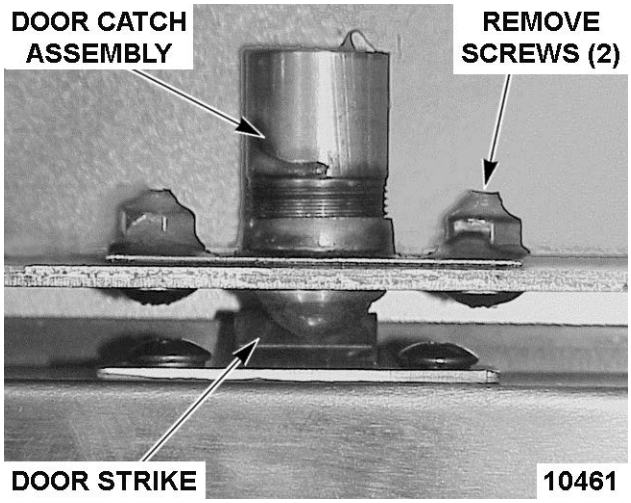

Fig. 44

3. Reverse procedure to install.
4. Adjust the ball catch as outlined under DOOR CATCH BALL ADJUSTMENT (INDEPENDENT DOORS).

OVEN DOORS (INDEPENDENT DOORS) Starting at Serial Number 481907146



⚠ WARNING

Disconnect the electrical power to the machine and follow lockout / tagout procedures.

1. Remove TOP FRONT COVER.
2. If servicing right side door, remove door switch lever (1, Fig. 45).

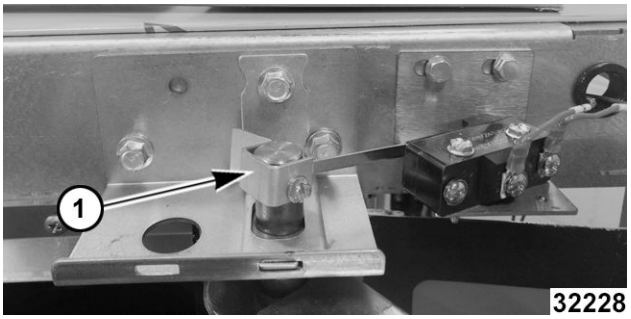

Fig. 45

3. While supporting door, remove hex bolts holding upper bearing retainer (1, Fig. 46) and upper shaft bracket (2, Fig. 46).

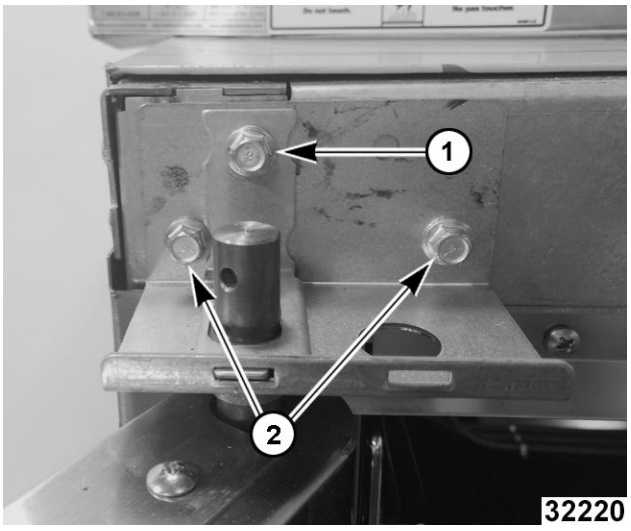

Fig. 46

4. Lift door off lower shaft bracket.

NOTICE

Lay door on flat protective surface to service.

5. Reverse procedure to install.

6. Perform door switch adjustment if servicing right side door.

ROLLER LATCH ASSEMBLY (INDEPENDENT DOORS)

NOTE: For units with serial number starting with 48 made after 8/12/07 and serial number starting with 54 made after 8/26/07.



⚠ WARNING

Disconnect the electrical power to the machine and follow lockout / tagout procedures.

1. Remove the screws that attach roller latch assembly to door.

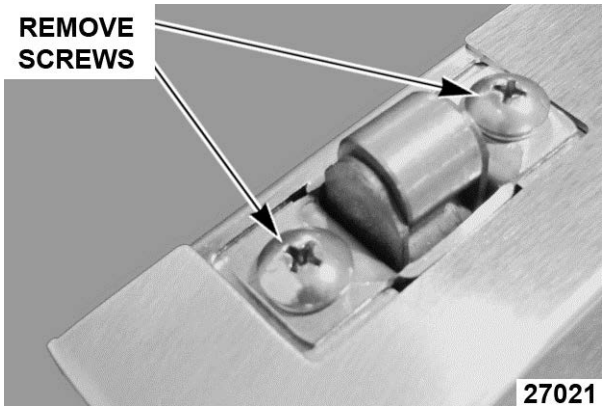

Fig. 47

2. Reverse procedure to install.

DOOR WINDOW



⚠ WARNING

Disconnect the electrical power to the machine and follow lockout / tagout procedures.

1. Remove the screws at the top and bottom of door.

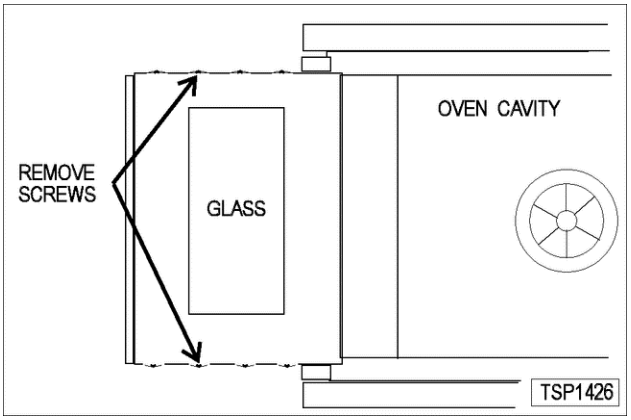

Fig. 48

2. Independent doors:
   A. Remove the door handle then remove the outer door panel.
   B. Lift out the inner door panel and window assembly.

NOTE: Left door only - remove door seal from the inside edge of the door.

3. Simultaneous doors:
   A. If replacing window on the left door, remove the handle from the front of the door then remove door seal from the inside edge of the door.
      1) Lift out the inner door panel and window assembly.
      2) If replacing window on the right door, remove the screws along the inside edge (if applicable) of the door then remove the inner door panel and window assembly.
4. Remove the screws securing the window “tabs” to the door bracket and lift the window assembly out from the door frame.

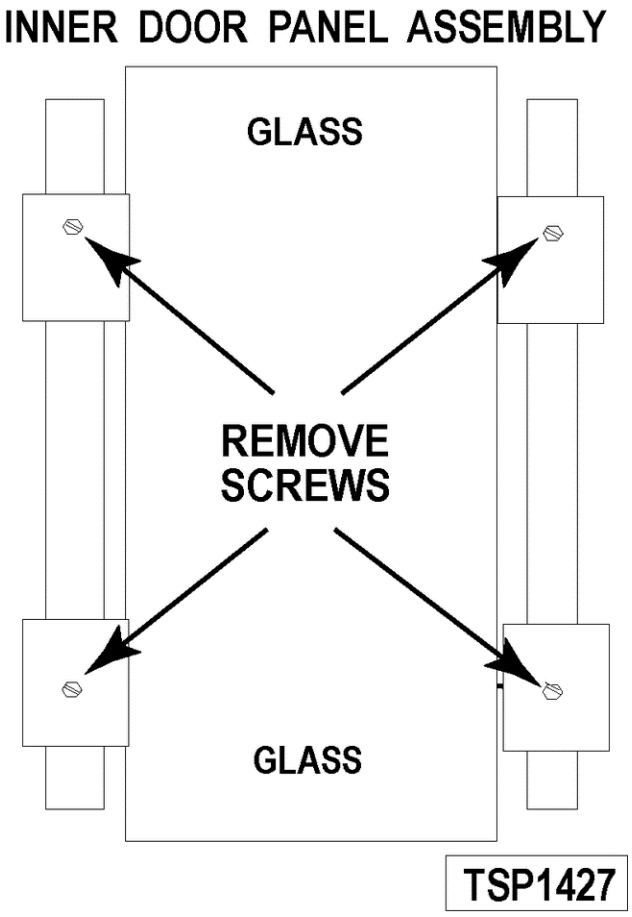

Fig. 49

5. Reverse procedure to install the replacement window.

DOOR SWITCH



⚠ WARNING

Disconnect the electrical power to the machine and follow lockout / tagout procedures.

1. Remove the Top Front Cover.
2. Disconnect the lead wires to the door switch.
3. Remove the switch.

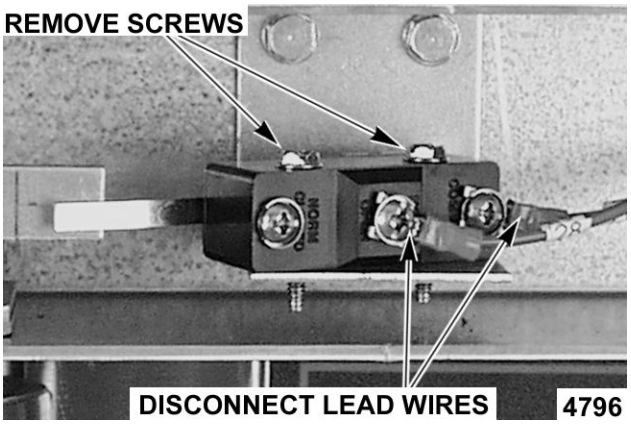

Fig. 50

4. Reverse procedure to install the replacement switch and check for proper adjustment as outlined under DOOR SWITCH ADJUSTMENT.

MECHANICAL KX THERMOSTAT (VC4GS/6GS)



⚠ WARNING

Disconnect the electrical power to the machine and follow lockout / tagout procedures.

1. Remove the racks and right rack support.
2. Remove the thermostat knob and mounting screws from the control panel and then remove the control panel.
3. Remove the probe guard from the oven cavity wall.

NOTE: When installing, the probe should not extend beyond the probe guard.

4. Remove the thermostat bulb from the oven cavity by pushing it through the oven wall and into the control panel area.

NOTE: The hole in the oven cavity wall does not line up straight with the oven cavity outer shell, therefore the probe must be removed at an angle.

5. Reverse the procedure to install.
6. Adjust the thermostat as outlined under MECHANICAL THERMOSTAT CALIBRATION (VC4GS/6GS).

HIGH LIMIT THERMOSTAT



⚠ WARNING

Disconnect the electrical power to the machine and follow lockout / tagout procedures.

1. Take out racks from the oven.
2. Remove the high limit thermostat cover/mounting plate from inside the oven cavity at the top.

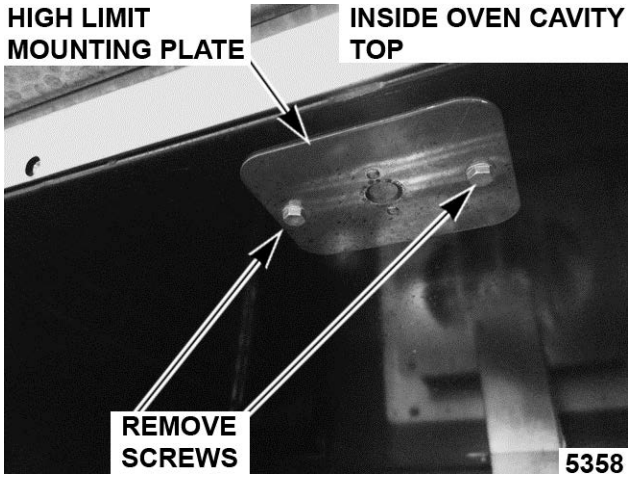

Fig. 51

3. Disconnect lead wires from high limit thermostat then remove high limit thermostat from cover/ mounting plate.

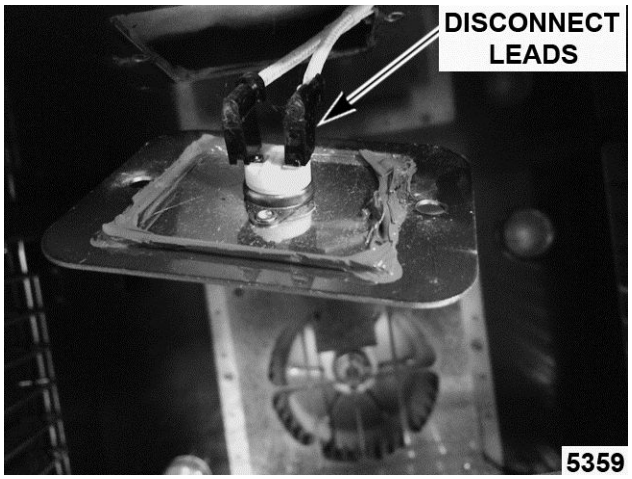

Fig. 52

NOTE: Remove the old RTV from the cover and mating surfaces inside the oven cavity and apply new RTV before installing.

4. Reverse procedure to install.

INTERIOR LIGHTS (Rear Mounted, Round)



⚠ WARNING

Disconnect the electrical power to the machine and follow lockout / tagout procedures.

Lamp

1. Remove racks.
2. Unscrew glass lens for the light being replaced then unscrew bulb.

NOTE: Use a cloth when handling bulb so you do not leave fingerprints on bulb.

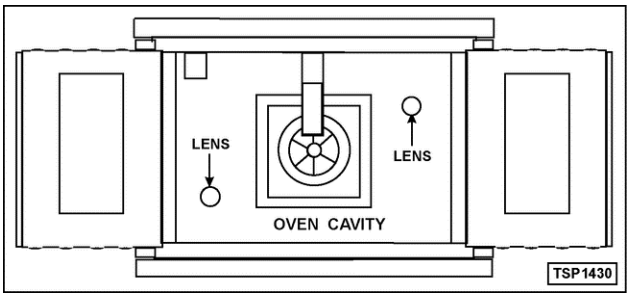

Fig. 53

3. Replace bulb then reverse procedure to install.



⚠ WARNING

Disconnect the electrical power to the machine and follow lockout / tagout procedures.

Lamp Assembly

1. Remove lens and bulb.
2. Remove springs from retaining tabs (2 places) on the socket.

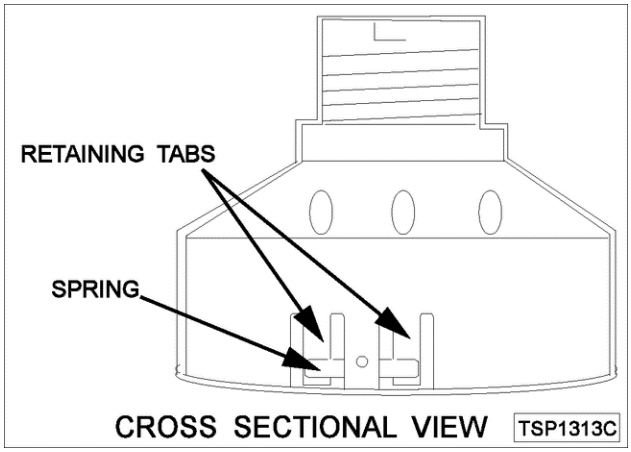

Fig. 54

3. Depress retaining tabs and pull socket out from the oven, far enough to disconnect lead wires.
4. Remove socket from the oven.
5. Attach lead wires to the replacement socket.
6. Insert socket into the hole in oven and push until socket is held in place by retaining tabs.
7. Install light bulb and lens.
8. Check for proper operation.

INTERIOR LIGHTS (Side Mounted, Square)

Bulb Replacement



⚠ WARNING

Disconnect the electrical power to the machine and follow lockout / tagout procedures.

1. Remove racks and right-side hand rack guide.
2. Pull lamp cover off.
3. Grasp lamp using a clean cloth and remove from lamp assembly.

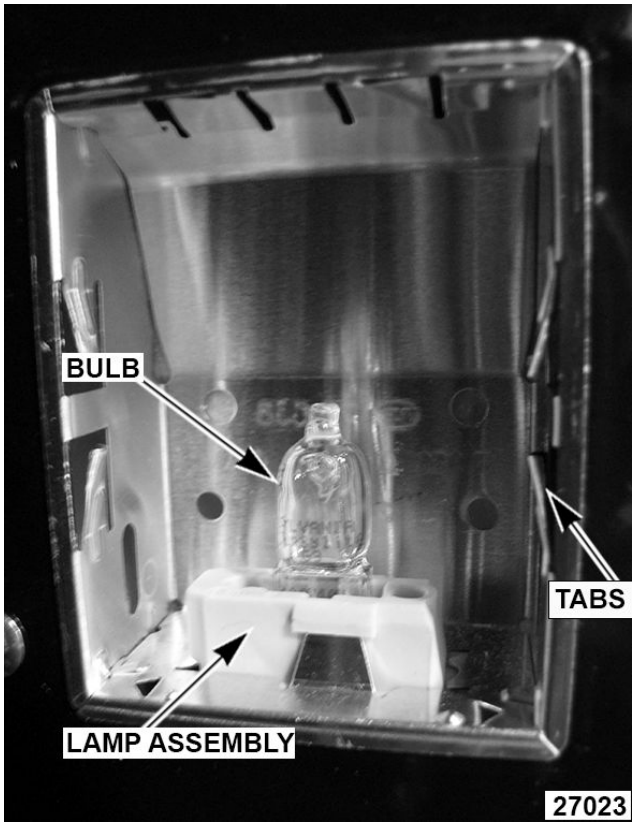

Fig. 55

4. Reverse procedure to install new bulb.

NOTE: Verify gasket (1, Fig. 56) is flat on lamp cover and not damaged.

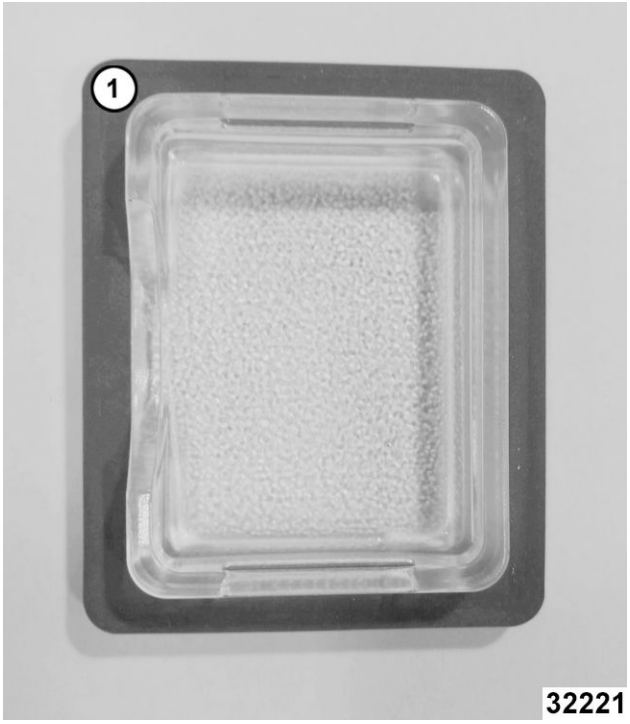

Fig. 56

Lamp Assembly Replacement



⚠ WARNING

Disconnect the electrical power to the machine and follow lockout / tagout procedures.

1. Remove racks.
2. Remove BULB if reusing.
3. Lift right side rack guide off oven cavity.
4. Pull lamp cover off from the top or bottom.
5. Insert narrow blade screwdriver into tab and bend out to release. Repeat with second tab.

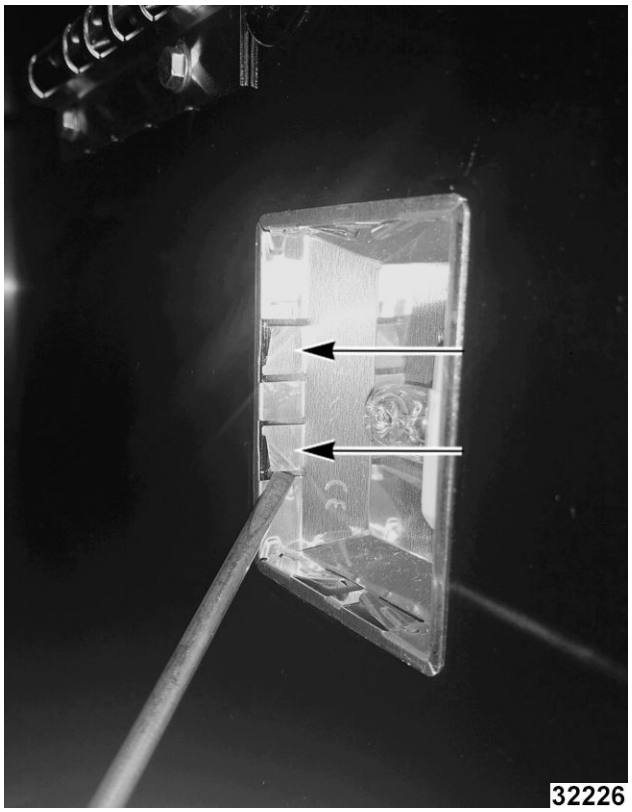

Fig. 57

6. Pull lamp housing out of oven cavity.
7. Disconnect wires.

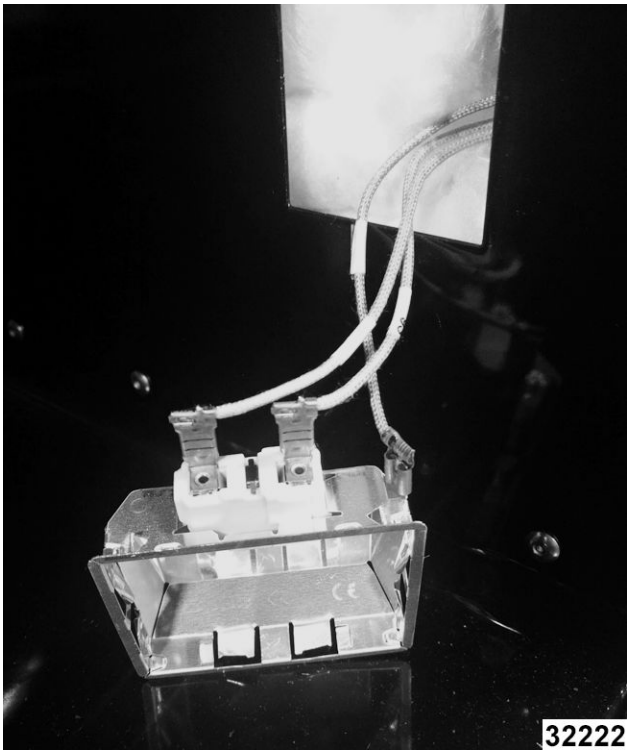

Fig. 58

8. Reverse procedure to install.

NOTE: Verify gasket (1, Fig. 59) is flat on lamp cover and not damaged.

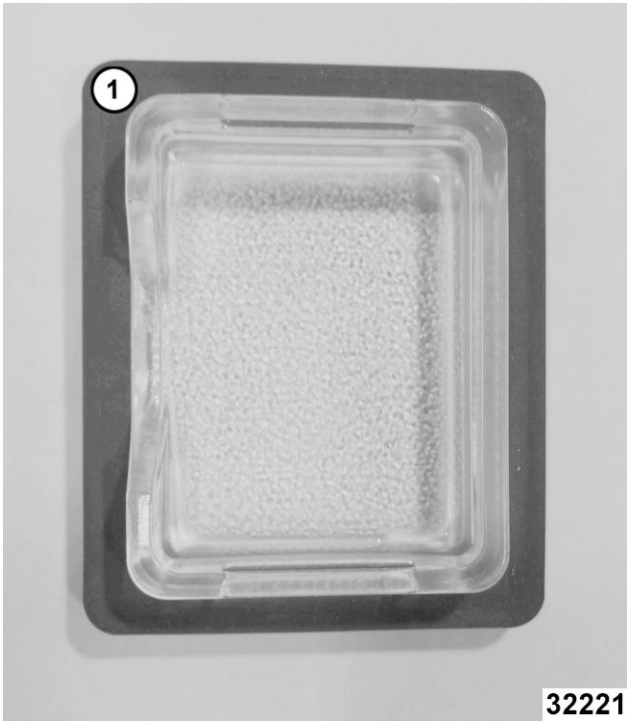

Fig. 59

COOLING FAN



⚠ WARNING

Disconnect the electrical power to the machine and follow lockout / tagout procedures.

1. Remove the Right Side Panel.

NOTE: If right side panel is not accessible, this component can be serviced by removing the Control Panel.

Disconnect the lead wires to the fan motor by removing wire nuts.

2. Remove the screws securing the air deflector to the fan then loosen the tab screw holding the fan to the component panel. Rotate the tab so that the fan will clear and remove the fan.

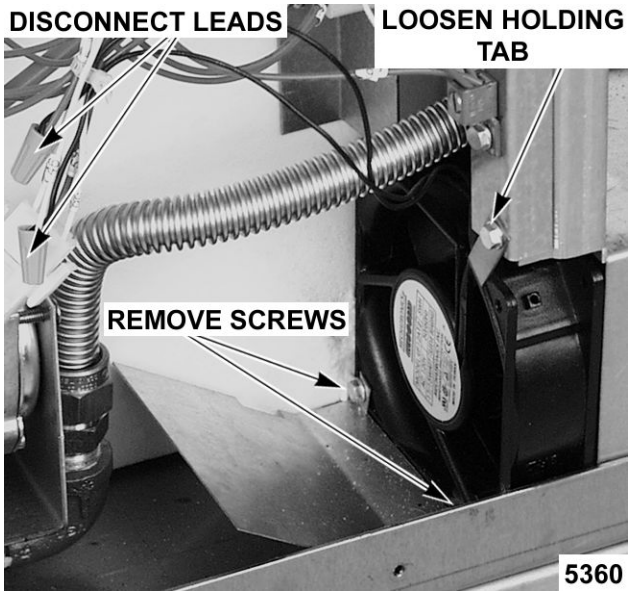

Fig. 60

3. Reverse the procedure to install the replacement fan and check for proper operation.

NOTE: The fan must be installed so air is pulled from the rear of the oven and blown into the control area. The arrow on the fan body indicates “air flow” direction and should be pointing toward the controls.

NOTE: Ensure fan is seated “squarely” against the air tube and the oven bottom.

NOTE: The air deflector should be angled upwards at approximately 30 degrees to properly direct the air flow.

SERVICE PROCEDURES AND ADJUSTMENTS



⚠ WARNING

Certain procedures in this section require electrical test or measurements while power is applied to the machine. Exercise extreme caution at all times and follow Arc Flash procedures. If test points are not easily accessible, disconnect power and follow Lockout/Tagout procedures, attach test equipment and reapply power to test.

SOLID STATE TEMPERATURE CONTROL CALIBRATION

1. Place a thermocouple in geometric center of oven cavity.
2. Set ON-OFF-COOL DOWN switch to ON.
3. Set temperature control dial to 350°F.
4. Allow oven temperature to stabilize (normally 3 cycles).
5. Record temperature at which Heat lamp goes OFF and comes ON for at least two complete heating cycles.
6. Calculate differential by subtracting temperature indicated when lamp goes out from temperature indicated when lamp comes on.

   Differential = Heat lamp OFF - Heat lamp ON

   Example: 360° (lamp off) - 340° (lamp on) = 20°

   A. Calculated differential should be **less** than 20°F.

      1) If differential is **less** than 20°F, temperature control circuit is functioning properly.

         a. Proceed to Step 7.

      2) If the differential is **more** than 20°F:

         a. Check the temperature probe as outlined under TEMPERATURE PROBE TEST.

         b. If probe is functioning properly then temperature control is malfunctioning.

            a) Install a replacement temperature control and check calibration.

7. Calculate average temperature by adding temperature indicated when lamp goes out to temperature indicated when lamp comes on and dividing this answer by 2.

   [Temp. (lamp off) + Temp. (lamp on)] ÷ 2 = Average Temp. Example: (360° + 340°) ÷ 2 = 350°

   A. If average temperature is **less** than 10°F from dial setting, thermostat is properly calibrated.

   B. If average temperature is **more** than 10°F from dial setting, thermostat calibration must be adjusted.

      1) Loosen temperature control knob set screw and remove knob from stem.

      2) Access adjustment potentiometer located at 3 o'clock position.

NOTE: If no access hole exists in overlay, you may carefully create one.

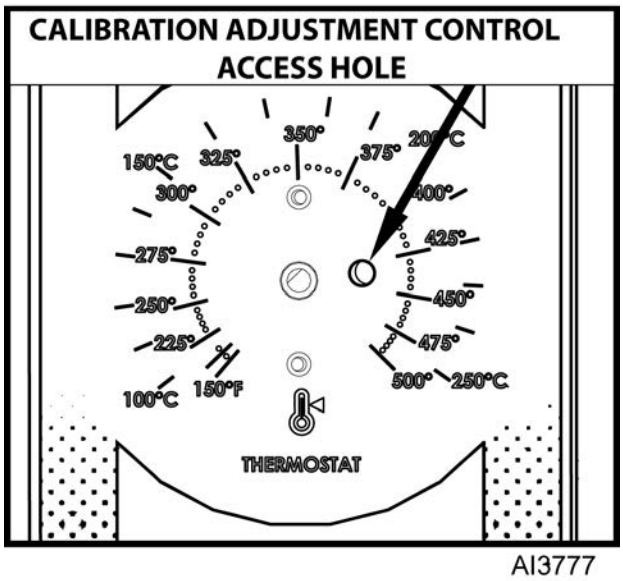

Fig. 61

   a. Turn *clockwise* to increase, *counterclockwise* to decrease temperature

b. Repeat average temperature calculation in Step 7.

NOTE: Allow oven to cycle at least two times between adjustments before performing calculation.

a) If average temperature still differs **more** than 10°F from dial setting, adjust thermostat calibration until average temperature is within tolerance.

C. If above adjustment cannot be obtained, replace temperature control and check calibration.

MECHANICAL THERMOSTAT CALIBRATION (VC4GS/6GS)

1. Place a thermocouple in the geometric center of the oven cavity.
2. Set the ON-OFF-COOL DOWN switch to ON.
3. Set the thermostat dial to 350°F.
4. Allow the oven temperature to stabilize (normally 3 cycles).
5. Record the temperature when the thermostat cycles OFF and ON for at least three complete cycles.
6. Calculate the differential by subtracting the temperature indicated when heat lamp goes out from temperature indicated when heat lamp comes on.

   Differential = Heat lamp OFF - Heat lamp ON

   Example: 360° (lamp off) - 340° (lamp on) 20°

   A. The differential calculated should be **less** than 30°F.

      1) If the differential is **less** than 30°F, the thermostat is functioning properly.

         a. Proceed to Step 7.

      2) If the differential is **more** than 30°F, the thermostat is malfunctioning.

         a. Install a replacement thermostat and check calibration.

7. Calculate the average temperature by adding the temperature indicated when the heat lamp goes out to the temperature indicated when the heat lamp comes on and dividing this answer by 2.

   [Temp. (lamp off) +Temp. (lamp on)] ÷ 2 = Average Temp.

   Example: 360° 340° ÷ 2 350°

   A. If the average temperature is **less** than 15°F from the dial setting, the thermostat is properly calibrated.

   B. If the average temperature is **more** than 15°F of the dial setting, the thermostat calibration **must** be adjusted.

      1) Remove the thermostat knob.

      2) Hold the thermostat shaft and turn the inner set screw *clockwise* to decrease temperature or *counterclockwise* to increase temperature (¼ turn = 35°(F).

8. Replace the knob and repeat Step 7 until the average temperature is within tolerance.

NOTE: Allow the oven to cycle at least two times between adjustments before performing the calculation.

9. If the above adjustment can not be obtained, install a replacement thermostat and check calibration.

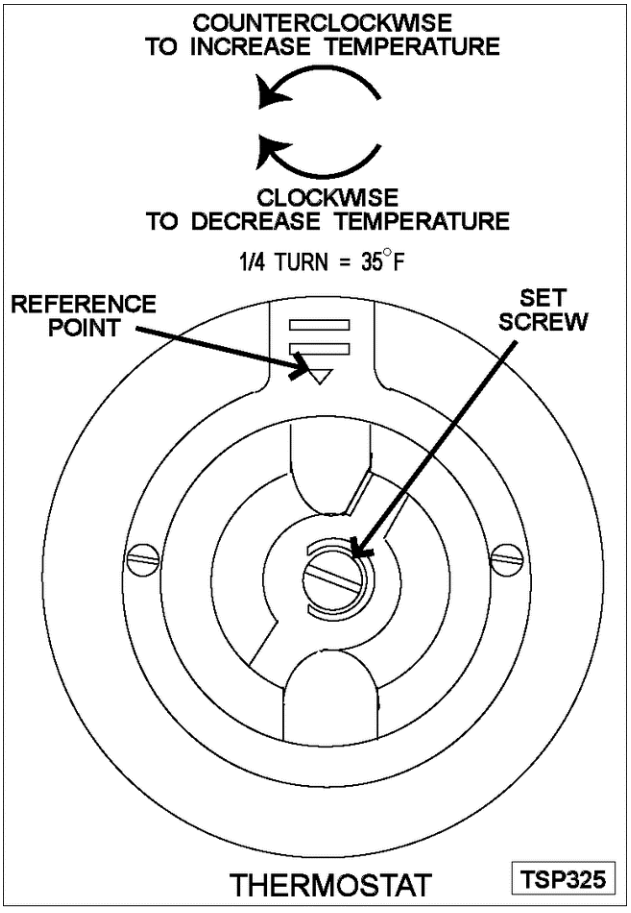

Fig. 62

SOLID STATE TEMPERATURE CONTROL TEST



⚠ WARNING

Certain procedures in this section require electrical test or measurements while power is applied to the machine. Exercise extreme caution at all times and follow Arc Flash procedures. If test points are not easily accessible, disconnect power and follow Lockout/Tagout procedures, attach test equipment and reapply power to test.

1. Remove the RIGHT SIDE PANEL.

NOTE: If right side panel is not accessible, this component can be serviced by removing CONTROL PANEL.

2. Place a thermocouple in the geometric center of the oven cavity.

NOTE: Oven temperature must be below 450°F.

NOTE: If oven is equipped with "Cook and Hold" option, set to Cook (normal cooking) before continuing.

3. Set the temperature control to the maximum setting.
4. Check machine data plate for correct voltage to oven. Refer to diagram below for proper terminal locations and voltages before checking the control. Use the correct terminals for the corresponding voltage.
5. Turn the power switch to ON.

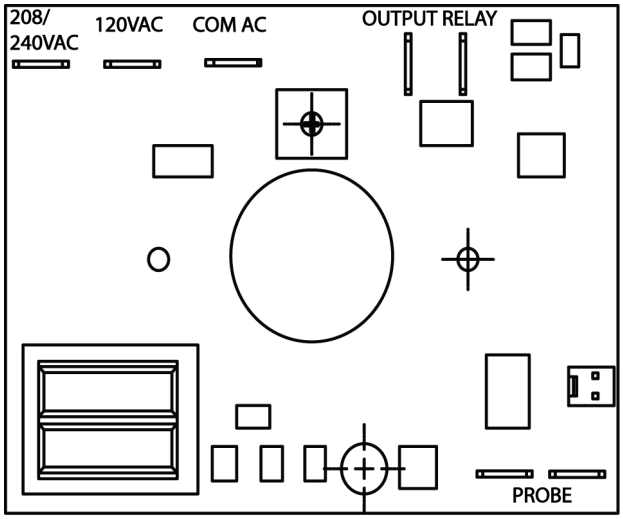

Fig. 63

6. Check for proper voltage across terminals COM AC to 120VAC or COM AC to 208-240VAC for power to the control.
   A. If correct, proceed to step 7.
   B. If incorrect, problem is **not** with the temperature control. See TROUBLESHOOTING.
7. Check relay voltages on the board:
   A. For 120VAC controls - check across OUTPUT RELAY terminal (left side) to 120VAC terminal for input to the internal relay. Check across OUTPUT RELAY terminal (right side) to 120 VAC for output from the internal relay.
   B. For 208-240VAC controls - check across OUTPUT RELAY terminal (left side) to 208-240VAC terminal for input to the internal relay. Check across OUTPUT RELAY terminal (right side) to 208-240VAC for output from the internal relay.
      1) If input voltage to the internal relay is correct, proceed to step 8. If input voltage to the internal relay is not present, problem is not with the temperature control. See TROUBLESHOOTING.
      2) If output voltage from the internal relay is correct proceed to step 8. If output voltage from the internal relay is not correct, check temperature probe as outlined under TEMPERATURE PROBE TEST (VC4GD/6GD).
8. Set the temperature control to the minimum setting.

NOTE: Oven temperature **must** be above 300°F.

9. Check for zero (0) volts AC across terminals OUTPUT RELAY terminal (right side) to 120VAC or OUTPUT RELAY terminal (right side) to 208-240VAC for no output from the internal relay.
   A. If correct, temperature control is functioning properly.
   B. If incorrect, check temperature probe as outlined under TEMPERATURE PROBE TEST (VC4GD/6GD).
      1) If temperature probe is OK:
         a. Turn the power switch OFF.



⚠ WARNING

Disconnect the electrical power to the machine and follow lockout / tagout procedures.

         b. Replace the temperature control and check calibration as outlined under SOLID STATE TEMPERATURE CONTROL CALIBRATION (VC4GD/6GD).

TEMPERATURE PROBE TEST



⚠ WARNING

Disconnect the electrical power to the machine and follow lockout / tagout procedures.

NOTE: The temperature probe used in conjunction with the Solid State Temperature control is an RTD (resistance temperature detector) of the Thermistor type. As temperature increases the resistance value decreases.

1. Remove the Right Side Panel.

NOTE: If right side panel is not accessible, this component can be serviced by removing the Control Panel.

2. Place a shielded thermocouple in the geometric center of the oven cavity and determine the temperature in the oven cavity.
3. Remove the probe lead wires from the solid state temperature control.
4. Test the probe with an ohmmeter.
   A. If the measured resistance values are inside the given tolerance then the probe is functioning properly.
   B. If the measured resistance values are outside the given tolerance then replace the probe and retest.
      1) Check oven for proper operation.
5. Reverse procedure to install.

TEMP (°F)	OHMS*	TEMP (°F)	OHMS*
77	90,000	360	822
240	4,077	380	656
260	3,016	400	529
280	2,266	425	424
300	1,726	450	334
320	1,332	475	266
340	1,041		
(*) Resistance in ohms ± 10%			

GAS PRESSURE ADJUSTMENT (units up to February 2015)



⚠ WARNING

Disconnect the electrical power to the machine and follow lockout / tagout procedures.

1. Turn gas supply off at manual shutoff valve.
2. Remove the Right Side Panel.

NOTE: If right side panel is not accessible, this component can be serviced by removing the Control Panel.

3. Remove the plug from the manifold pressure port.

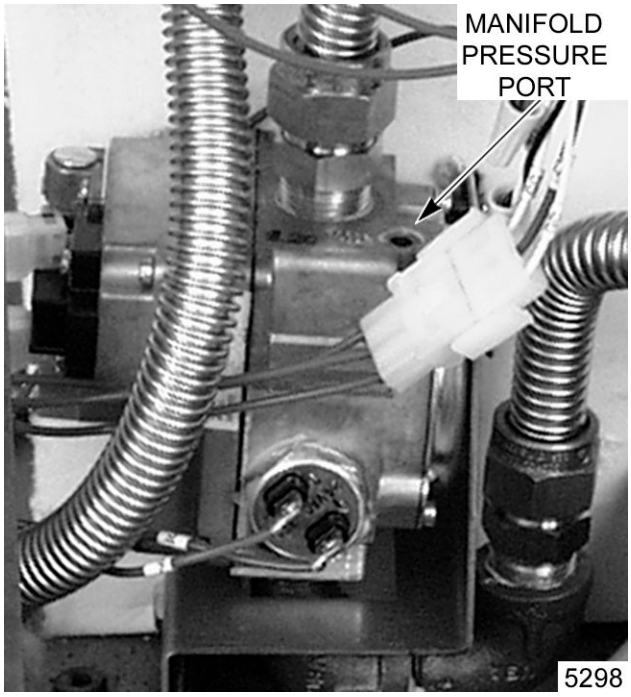

FIRST GENERATION UNIT SHOWN (Before April 2005)

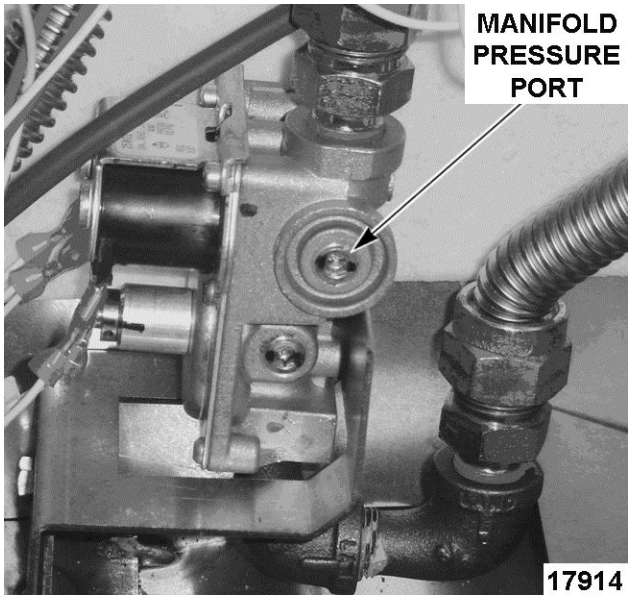

SECOND GENERATION UNIT SHOWN (After April 2005 thru February 2015)

4. Install hose barb adapter and attach manometer tube.

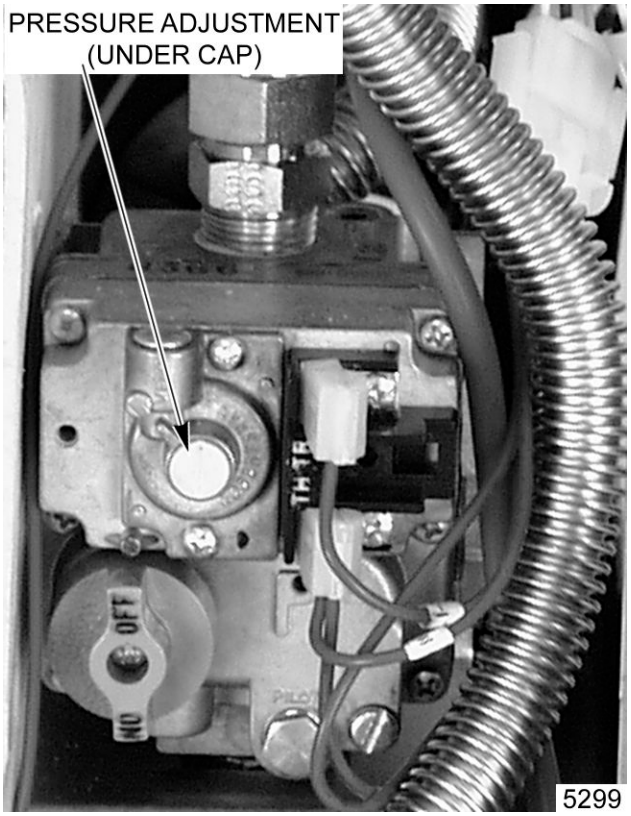

FIRST GENERATION UNIT SHOWN (Before April 2005)

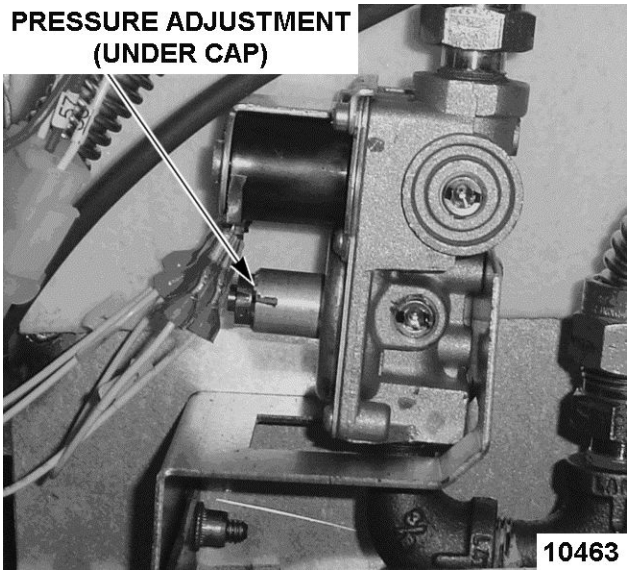

SECOND GENERATION UNIT SHOWN (After April 2005 thru February 2015)

5. Remove adjustment screw cap from the gas valve and turn gas supply to the oven back on.
6. Plug the unit in and turn the power switch ON.
7. Set the temperature control to its highest setting and allow burner to ignite.

NOTE: The burner must be lit during test and adjustment.

8. Turn the set screw to obtain the proper gas pressure (*clockwise* = pressure increase; *counterclockwise* = pressure decrease).

NOTE: Accurate gas pressure adjustments can only be made with the gas on and the burner lit.

GAS TYPE	PRESSURE READING (IN W.C.)			
	MANIFOLD	LINE		
		RECOMMEND	MIN	MAX
Natural	3.5	7.0	5	14
Propane	10	11.0	11	14

NOTE: If the incoming line pressure to the valve is **less** than the minimum stated, then the manifold pressure can not be set correctly.

GAS VALVE PRESSURE CHECK



⚠ WARNING

Disconnect the electrical power to the machine and follow lockout / tagout procedures.

1. Turn gas supply off at manual shutoff valve.
2. Remove the RIGHT SIDE PANEL.

NOTE: If right side panel is not accessible, this component can be serviced by removing the CONTROL PANEL.

3. Remove the plug from the manifold pressure port.

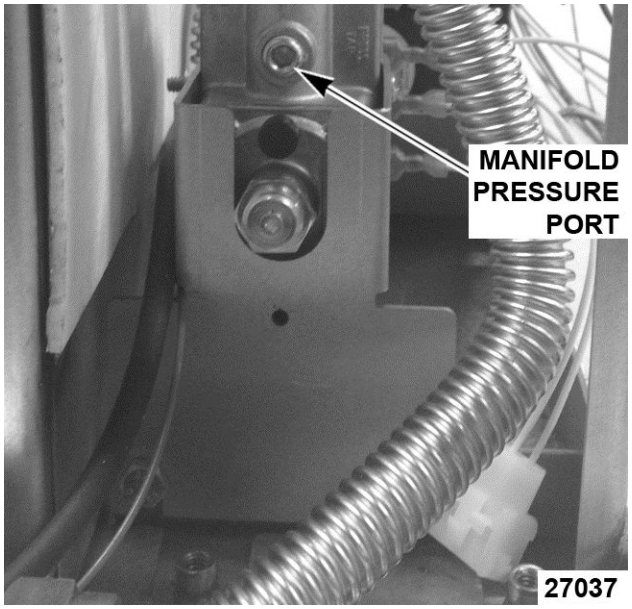

Fig. 68

4. Install hose barb adapter and attach manometer tube.
5. Turn gas supply to the oven back on.
6. Plug the unit in and turn the power switch ON.
7. Set the temperature control to its highest setting and allow burner to ignite.

NOTE: The burner must be lit during test.

NOTE: Accurate gas pressure readings can only be made with the gas on and the burner lit.

GAS TYPE	PRESSURE READING (IN W.C.)			
	MANIFOLD	LINE		
		RECOMMEND	MIN	MAX
Natural	5.0	8.0	6	14
Propane	10	11.0	11	14

NOTE: If the incoming line pressure to the valve is **less** than the minimum stated, then the manifold pressure will not be maintained.

NOTE: If gas valve cap is removed, or reversed for gas type, ensure sealing washer is installed between the gas valve and cap.

NATURAL GAS

- If the incoming pressure to the valve is between 6” WC and 14” for Natural gas and the manifold pressure is not maintaining 5” WC, and the cap (1, Fig. 69) is correctly positioned, replace the valve.

PROPANE

- If the incoming pressure to the valve is between 11” WC and 14” for Propane gas and the manifold pressure is not maintaining 10” WC, and the cap (1, Fig. 70) is correctly positioned, replace the valve.

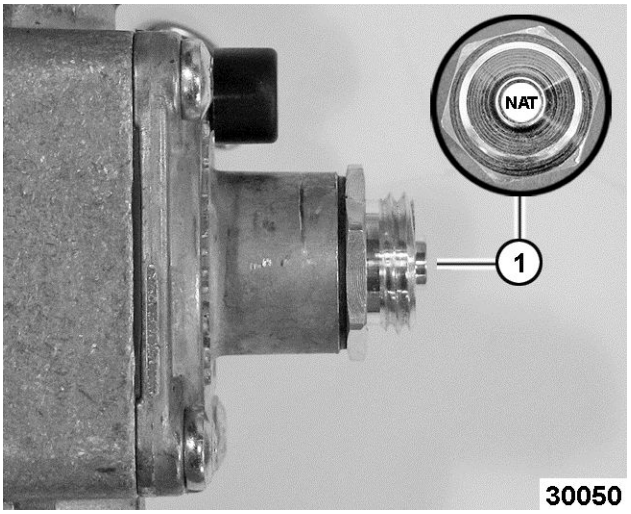

Fig. 69

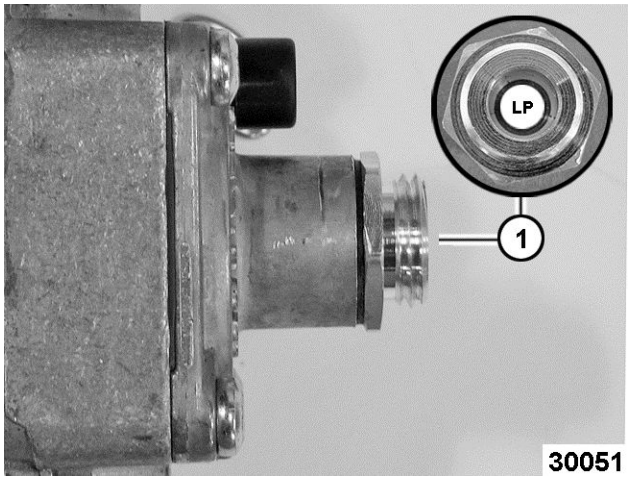

Fig. 70

ITEM	DESCRIPTION
1, Fig. 69	Cap position for natural gas (stamped NAT).
1, Fig. 70	Cap position for propane gas (stamped LP).

VERIFICATION OF SPARK AT IGNITOR



⚠ WARNING

Disconnect the electrical power to the machine and follow lockout / tagout procedures.

⚠ WARNING

SHUT OFF THE GAS BEFORE SERVICING THE UNIT.

1. Remove the Bottom Front Cover.
2. Disconnect the high voltage "ignition cable" from the spark ignitor.

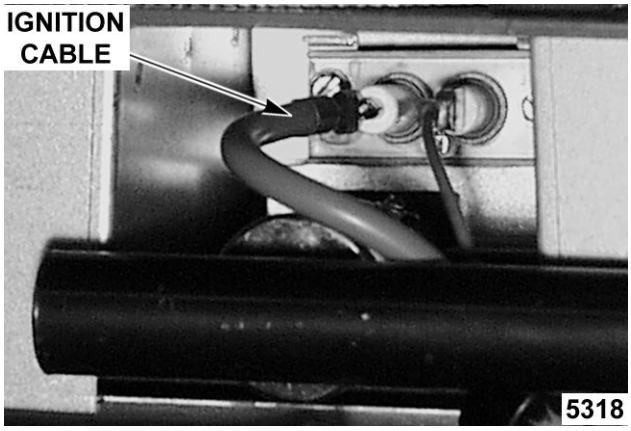

Fig. 71

⚠ WARNING

DO NOT HOLD THE WIRE WITH YOUR HANDS FOR THIS TEST. THE MANUAL GAS VALVE MUST BE CLOSED.

3. Clamp the ignition cable in a manner that will position the end of the cable 3/16" from the oven frame (bare metal surface).

NOTE: It is critical that the cable be held 3/16" away from the surface of the oven frame or sparking may not occur even though the sparking circuit is functioning properly.

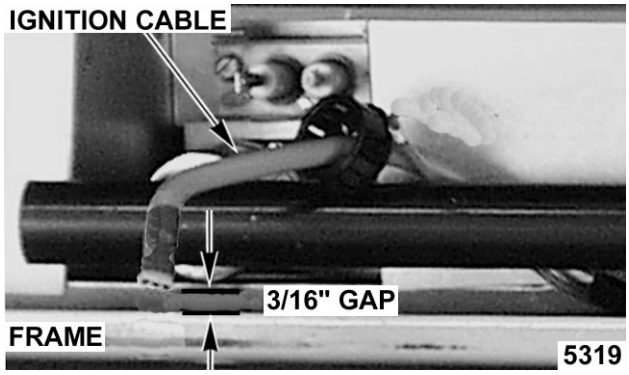

Fig. 72

4. Plug the oven in and set the temperature control to the maximum setting.
5. Turn the power switch ON.
6. Sparking should occur after a 4 second delay, for a duration of 7 seconds then repeat twice after a 15 second purge time. Arching from the ignition cable to the oven frame should be observed.

DOOR SWITCH ADJUSTMENT



⚠ WARNING

Disconnect the electrical power to the machine and follow lockout / tagout procedures.

1. Remove TOP FRONT COVER
2. Door operation:
   - A. Independent doors - The switch actuator should be operated by the switch lever when the right door is between 1" and 1 ½ " from being closed.
   - B. Simultaneous doors - The switch actuator should be operated by the switch lever when the right door is ½ " from being closed.

3. If adjustment is necessary, bend the switch actuator to obtain the proper setting.

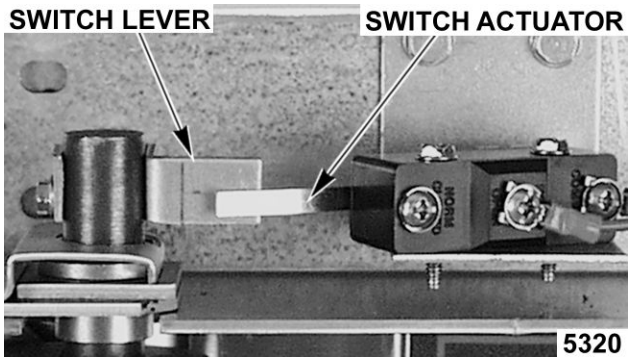

Fig. 73

4. Install the top front cover.
5. Apply power to the oven and check for proper operation.

BLOWER ADJUSTMENT



⚠ WARNING

Disconnect the electrical power to the machine and follow lockout / tagout procedures.

⚠ WARNING

SHUT OFF THE GAS BEFORE SERVICING THE UNIT.

1. Remove the blower motor and mounting assembly by following steps 1 through 8 as outlined under BLOWER AND MOTOR.
2. Loosen the motor mounting bolts.
3. Adjust the motor position until the blower is parallel to and 1/4 inch away from the motor mounting plate. Check for squareness of the blower to the motor mounting plate at the top, bottom, left and right of the blower.
   A. If the blower is square then tighten motor mounting bolts and proceed to Step 4.
   B. If the blower is not square continue adjusting until proper spacing is achieved then tighten motor mounting bolts.

NOTE: If necessary, place shims between motor and frame.

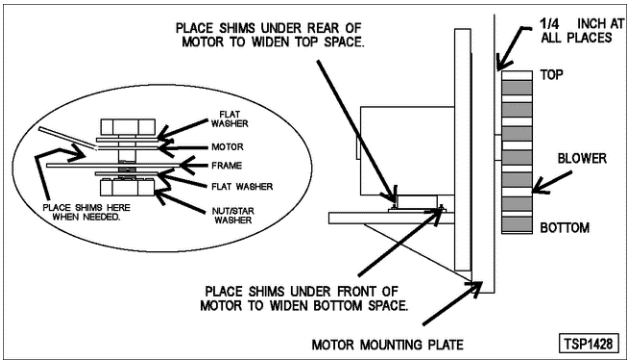

Fig. 74

4. Reverse the procedure to install.

DOOR ADJUSTMENT



⚠ WARNING

Disconnect the electrical power to the machine and follow lockout / tagout procedures.

1. Check the doors to make sure they have a .125 (1/8") gap between them and that the vertical edge of the door is parallel to the vertical door seal. If the doors are not positioned in this manner, adjust the doors as described.

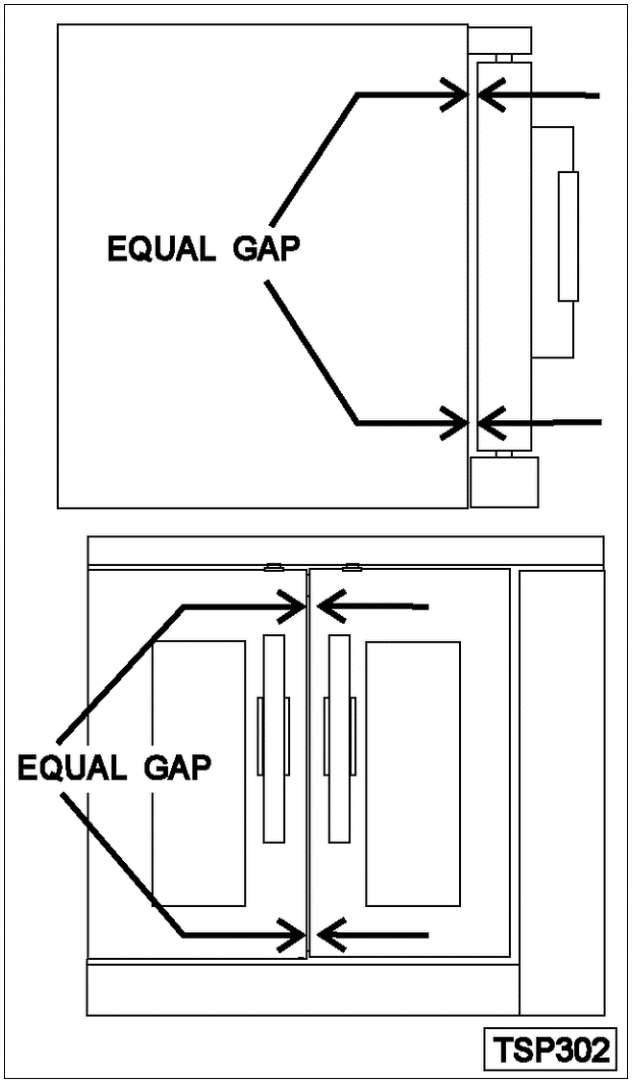

Fig. 75

2. Remove the .
3. Loosen the screws/bolts that secure the upper door brackets just enough to allow door movement.

   Figure Shown below (Left Side) is ending at Serial Number 481907145.

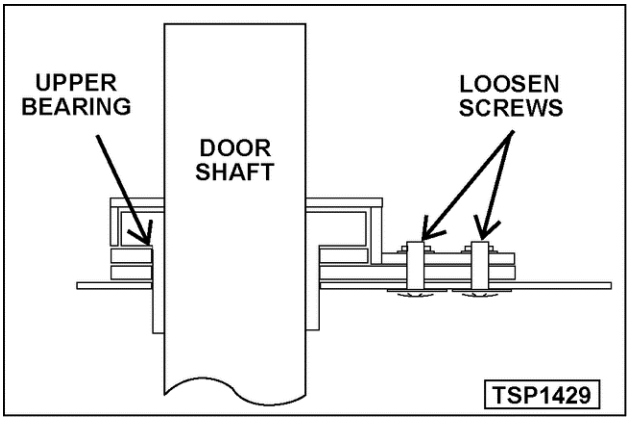

Fig. 76

Figure shown below (Left Side) is starting at Serial Number 481907146.

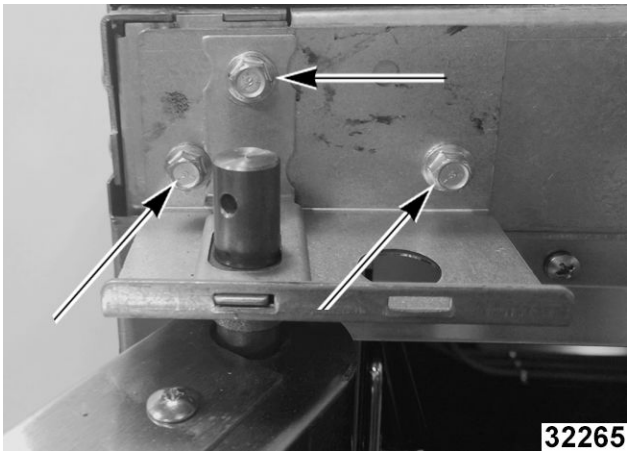

Fig. 77

4. Move the door until proper alignment is achieved then tighten the screws/bolts on the upper door bearing hardware.
5. Repeat and on the opposite door, if necessary.
6. Install

DOOR STRIKE ADJUSTMENT (INDEPENDENT DOORS)

NOTE: For units with serial number starting with 48 made after 8/12/07 and serial number starting with 54 made after 8/26/07.



⚠ WARNING

Disconnect the electrical power to the machine and follow lockout / tagout procedures.

1. Remove Top Front Cover.
2. Open the doors and inspect door strike for proper shape.

A. Replace if bent. Do not bend strike plate.

B. If adjustment is necessary, loosen fasteners, close doors and insure contact between door inner surface and upper horizontal seal. Slide door strike plate until contact with roller latch is made. Tighten strike plate fasteners.

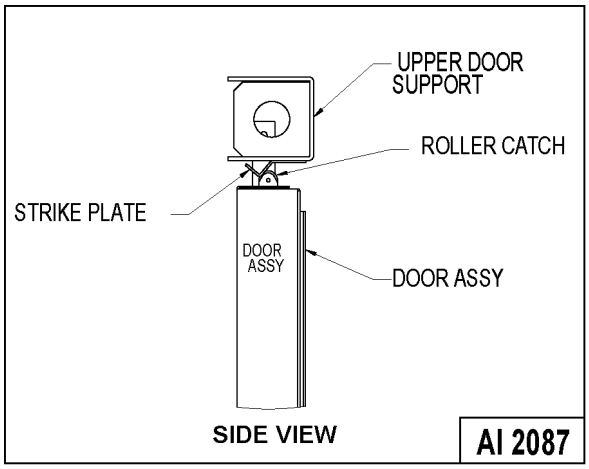

Fig. 78

3. Open and close the doors several times while observing the roller latch and strike plate operation.

   A. Replace roller latch if malfunctioning as outlined under ROLLER LATCH ASSEMBLY (INDEPENDENT DOORS) and adjust as outlined in this procedure.

4. Each oven door should open with a force of 8 to 25 pounds when pulled at the handle. The adjustments must allow the doors to remain closed during normal operation and allow opening without exertion by the user.

DOOR CATCH BALL ADJUSTMENT (INDEPENDENT DOORS)

NOTE: For units with serial number starting with 48 made before 8/13/07 and serial number starting with 54 made before 8/27/07.



⚠ WARNING

Disconnect the electrical power to the machine and follow lockout / tagout procedures.

1. Remove Top Front Cover.

2. Open the doors and inspect door strike for proper shape.

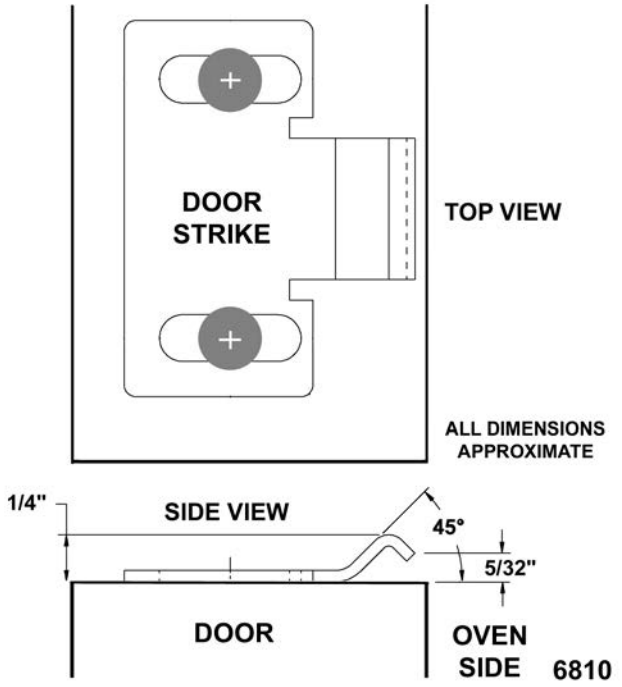

Fig. 79

   A. Replace if bent and adjust as outlined in this procedure.

3. Open and close the doors several times while observing the catch ball operation.

   A. Replace if malfunctioning and adjust as outlined in this procedure.

NOTE: Shims may be required under the door strike, before the proper door tension adjustment can be set.

4. Apply lubricant at the top of the door catch assembly to lubricate the internal spring. See LUBRICATION.

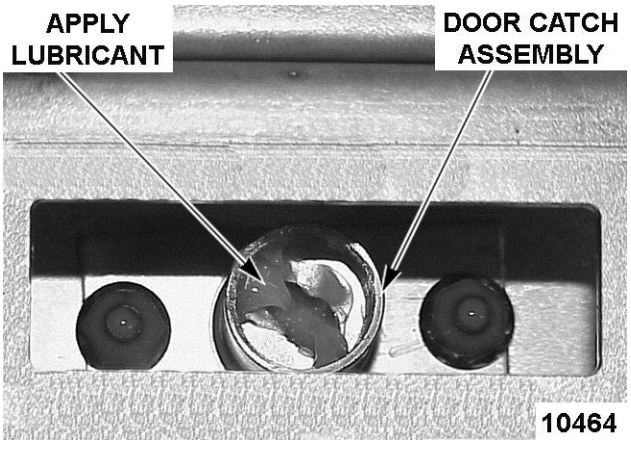

Fig. 80

5. Close the doors and check them for proper alignment.

A. Doors should be centered and parallel at the top and bottom in the oven cavity opening as outlined under DOOR ADJUSTMENT.

6. Open right side door and view the left side catch ball and door strike position. Ensure catch ball is resting upon the angular surface of door strike. Repeat on opposite door.

NOTE: If catch ball is striking the flat surface on door strike, shims will be required under the door catch assembly.

NOTE: The catch ball should make contact near the center of door strike.

A. If adjustment is necessary, loosen mounting screws then slide door strike from front to back until roller ball rests upon the angular surface of the door strike. Tighten screws and check operation.

B. If proper adjustment cannot be achieved, add shims beneath the door strike. Repeat step 6.

NOTE: DO NOT BEND THE DOOR STRIKE.

7. Each oven door should open with a force of 8 to 25 pounds when pulled at the handle. The adjustment must allow the doors to remain closed during normal operation and allow opening without exertion by the user.

NOTE: The amount of tension on catch ball determines the opening force of door.

A. Adjust catch ball tension as follows:

1) Turn set screw inside the catch assembly housing *clockwise* to increase tension on catch ball and *counterclockwise* to decrease tension on catch ball.

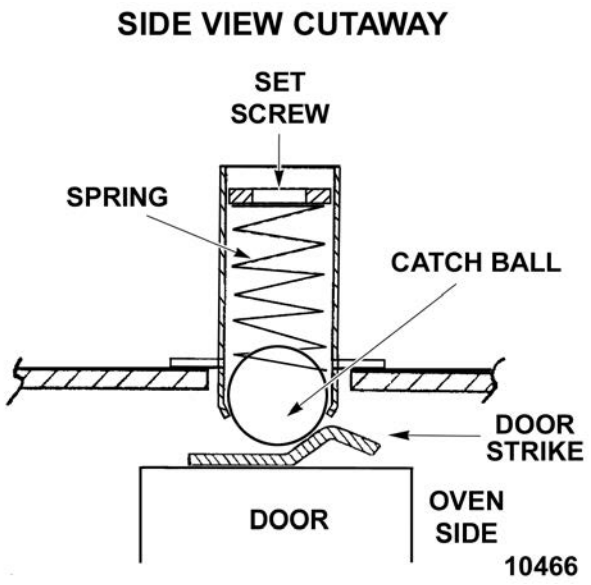

Fig. 81

2) Continue adjustment until proper door operation is achieved.

DOOR CHAIN ADJUSTMENT (SIMULTANEOUS DOORS)

Introduction

When the oven doors are in proper adjustment, as the doors come together, the right door will lead the left door in closing by about 1/4 inch. The doors will feel like they are self closing the last ½ inch of travel.

Procedure

1. Remove the Bottom Front Cover .
2. Close doors and check door chain for factory setting.
   A. Turnbuckles should be 5 to 5 ½ inches apart.
   B. Short eye bolt should be connected to the end of the chain that goes to the front of the sprocket.
   C. 2 links of the chain should not be engaged at the rear of the sprocket.
   D. Chain must be tight enough that the doors move simultaneously when opened or closed.
   E. When the doors are opened, the turnbuckles will move away from each other.
   F. The stop cable must be positioned where it moves freely and does not get pinched.
3. Position door chain assembly to factory setting if the conditions in step 2 are not met.

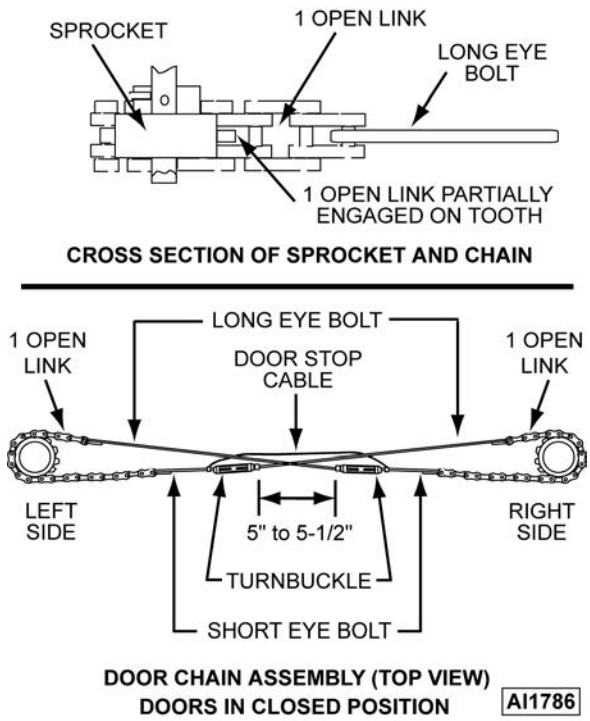

Fig. 82

4. If right door does not lead the left door in closing:
   A. Loosen locknuts on both turnbuckles.
   B. Loosen left turnbuckle.
   C. Tighten right turnbuckle.
   D. Tighten locknuts on both turnbuckles.
5. If the right door leads the left door by more than 3/8 inch:
   A. Loosen locknuts on both turnbuckles.
   B. Loosen right turnbuckle.
   C. Tighten left turnbuckle.
   D. Tighten locknuts on both turnbuckles.
6. Check door for proper operation.

NOTE: The locknuts must be tight during testing or the adjustment will not hold.

   A. If doors do not close properly, repeat Step 4, 5 and 6.
   B. If doors operate properly, continue to step 7.

7. Install the lower front cover.

COMPUTER CONTROL (VC4GC/ VC6GC)

Operation
Refer to the Instructions Manual for specific operating instructions.

Setup Mode
NOTE: Use the setup mode to **verify** that the control is configured to the factory settings which result in the proper operation of the oven. If the CAL1 parameter is other than zero, determine if it is still needed before resetting to zero. See COMPUTER CONTROL CALIBRATION (VC4GC/VC6GC).

NOTICE

Changing the C_F, InP1, rL1 & rH1 parameters will default **all** menus.

1. Use this key sequence to access the setup mode.

   Up arrow; Rack 1; Temperature; Temperature; Down arrow; Rack 1

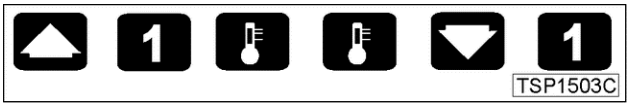

Fig. 83

2. Once in the setup mode the display will alternate between the parameter and programmed data.
   - To change data to the factory setting, use the arrow keys.
   - To select the next parameter, press the Rack 1 key.
   - After the last Parameter and Data is viewed, press the Rack 1 key a final time to exit the setup mode and return to operations mode. The current set point temperature will be displayed.
   - After 1 minute of no key activations, the control will return to operation mode.
3. Listed are the parameters and data you should find.

MENU	ALTERNATING ON DISPLAY	
	PARAMETER	DATA
Celsius_Fahrenheit	C_F	F
Guard Band	gb	4000
Temperature Compensation	tcnP	OFF
Input Type 1	InP1	J
Range Low 1	rL1	75
Range High 1	rH1	500
Hysteresis	HYS1	3
Calibration Offset	CAL1	0

MENU	ALTERNATING ON DISPLAY	
	PARAMETER	DATA
Exit Setup Mode and return to Operation Mode.	set point temperature is displayed or if call for heat, dashes (----) displayed.	

Probe Test

1. Set the control to 350°F.
2. Access the back of the control panel to disconnect the probe lead wires.
3. Install a jumper wire across the probe terminals. This will simulate room temperature.
   A. If the heat light comes on and the actual temperature is room temperature, replace the probe.
   B. If the heat light does not come on or the actual temperature is not room temperature, replace the control.

Solid State Relay Test

1. Remove the Right Side Panel.
2. Set the temperature to 350°F or high enough to keep the heat ON for several minutes.
3. Check for +5 VDC on input side of SSR (terminals 3 & 4).
   A. If +5 VDC is present, continue to step 4.
   B. If no voltage is present, computer control is not functioning properly.
4. Check for 120 VAC at load side of SSR (terminals 1 & 2).
   A. If no voltage is present, solid state relay is not functioning properly.
      1) Replace the SSR and check for proper operation.
   B. If 120 VAC is present, component is functioning properly.
5. Re-assemble oven and check for proper operation.

COMPUTER CONTROL CALIBRATION FOR WATLOW CONTROLLER (VC4GC/VC6GC)

1. Place a thermocouple in the geometric center of the oven cavity.
2. Press the set key then temperature key to enter the temperature set mode.
   A. The display will alternate between the term "StPt" (set point) and the current oven temperature setting.
   B. Press the up or down arrow keys to make the proper selection.
   C. Press the set key again to save the change and exit the temperature set mode.
3. Allow the oven temperature to stabilize (normally 3 cycles).
4. Set the ON-OFF-COOL DOWN switch to ON.
   A. If the set point temperature is 350°F, proceed to step 4.
   B. If the set point temperature is other than 350°F, proceed to step 3 to change the temperature.
5. Compare the controls set point temperature to the thermocouple meter reading when the heat light goes out.
   A. A temperature variance **more** than 5°F indicates an adjustment is needed.
      1) To make the adjustment, proceed to step 6.
      2) If temperature variance is **less** than 5°F, computer control is functioning properly.
6. Enter the .
   A. Advance through the menu until CAL1 (Calibration Offset) appears.
      1) If the thermocouple reading is higher than set point temperature, press the down arrow key and enter a negative offset value that is equal to the number of degrees above the 5°F tolerance.
      2) If the thermocouple reading is lower than set point temperature, press the up arrow key and enter a positive offset value that is equal to the number of degrees below the 5°F tolerance.
      3) Exit the setup mode.
7. Allow the oven to cycle at least two times between adjustments.
   A. If the temperature variance still differs **more** than 5°F from the set point, verify the correct calibration offset value was entered and retained.
      1) Adjust the calibration offset value as outlined in step 6, until the cycling temperature is within tolerance.

B. If the above adjustment cannot be obtained, replace the computer control and check for proper operation.

FLAME SENSE CURRENT TEST



⚠ WARNING

Disconnect the electrical power to the machine and follow lockout / tagout procedures.

1. Remove screws securing right side of the top front cover, bottom front cover and control panel.
2. Remove right side panel mounting screws.

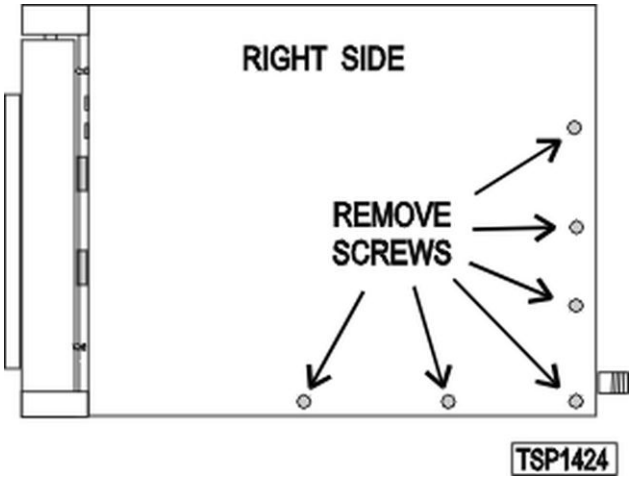

Fig. 84

3. Pull right side panel out from the bottom then down to remove.
4. Remove top screw and loosen bottom screw securing the ignition control module mounting bracket.

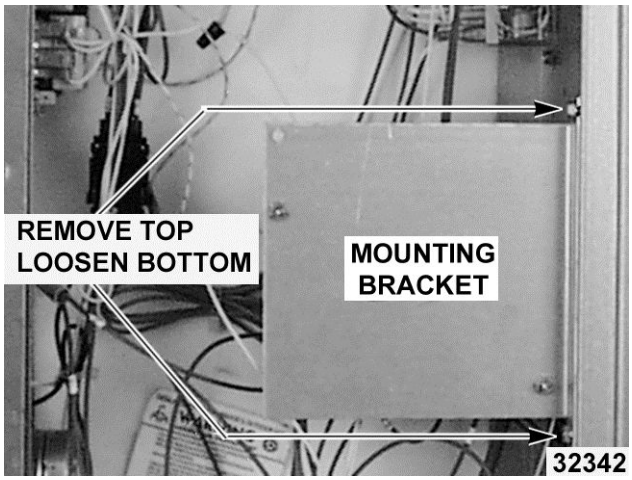

Fig. 85

5. Position bracket horizontally by pulling forward 90 degrees, with ignition module facing up for accessibility.
6. Re-apply power to unit.
7. Set VOM meter to read Micro Amps.
8. Place red (Positive) lead on FC+ and black (Negative) lead on FC- terminals on ignition module to test.

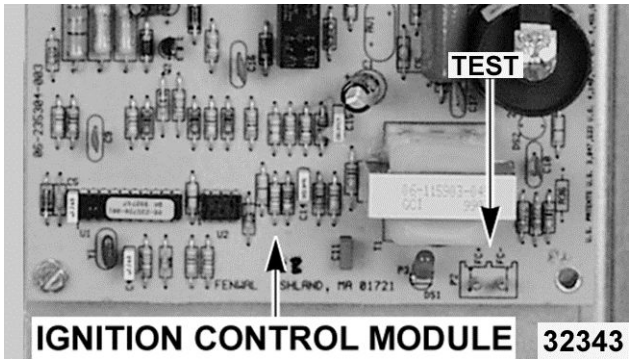

Fig. 86

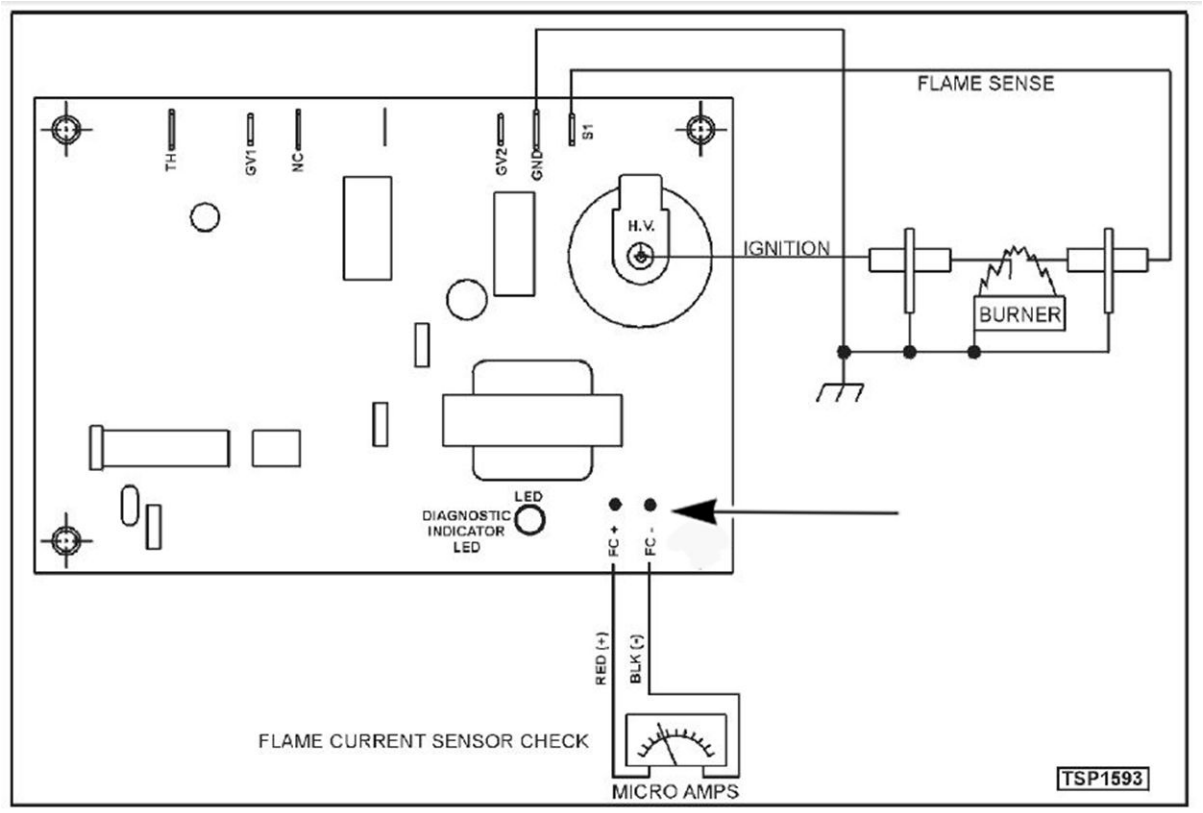

Fig. 87

9. Set the oven to call for heat and measure the Micro Amps reading.

   NOTICE

   Micro Amp reading from the flame sensor should measure a minimum of 0.7 Micro Amps to maintain burner ignition.

   - If Micro amp reading is correct and the burner lights but does not maintain flame, replace ignition module.
   - If Micro Amp reading is **NOT** correct, check wiring from flame sensor/igniter to the ignition module. If wiring is OK, adjust, clean or replace flame sensor/igniter.

10. Install ignition control module mounting bracket and right panel.
11. Verify operation.

SERVICE PROGRAMMING AND TESTING FOR 3700 COMPUTER CONTROL

NOTE: Press X to go back to previous screen. User interface system menu program instructions for **MENU PRG** and **USB** are located in COMPUTER CONTROLS GUIDE.

SYSTEM DIAGNOSTIC

1. Press **Program**.

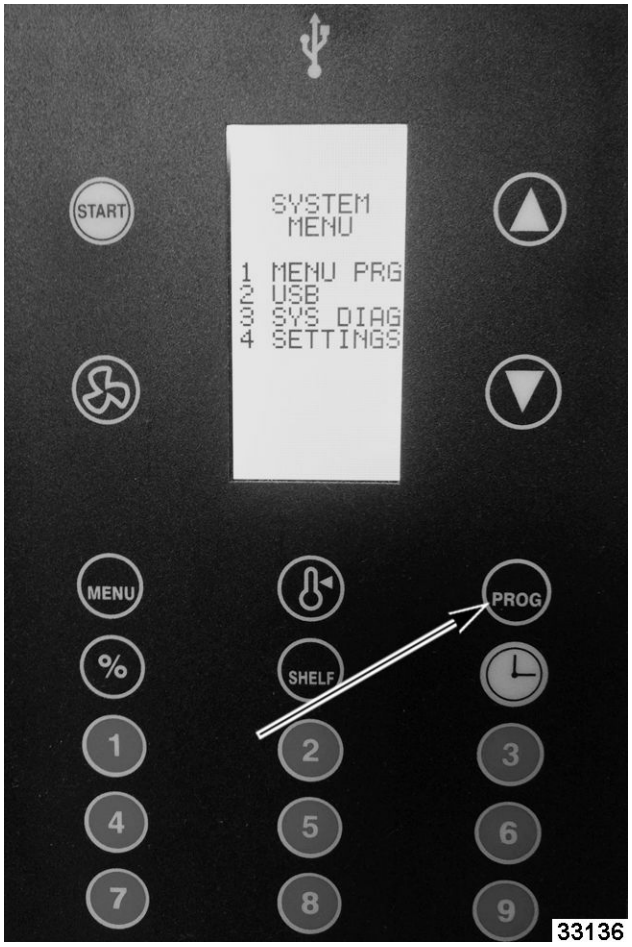

Fig. 88

2. Press number **3** for **SYS DIAG.**
    - System Diagnostic menu will appear.

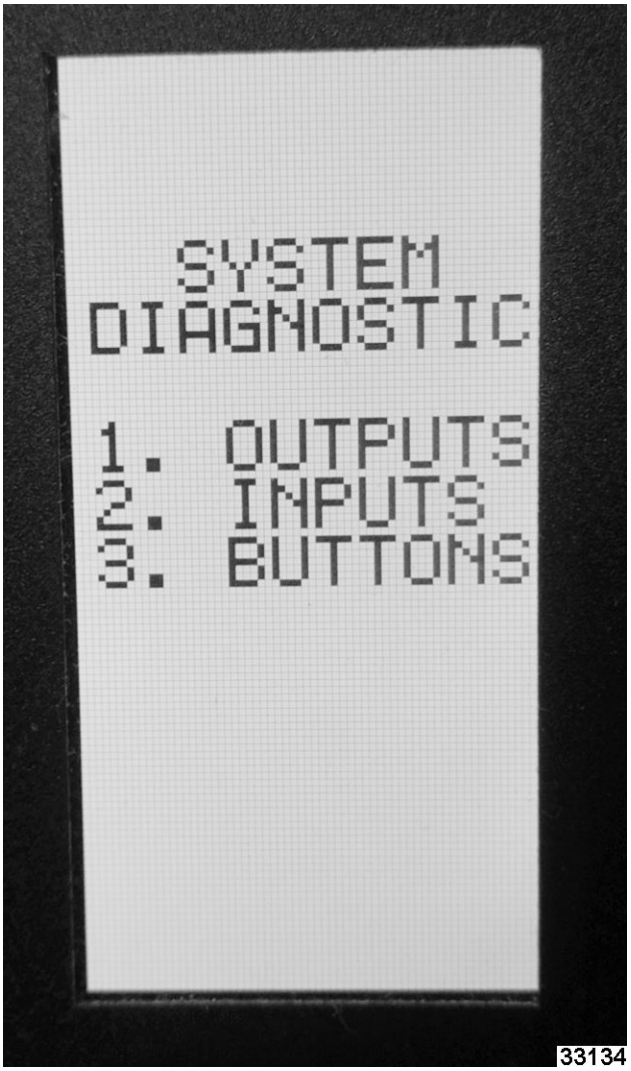

Fig. 89

- 1. **OUTPUTS**



Fig. 90

- Press corresponding number for testing function selection. Example: Press **1** to test Fan function.

- 2. **INPUTS**



Fig. 91

- Check status of a function. Example: Door is open or close.

- 3. **BUTTONS**

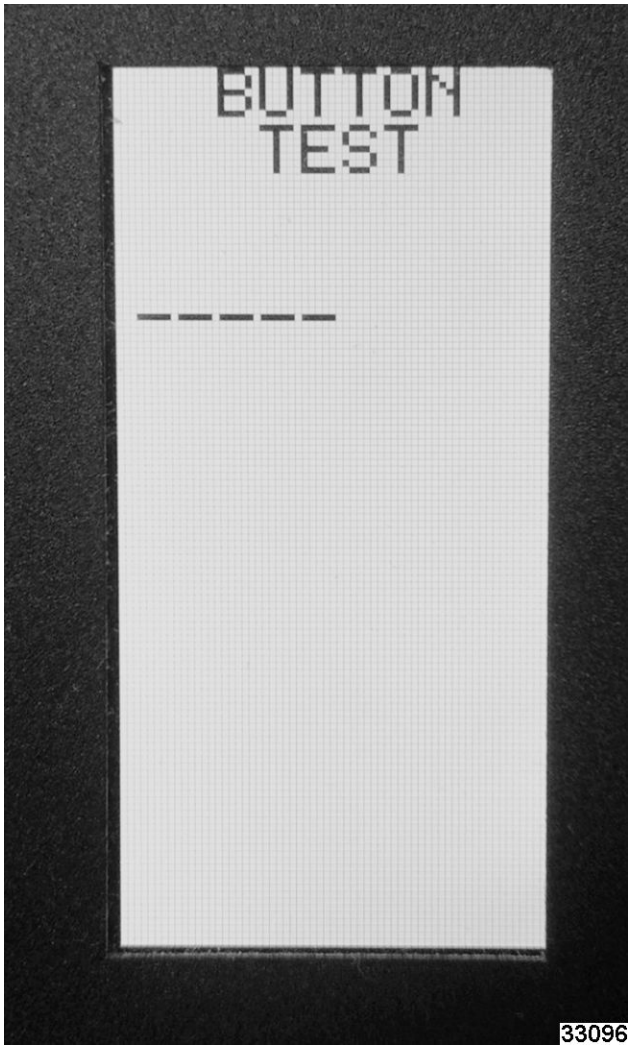

Fig. 92

- Button test verifies each button is programed and working. Example: Push a button on the keypad to verify it is connected and working. Each buttons function shows on display.

SYSTEM SETTINGS

1. Press **Program**.



Fig. 93

2. Press **4** for **SETTINGS**.
   - System Settings menu will appear.



Fig. 94

- Press corresponding number to change settings. Example: Press **4** to change **HEAT** to Electric.

SETTING TEMPERATURE OFFSET

- Check center of oven temperature with temperature tester.
- Press number **6**.
- Use arrow keys to offset **DISPLAY** temperature setting to match center of oven temperature.

CONVECTION MOTOR CENTRIFUGAL SWITCH (TEST)



⚠ WARNING

Certain procedures in this section require electrical test or measurements while power is applied to the machine. Exercise extreme caution at all times and follow Arc Flash procedures. If test points are not easily accessible, disconnect power and follow Lockout/Tagout procedures, attach test equipment and reapply power to test.

NOTE: Reference VC4GS, VC6GS Mechanical (KX) Controls or VC4GS, VC6GS Mechanical (KX) Controls, Roast & Hold Option or VC4GS, VC6GS Mechanical (KX) Controls or VC4GS, VC6GS Mechanical (KX) Controls, Roast & Hold Option.

1. Verify heat & power light are lit.
2. Verify motor is running.
3. Verify 120V is being sent to centrifugal switch.
4. Verify 120V is being sent to heat relay coil.
5. If 120V not present at heat relay coil, replace BLOWER AND MOTOR.

ELECTRICAL OPERATION

COMPONENT LAYOUT AND FUNCTION

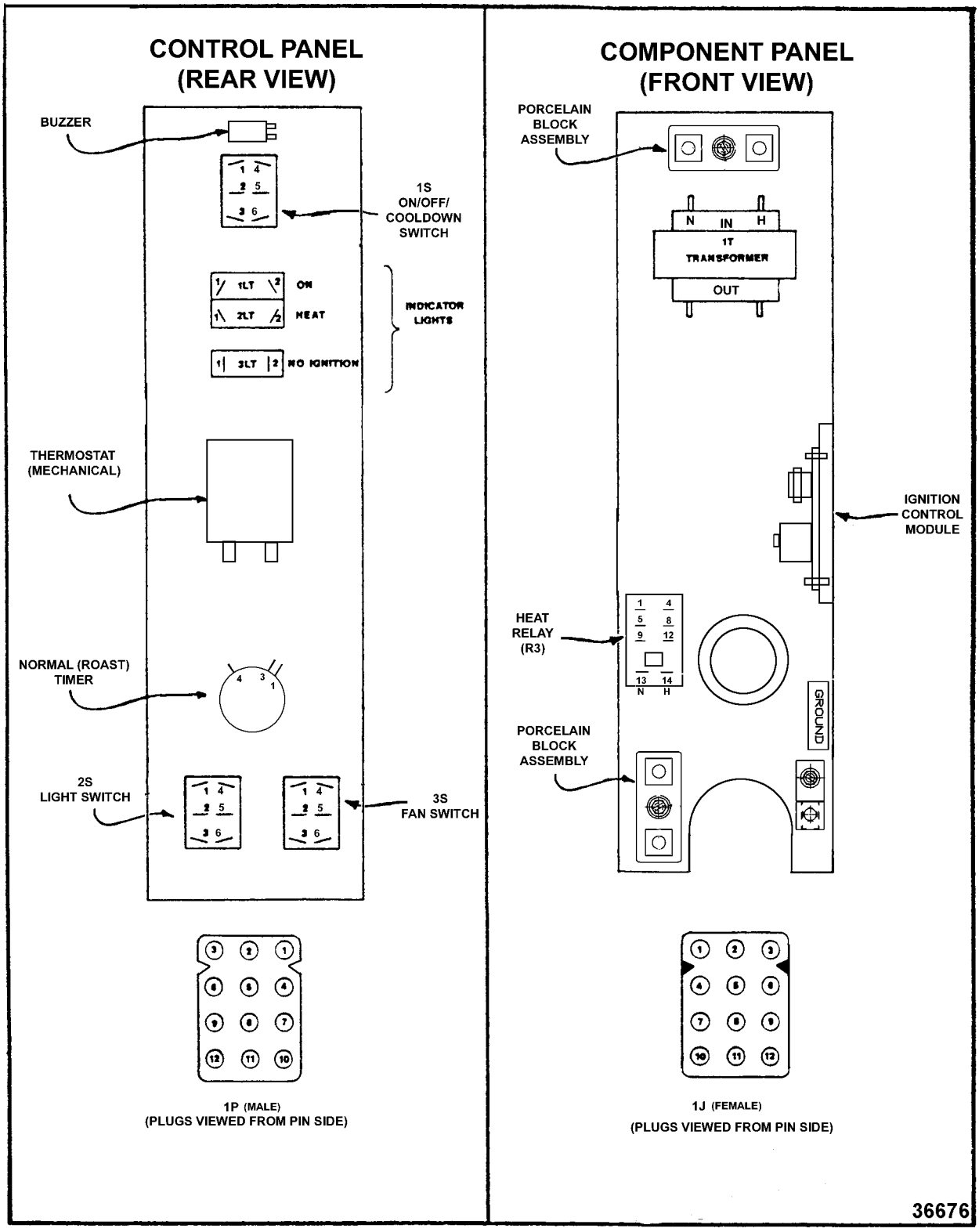

Fig. 95

Power Switch (S1)	Determines the mode of operation; ON, OFF, or COOL DOWN.
Oven Light Switch (S2)	Controls the oven cavity lights.
Fan Speed Switch Hi/ Low (S3)	Controls blower motor speed between Hi and Low settings.
Function Switch (S3)	Selects the cooking mode of the oven between Normal ROAST or ROAST & HOLD and is used in conjunction with the ROAST & HOLD timer during ROAST & HOLD cooking. The selected mode also determines the fixed blower speed of Hi for Normal ROAST and Low for ROAST & HOLD. In ROAST & HOLD mode only, energizes the hold relay (R2). Available on models with ROAST & HOLD option only. On Standard models (S3) becomes the Function Switch.
Buzzer	Signals the end of a Normal ROAST cycle (normal cooking) when time expires on the Normal ROAST timer.
Door Switch	Allows the oven to operate when the doors are closed but stops the oven from operating when the doors are opened.
Blower Motor	Operates the oven cavity blower (convection fan). Also, an internal centrifugal switch on the motor is utilized to allow the connection of power to the heat relay (R3) when the motor is at operating speed.
Motor Speed Relay (R1)	Supplies power to the blower motor through (R1) relay contacts. Available on models with Cook & Hold option only.
Hold Relay (R2)	Hold relay (R2) supplies power to the Hold thermostat for maintaining the fixed hold temperature in the oven cavity, after the ROAST & HOLD time expires.
Solid State Temperature Control	Monitors temperature sensor and regulates the oven cavity temperature by controlling the heat relay (R3) through the blower motor centrifugal switch contacts.
High Limit Thermostat	Protects the oven from temperatures above 550°F by removing power from the 1st valve (safety) on the dual solenoid gas valve which stops the flow of gas to the burner. Auto resets at 500°F.
SSR1 & SSR2	When SSR1 is energized by computer control, connects power to blower motor for Hi fan speed operation in normal ROAST mode. In ROAST & HOLD Mode only, SSR1 is de-energized and SSR2 is energized by computer control and connects power to blower motor for Low fan speed operation.
Ignition Control Module	Controls the gas ignition cycle - Energizes the 2nd valve (main) on the dual solenoid gas valve, generates spark for burner ignition, monitors the presence of a flame and controls the No Ignition light. The ignition times are: 4 second self diagnostic test (initial power ON); 7 second ignition trial; 3 ignition trials with a 15 second purge between each trial.
Igniter/Flame Sense	Ignites the gas and senses the presence of a flame. The flame presence generates a micro-amp "flame sense" current that is monitored by the ignition control module. A flame sense current of 0.7 micro amp (minimum) is required to maintain burner ignition.
Power On Light	Lit whenever the power switch (S1) is turned to ON or Cool Down mode.
Heat Light	Lit whenever temperature control is calling for heat.
No Ignition Light	Lit when power is turned ON, during ignition trial & gas purge time and when no flame is detected by flame sensor. If the oven fails to ignite after 3 attempts, it will remain lit until power is reset.
Temperature Probe . . .	Senses the oven temperature for the solid state temperature control or the computer control. Converts the temperature into a resistance valve which is monitored by the temperature control board. The probe is an RED (Resistance Temperature Detector) of the Thermistor type. As temperature increases, the resistance valve decreases.

Gas Valve (Dual Solenoid) . . . . . . Allows gas flow to the burner when the 1st valve (safety) and 2nd valve (main) solenoid coils are both energized.

Cooling Fan . . . . . . Circulates cooler air from rear of oven forward to cool components in the control area.

COMPONENT LAYOUT AND FUNCTION - STARTING SN 482080151

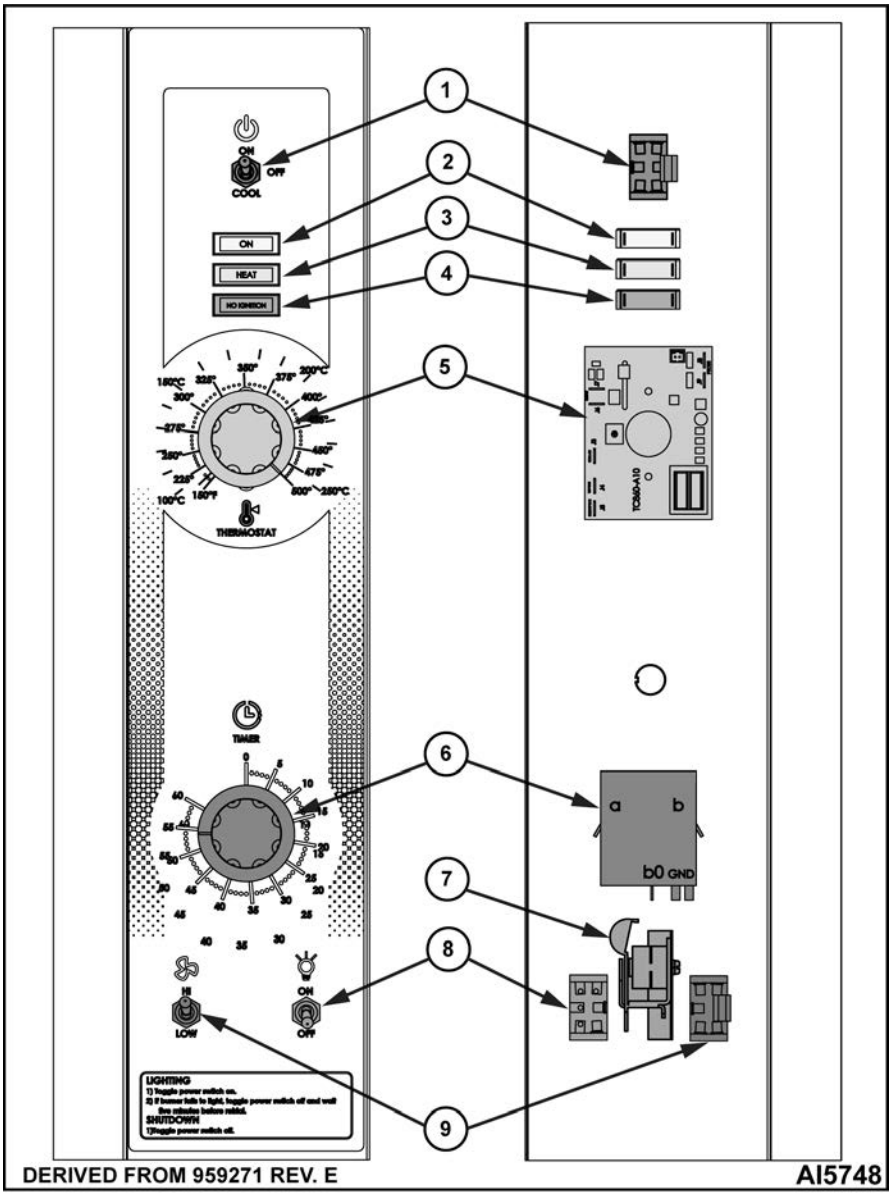

Fig. 96

Item	Name / Electrical Callout	Function
1	Power Toggle Switch (S1)	Determines the mode of operation: ON, OFF, or COOL DOWN.
2	Indicator "ON" Light	Indicates when oven is powered on.
3	Indicator "HEAT" Light	Indicates when oven is heating.
4	Indicator "NO IGNITION" Light	Indicates no flame detected by flame sensor.
5	Temperature Control	Analog temperature controller.

Item	Name / Electrical Callout	Function
6	Timer	Allows user to set cooking timer.
7	Alarm / Buzzer	Signals the end of a cook cycle when cooking time ends.
8	Oven Light Switch (S2)	Controls the oven cavity lights.
9	Fan Speed Switch (S3)	Controls blower motor speed between High and Low settings.

COMPONENT LOCATION

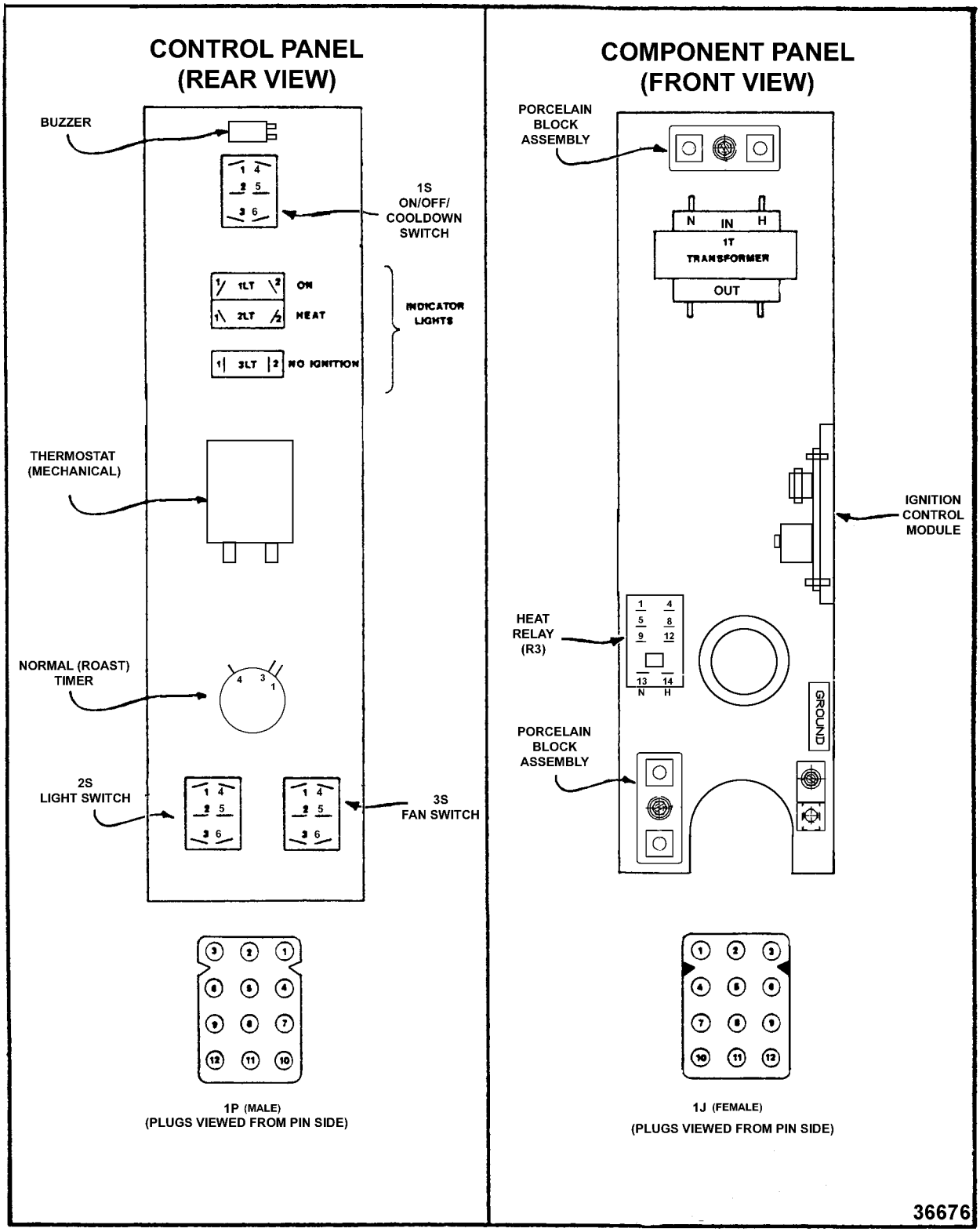

Fig. 97

SEQUENCE OF OPERATION

WKGD With Roast & Hold Option (Solid State Temperature Control)

Normal Roast Cycle

1. Conditions.
   - A. Oven connected to correct voltage.
     - 1) L1 (HOT) to power switch (S1).
     - 2) L2 (NEUTRAL or SECOND LINE) to one side of the following components: power ON light, heat light, temperature control board terminal 9 (120VAC) or terminal 10 (208- 240VAC), oven cavity lights, buzzer, "Cook" timer motor (normal cooking), "Cook & Hold" timer motor, heat relay coil (R3), convection fan motor common (C), transformer primary (T1), motor speed (Hi/Low) relay coil (R1), hold relay coil (R2) and the component cooling fan.
   - B. Oven properly grounded.
   - C. Gas supply valve ON.
   - D. Gas combination control valve ON.
   - E. Power switch (S1) OFF.
   - F. Function switch (S3) set to "Cook" cycle.
   - G. Oven light switch (S2) ON/OFF (position has no affect on the function of the "Cook" cycle).
   - H. Temperature control dial set to lowest temperature (fully *counterclockwise*).
   - I. High limit switch CLOSED.
   - J. Roast timer (normal cooking) in the OFF position.
   - K. Roast and Hold timer in the OFF position.
   - L. Oven doors Closed.
     - 1) Door switch contacts CLOSED.
   - M. Oven cavity temperature below 140°F.
2. Set temperature control dial to desired ROAST then HOLD temperature (Roast & Hold cooking).
3. Power switch (S1) turned ON.
   - A. Component cooling fan energized.
   - B. Power ON light (Amber) comes ON.
   - C. Power to one side of the following components: Normal ROAST timer terminal 1, ROAST & HOLD timer terminal 1, transformer primary (T1).

NOTE: Power is available to the oven light switch (wire #20) to turn the oven cavity lights ON when the light switch is turned ON; and power is available to the normally open N.O. side (wire #28) of the door switch contacts and connects power to additional components when the door switch contacts are CLOSED (door closed).

- 1) Transformer (T1) energized.
  - a. Power (24VAC) to one side of the following components: heat relay (R3) normally open (N.O.) contacts, high limit --- connected through the normally closed (N.C.) contacts to the 1st valve (safety) on the dual solenoid gas valve.
    - a) 1st valve (safety) on the gas valve energized.

NOTE: Gas does not flow to the burner until the 2nd valve (main) is energized.

- 2) With door switch closed, power is applied to motor speed (Hi/Low) relay (R1) normally open (N.O.) contacts and hold relay (R2) common (C).
  - a. Motor speed relay (R1) is energized through hold relay (R2) normally closed contacts (N.C.). Relay contacts (R1) change state and the normally open (N.O.) set of contacts close.
    - a) Power is connected through the function switch (S3) contacts and convection fan motor is energized (fan speed hi).
    - b) When the convection fan motor reaches operating speed, the centrifugal switch (N.O.) on the motor closes.
    - c) Power to normally open (N.O.) side of internal relay contacts (terminal 7) on the temperature control board.
- 3) Power is also connected back through a second set of contacts on the power switch (S1) to terminal 8 on the temperature control board.

a. Solid state temperature control energized. If the oven temperature is below set point, the temperature control will energize its internal relay. The normally open (N.O.) contacts close and apply power to the following components:

a) Heat light (clear) comes ON.

b) Power is connected through the centrifugal switch contacts on the convection fan motor, heat relay (R3) is energized, (R3) contacts (N.O.) close and the heating circuit is powered.

c) Ignition control module is energized.

d) No ignition light (red) comes ON, module performs a self diagnostic test for 4 seconds, 2nd valve (main) on the gas valve is energized. Gas starts to flow to the burner, sparking begins, the "no ignition" light goes out and burner lights. Sparking continues for up to 7 seconds or until a flame is established. If a flame is "sensed", the "no ignition" light stays out and burner remains lit. If a flame is not "sensed" after 7 seconds of sparking, the "no ignition" light comes back on, 2nd valve (main) on the gas valve is de-energize and gas flow to the burner stops. Ignition trial cycle repeats after a 15 second purge between cycles for two additional tries before locking out. To reset after a lockout, turn power switch (S1) OFF then ON.

4. Oven reaches set temperature.

A. Temperature control de-energizes internal relay and the normally open (N.O.) contacts OPEN.

1) Heat light goes out.

2) Power removed from heat relay (R3).

a. R3 normally open (N.O.) contacts OPEN.

a) Power removed from 2nd valve (main) on the gas valve and gas flow to the burner stops.

5. The oven will continue to cycle on the temperature control until the doors are opened or power switch (S1) is turned to the OFF or COOL DOWN position.

Timer Cycle (Normal Roast Cooking)
NOTE: The ROAST timer (normal cooking) operates independently of the heating cycle. Additional time can be set or the timer can be turned OFF throughout the cooking cycle.

1. With the power switch turned ON, power is supplied to timer.

A. Set ROAST timer to desired time (normal cooking).

B. Contacts 1 & 3 close, timer motor is energized and timing "down" begins

2. Time expires on ROAST timer (normal cooking).

A. Contacts 1 & 3 open, timer motor is de-energize and timing stops.

B. Contacts 1 & 4 close.

1) Buzzer energized and sounds.

NOTE: The buzzer continues to sound until the timer dial is set to the OFF position or additional time is set.

Cool Down Cycle (Solid State Temperature Control)
NOTE: The electrical sequence of operation for the COOL DOWN cycle is written for ovens with the ROAST & HOLD option.

1. Conditions.

A. Oven is ON.

B. Oven cavity temperature needs to be lowered.

C. Doors are open.

1) Door switch contacts OPEN

D. Cook and Hold timer in the OFF position.

E. Cook timer (normal cooking) in the OFF position.

F. Function switch (S3) set to either Normal ROAST cycle or ROAST & HOLD cycle.

2. Power Switch (S1) turned to COOL DOWN.

NOTE: With door switch contacts OPEN (doors open), the convection fan motor will still run and continue to cool the oven. However, power would be removed from the following components: Power ON light (goes out), Normal ROAST timer, ROAST & HOLD timer, transformer T1 (de-energized) and to the component cooling fan.

A. Power to motor speed (Hi/Low) relay (R1) normally open (N.O.) contacts and to common (C) on hold relay (R2). Power is then connected through hold relay (R2) normally closed (N.C.) contacts to motor speed (Hi/Low) relay (R1) coil.

1) Motor speed (Hi/Low) relay (R1) is energized and contacts change state.

a. Power is connected through motor speed (Hi/Low) relay normally open (N.O.) contacts, through function switch (S3) to Convection fan motor.

a) Convection fan motor energized.

NOTE: If function switch (S3) is set to Normal ROAST cycle, fan speed will be high; if set to ROAST & HOLD cycle, fan speed will be low.

b) When Convection fan motor reaches operating speed the centrifugal switch on the motor closes but no power is available for connection to other components.

B. Power to one side of the hold thermostat contacts but is not transferred to other components due to oven cavity temperature above 160°F (thermostat OPEN).

C. Power to terminal 7 on the solid state temperature control but is not transferred to other components due to temperature control not being powered.

3. If door switch is CLOSED (doors closed), power is supplied to one side of the following components: Power ON light (Amber), oven light switch (S2), Normal ROAST timer terminal 1, ROAST & HOLD timer terminal 1, transformer primary (T1) and component cooling fan.

A. Power ON light (Amber) comes ON.

B. Transformer (T1) energized.

1) Power (24VAC) to one side of the following components: heat relay (R3) normally open (N.O.) contacts, high limit --- connected through the normally closed (N.C.) contacts to the 1st valve (safety) on the dual solenoid gas valve.

a. 1st valve (safety) on the gas valve energized.

NOTE: Gas does not flow to the burner until the 2nd valve (main) is energized.

C. Component cooling fan.

4. The oven will remain in this condition until the power switch (S1) is turned to the OFF or ON position.

SCHEMATICS

VC4GS, VC6GS Mechanical (KX) Controls

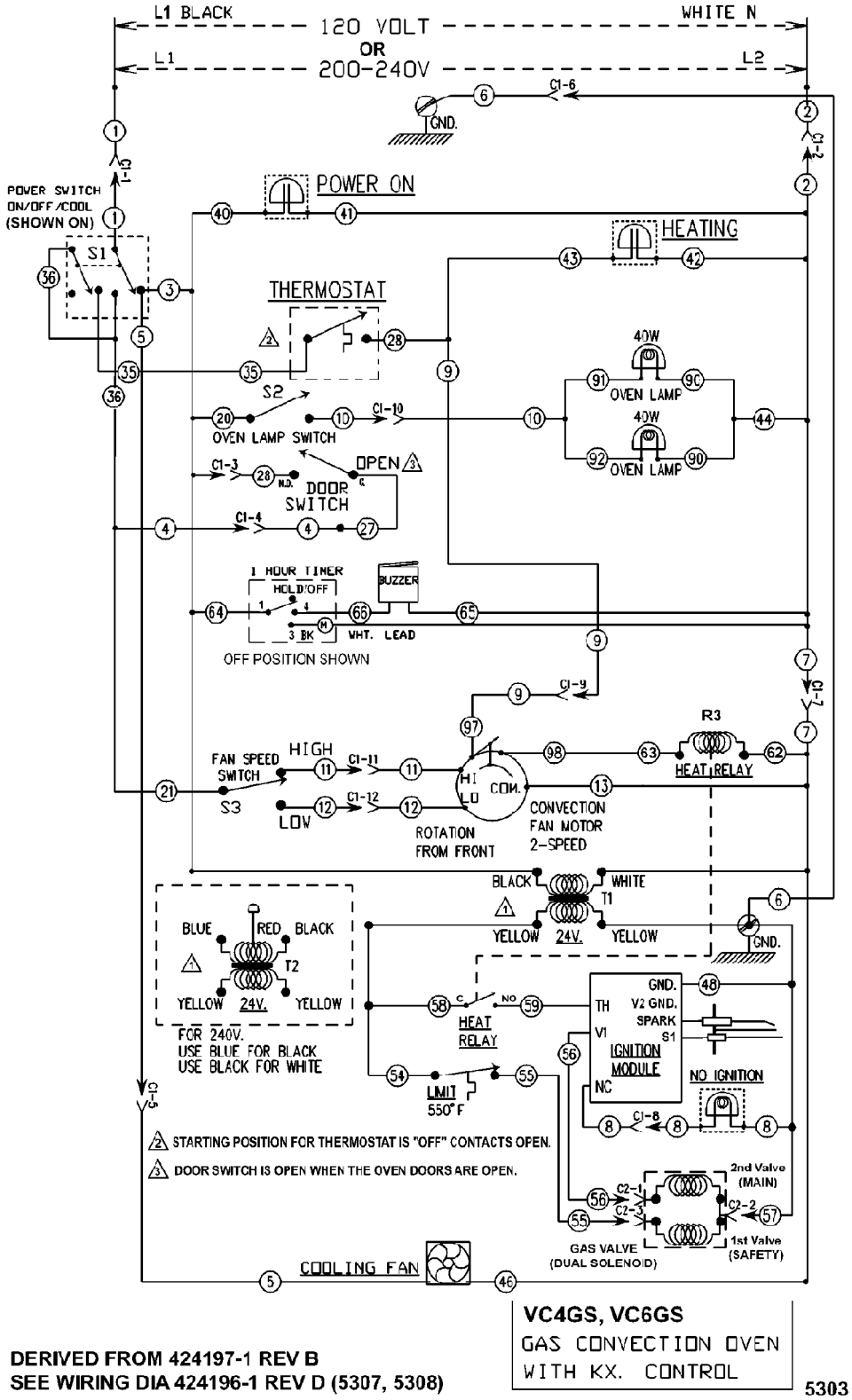

DERIVED FROM 424197-1 REV B
SEE WIRING DIA 424196-1 REV D (5307, 5308)

VC4GS, VC6GS Mechanical (KX) Controls, Roast & Hold Option

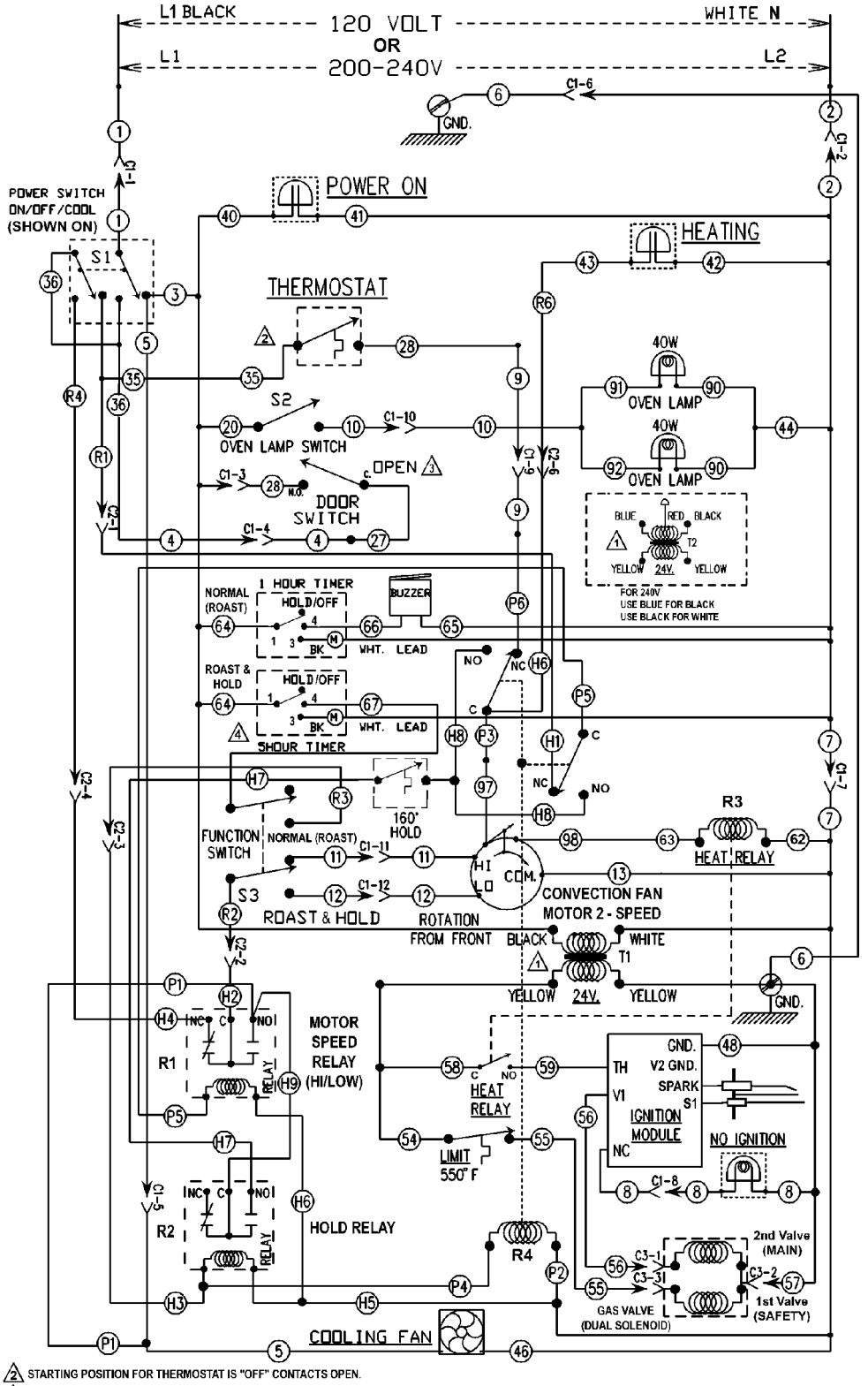

2 STARTING POSITION FOR THERMOSTAT IS "OFF" CONTACTS OPEN.

3 DOOR SWITCH IS OPEN WHEN THE OVEN DOORS ARE OPEN.

4 FOR ROAST & HOLD OPERATION, S3 MUST BE IN THE R & H POSITION AND R & H TIMER MUST BE USED.

DERIVED FROM 424823-1 REV C
SEE WIRING DIA 424822-1 (5309, 5310)

VC4GS, VC6GS
GAS CONVECTION OVEN,
ROAST & HOLD, KX CONTROL

5304

Fig. 99

VC4GD, VC6GD Solid State Temperature Control

VC4GD & VC6GD Gas Convection Oven Solid State Control
BEFORE SERIAL NUMBER 481907145

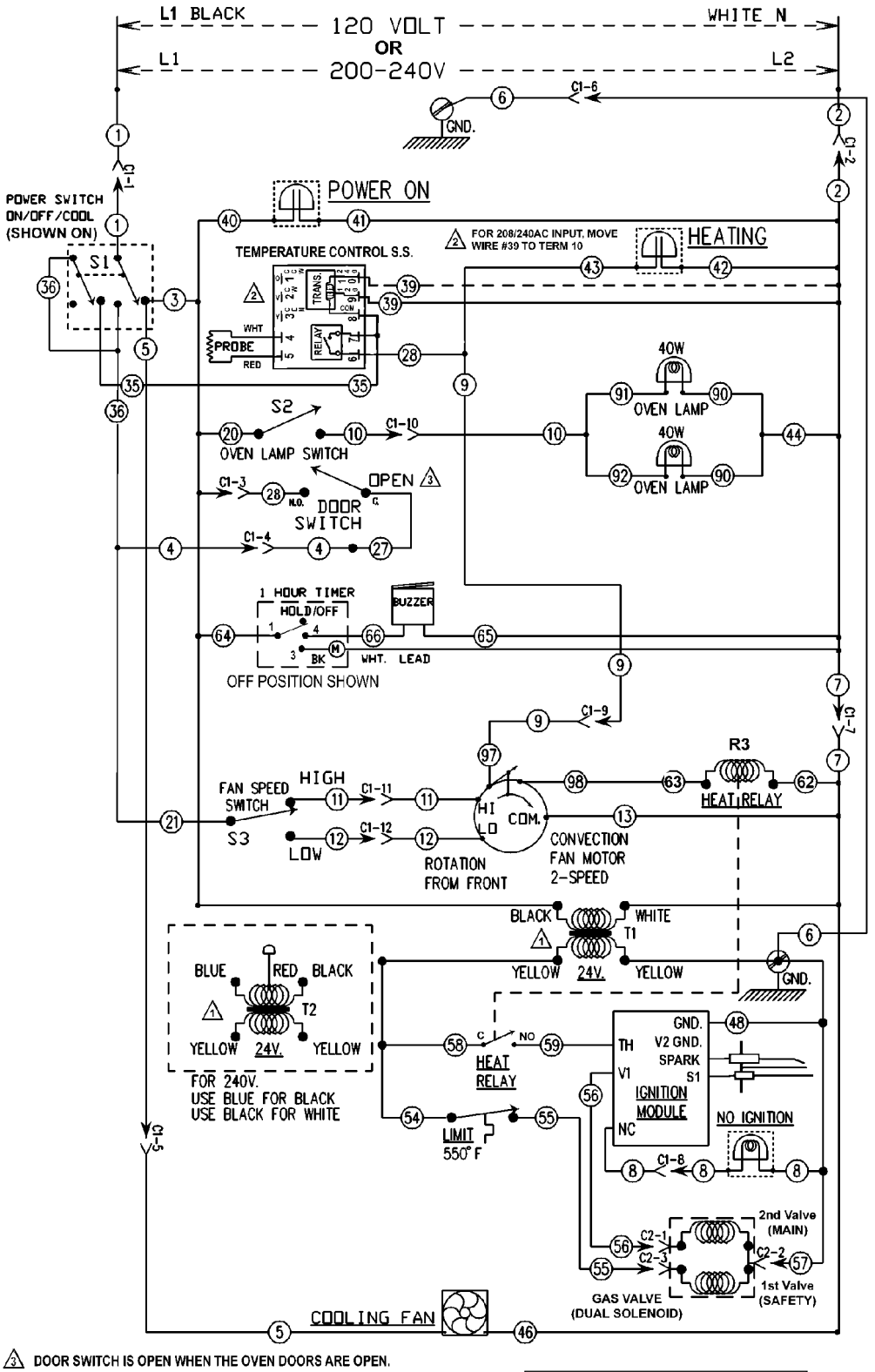

3 DOOR SWITCH IS OPEN WHEN THE OVEN DOORS ARE OPEN.

VC4GD, VC6GD
GAS CONVECTION OVEN
SOLID STATE CONTROL

5305

DERIVED FROM 424199-1 REV B
SEE WIRING DIA 424198-1 (5311, 5312)

Fig. 100

VC4 & 6GD-HGC-WKG Convec Oven with STD CNTLs - 120-240V - 00-424299-1D - AI4896 - STARTING SERIAL NUMBER 481907146 - PDF Link

VC4 & 6GD-HGC-WKG Convec Oven with STD CNTLs - 120-240V - 00-424299-1D - AI4896

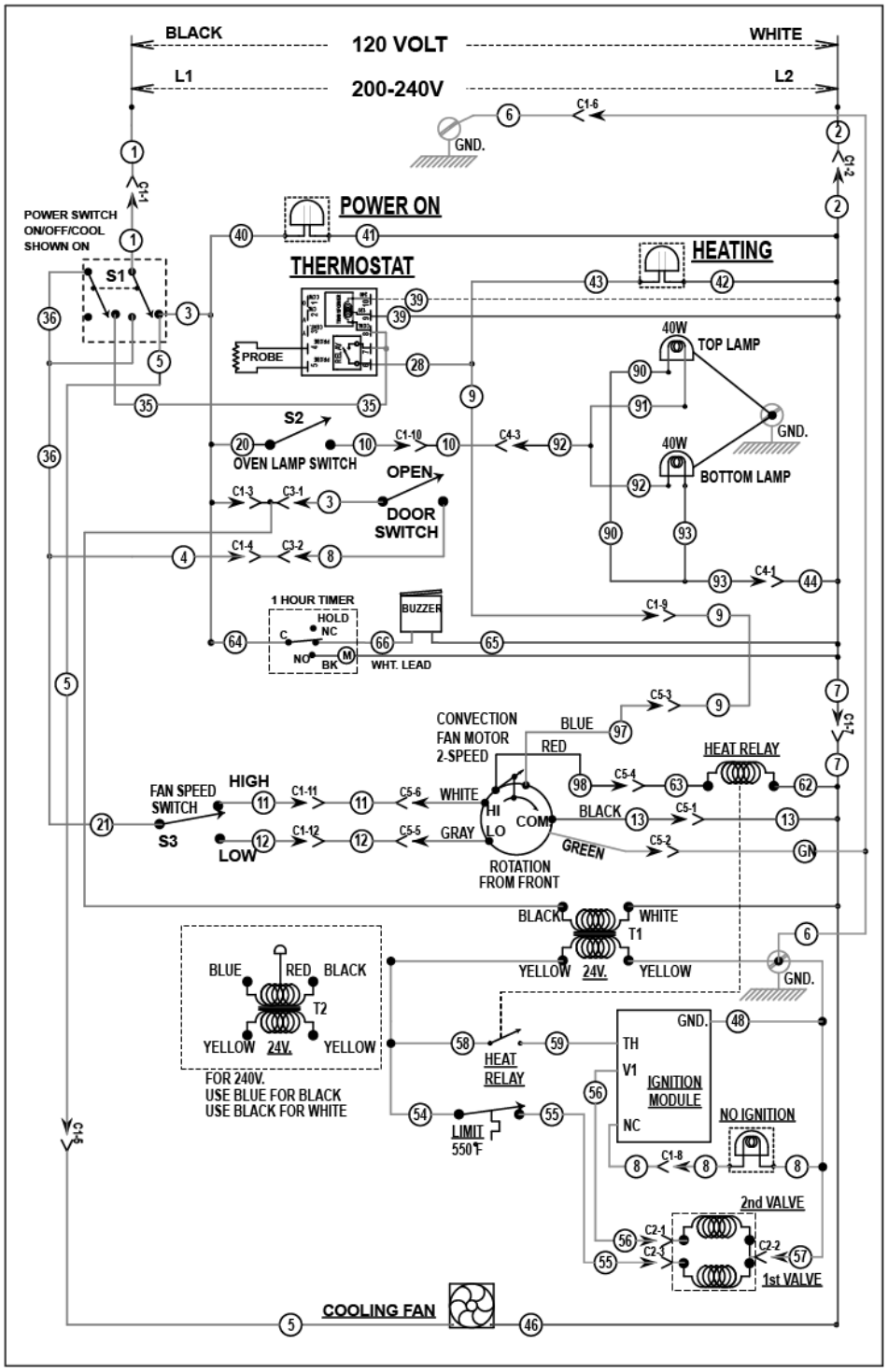

LEGEND
- L1 LINE VOLTAGE
- L2 LINE VOLTAGE
- 24V
- GND

VC4 & 6GD / HGC / WKG CONVECTION OVEN STD. CONTROLS 120 TO 240V.
DERIVED FROM 424299-1 Rev. D
STARTING SERIAL NUMBER 481907146

AI4896

STARTING SERIAL NUMBER 481907146

8½ X 11 VC4 & 6GD Gas Convection Oven Solid State Control - 120-240V - 1Ph - 00-424199F - AI5735

STARTING AT SERIAL NUMBER 482080151

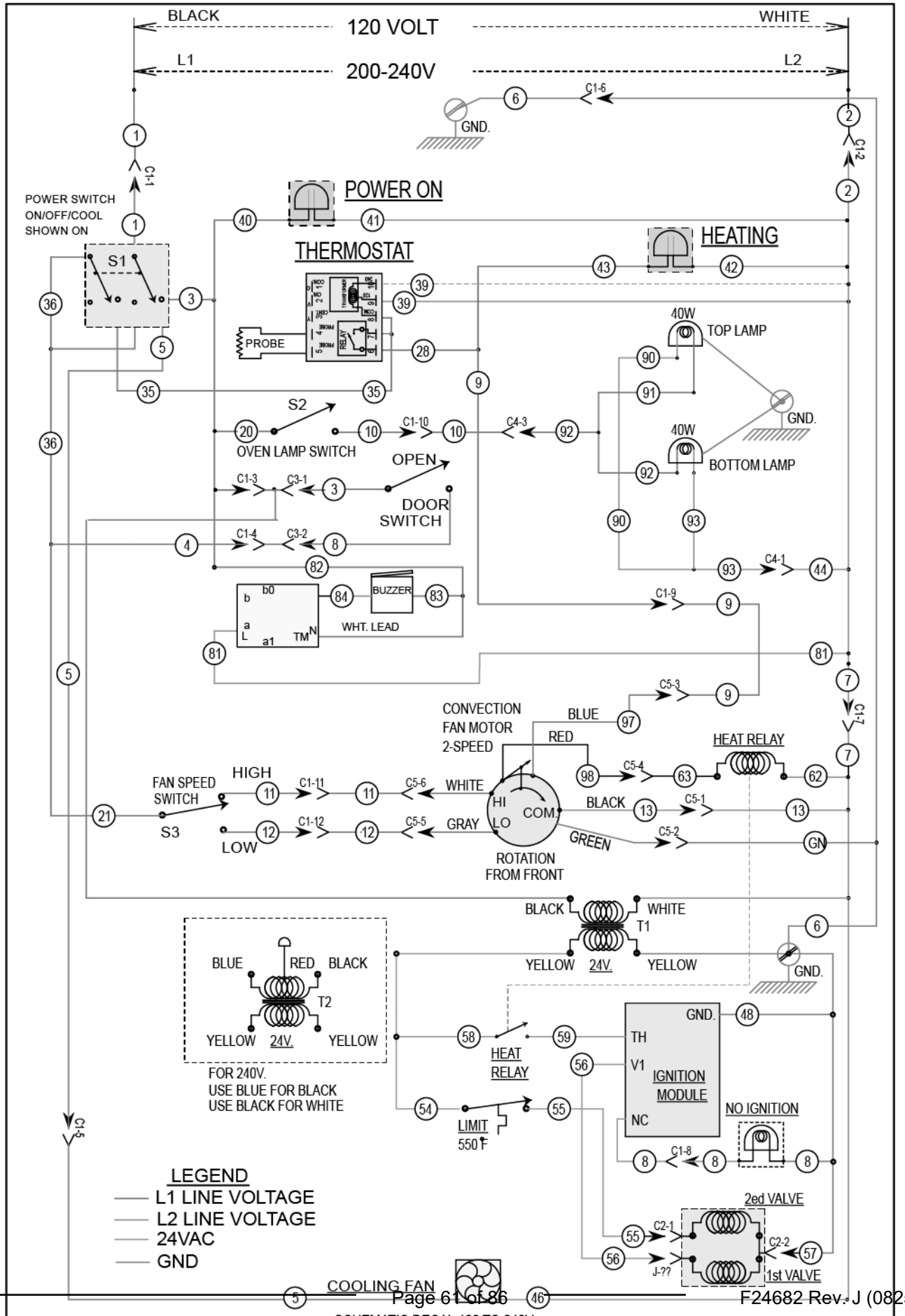

SCHEMATIC DECAL 120 TO 240V.

424199-1
REV F

VC4 & 6GD GAS CONVECTION OVEN SOLID STATE CONTROL

STARTING SERIAL NUMBER 482080151

AI5735

VC4GD, VC6GD Solid State Temperature Control, Roast & Hold Option

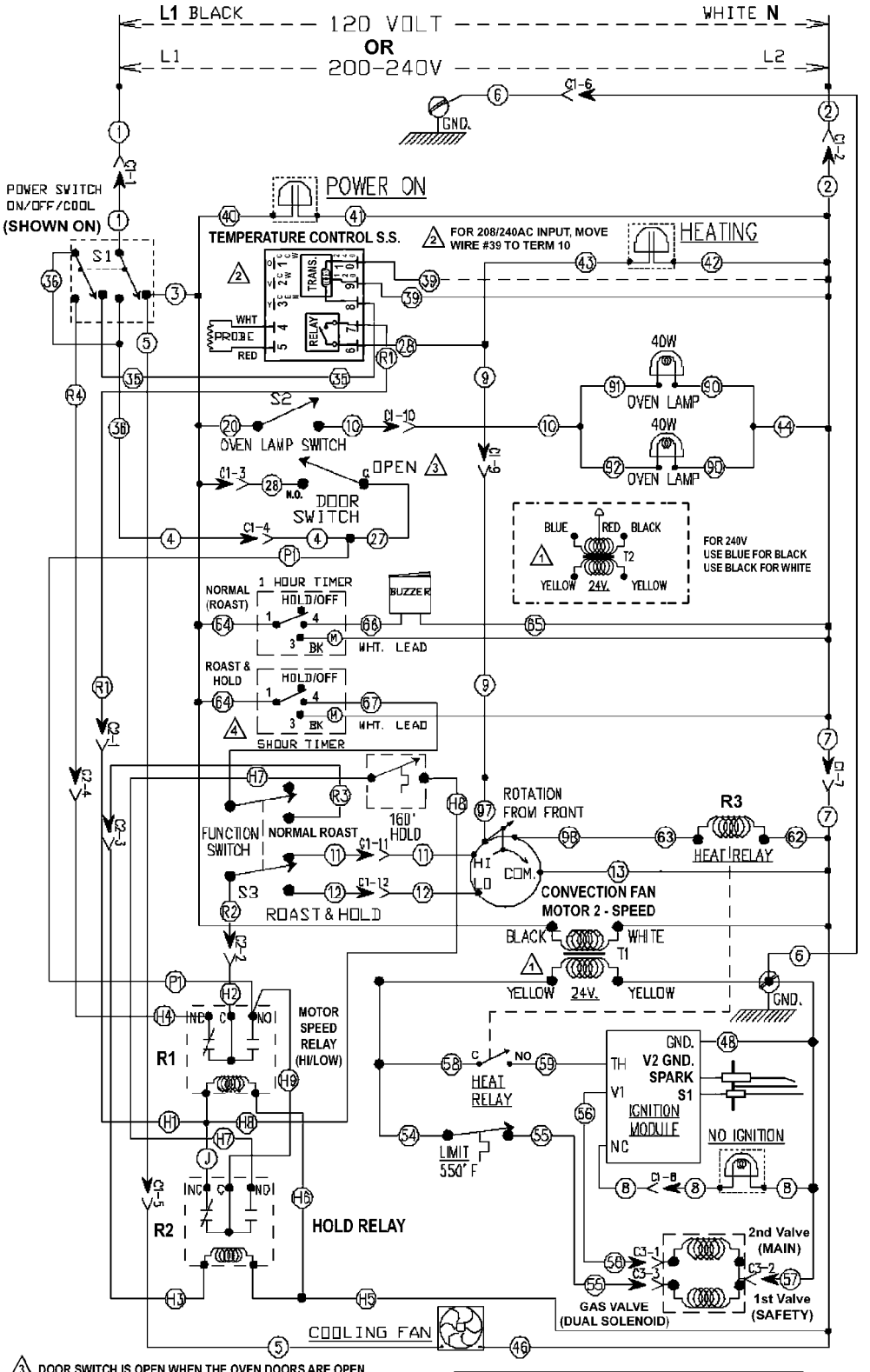

VC4GC, VC6GC Computer Control (Roast & Hold Standard)

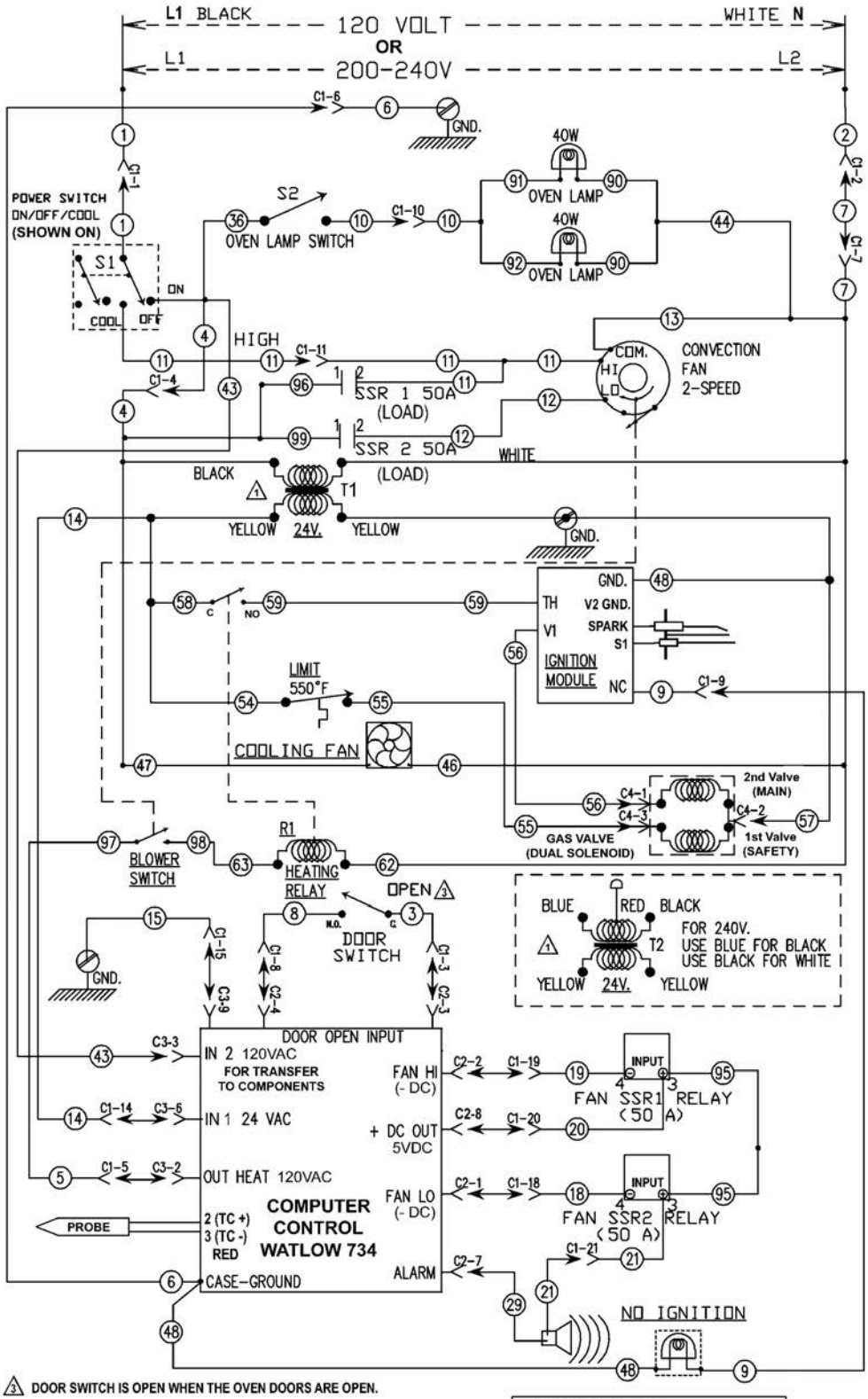

3 DOOR SWITCH IS OPEN WHEN THE OVEN DOORS ARE OPEN.

DERIVED FROM 424828-1 REV D
SEE WIRING DIA 424827-1 (10438, 10439)

VC4GC, VC6GC
GAS CONVECTION OVEN
COMPUTER CONTROL

10437

UP TO SERIAL NUMBER 481907145

VC4 & 6GD-HGC-WKGC Convection Oven Single Burner W/C 3700 - 120-240V - 00-959177C - AI4898 - STARTING SERIAL NUMBER 481907146 (PDF Link)

- VC4 & 6GD-HGC-WKGC Convection Oven Single Burner wc 3700 - 120-240V - 00-959177C - AI4898

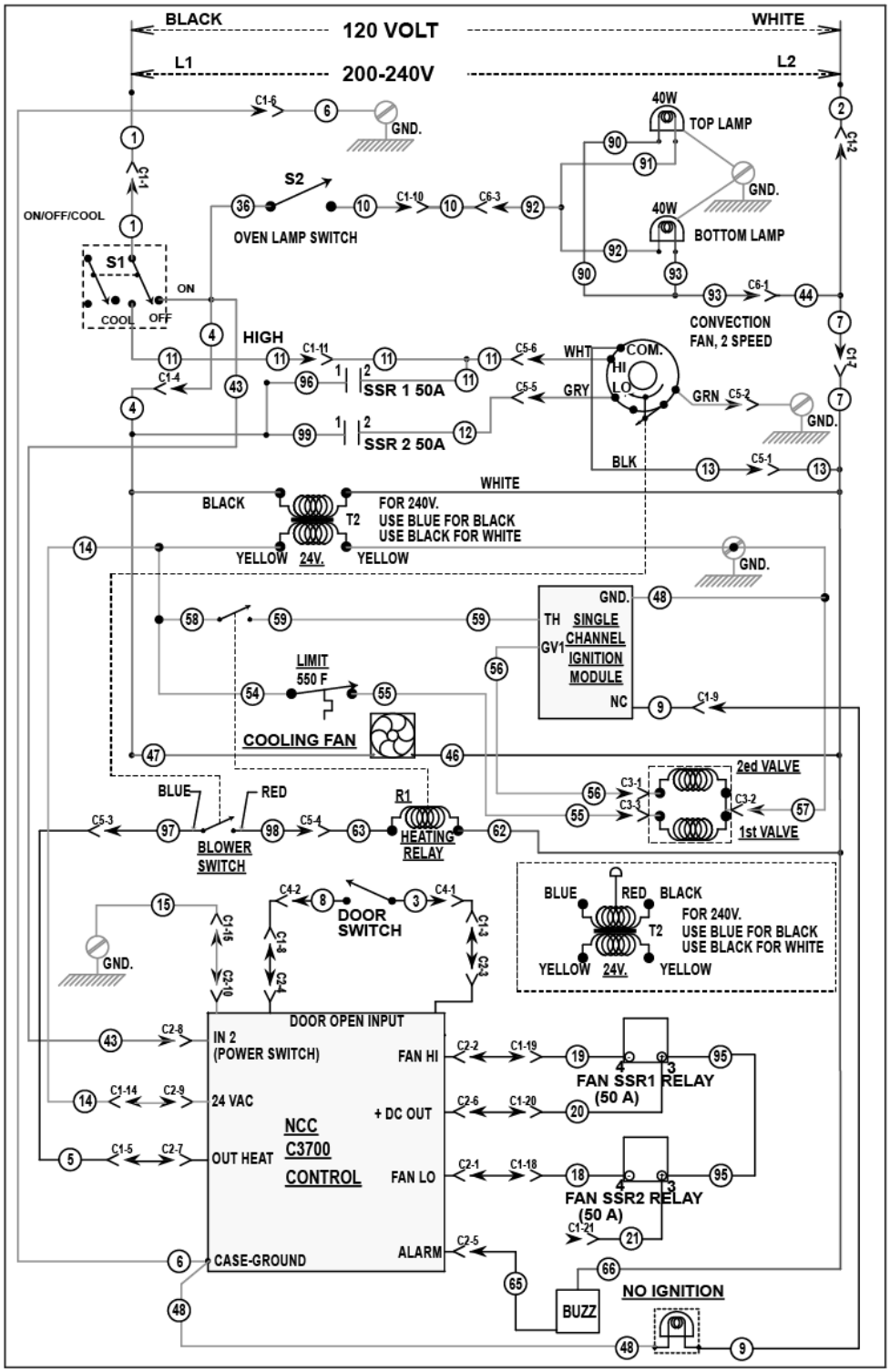

LEGEND
L1 LINE VOLTAGE
L2 LINE VOLTAGE
24VAC
GND

AI4898

VC4 & 6GC / HGC / HEC / WKGC CONVECTION OVENS SINGLE BURNER W/C 3700 120 TO 240V.

DERIVED FROM 959177 Rev C

STARTING SERIAL NUMBER 481907146

STARTING AT SERIAL NUMBER 481907146

VC4GD & VC6GD, VC With Standing Pilot 120 & 200 VOLT

VC4GD & VC6GD with Standing Pilot - 120-240V - 00-499814-Y4 Rev D - AI5119 (PDF Link)

VC4GD & VC6GD w Standing Pilot - 120-240V - 00-499814-Y4 Rev D - AI5119

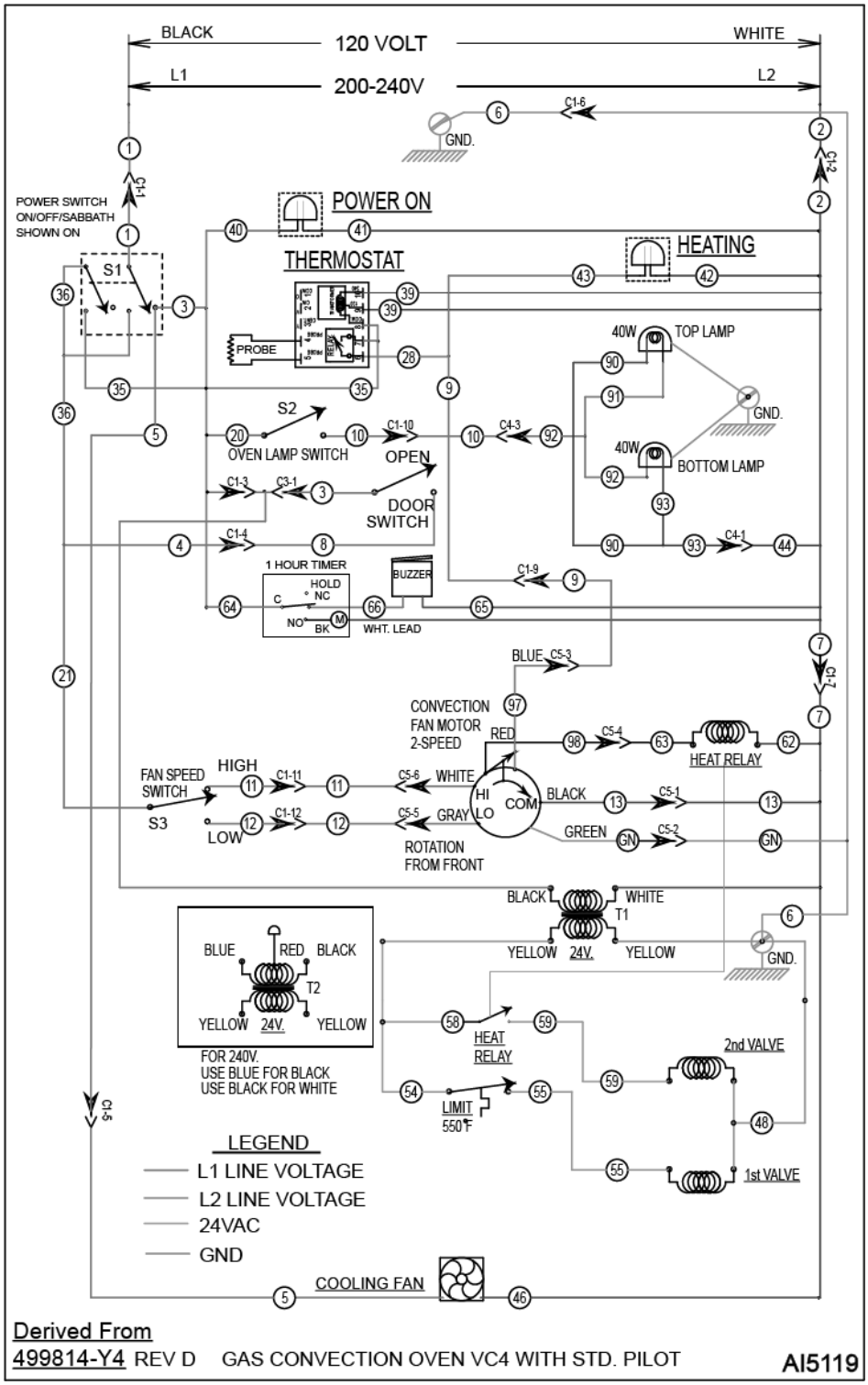

VC WITH STANDING PILOT VC4GD & VC6GD 120 & 200 VOLT

WIRING DIAGRAMS

VC4GS, VC6GS Mechanical (KX) Controls

REQ.	IT.	DESCRIPTION		FIN.
18	AB	WIRE NUT BLUE		-
-	AA	WIRE NUT YELLOW		-
1	X	WIRE, SPARK IGNIT. 36"		-
1	W	CORD SET 120V. UNITS ONLY		-
1	V	FAN, COOLING	120 VOLT	
			200 -240 V.	
1	U	COMBINATION VALVE	NAT. GAS	
			L.P. GAS	
1	T	CONTROL, SPARK IGNITION		-
1	S	LIMIT CONTROL 550F		-
1	R	RELAY, HEATING (DPDT)	120 VOLT	
			200 -240 V.	
1	P	TRANSFORMER 24V. OUT	120 VOLT	
			200 -240 V.	
2	N	LAMP ASSEMBLY	120 VOLT	
			200 -240 V.	
1	M	MOTOR 2 SPEED G.E.	120 VOLT	
			200 -240 V.	
2	L	BLOCK,PORCELAIN ASSEMBLY		-
1	K	SWITCH, LIMIT (DOOR)		-
2	J	SWITCH, TOGGLE D.P.D.T		-
1	H	TIMER - 1 HOUR	120 VOLT	
			200-240V. 60HZ	
			200-240V. 50HZ	
1	G	BUZZER	120 VOLT	
			200 -240 V.	
1	E	LIGHT,INDICATOR RED 250V		-
1	D	THERMOSTAT KX		-
1	C	LIGHT,INDICATOR "NO IGNITION" 28V.		-
1	B	LIGHT "HEAT"POWER ON"	120 VOLT	
			200 -240 V.	
1	A	SWITCH, TOGGLE D.P.D.T CENT.OFF		-

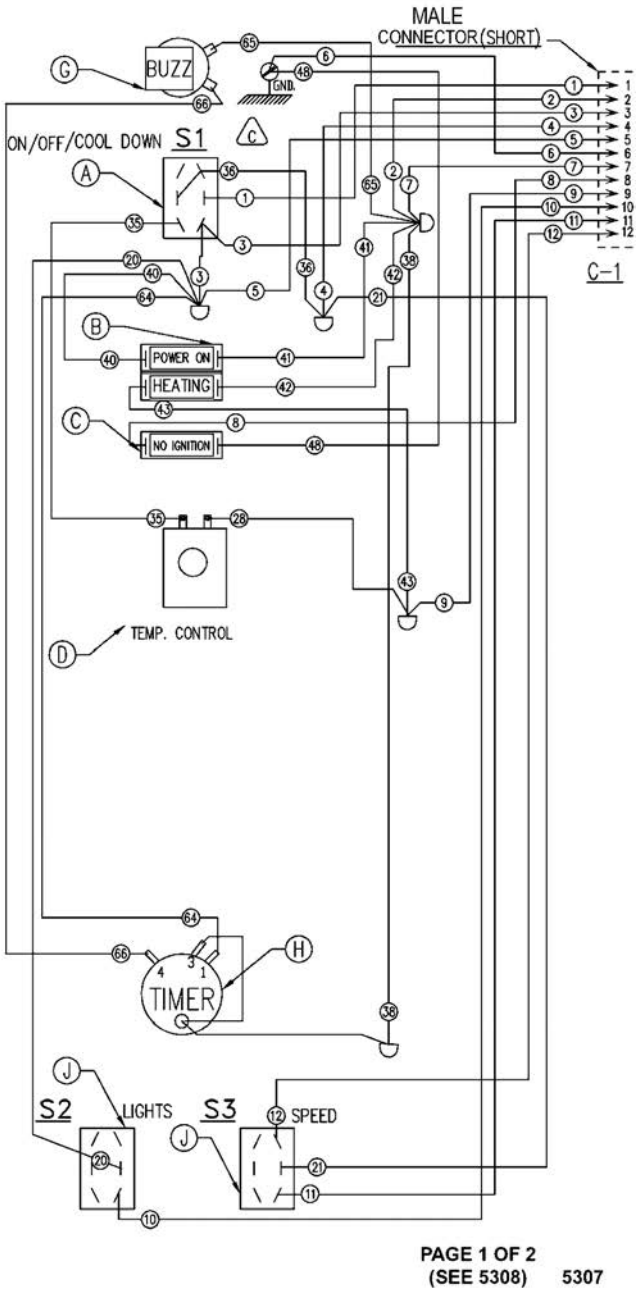

Fig. 107

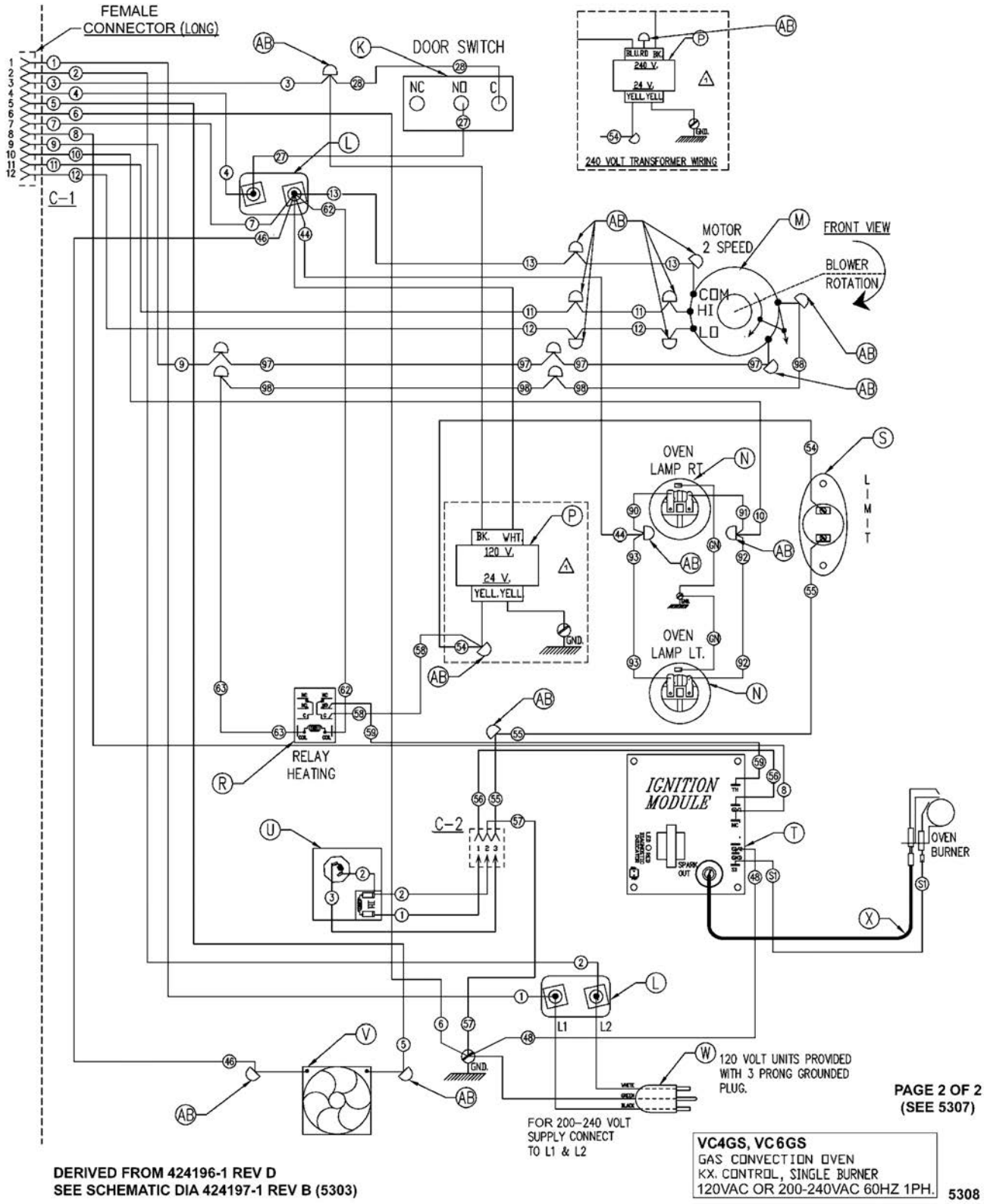
FEMALE
CONNECTOR (LONG)
C-1
DOOR SWITCH
NC
NO
C
240 VOLT TRANSFORMER WIRING
MOTOR
2 SPEED
COM
HI
LO
FRONT VIEW
BLOWER
ROTATION
OVEN
LAMP RT.
OVEN
LAMP LT.
LIMIT
BK. WHT.
120 V.
24 V.
YELL. YELL.
GND.
RELAY
HEATING
C-2
IGNITION
MODULE
SPARK
OUT
OVEN
BURNER
L1
L2
120 VOLT UNITS PROVIDED
WITH 3 PRONG GROUNDED
PLUG.
PAGE 2 OF 2
(SEE 5307)
FOR 200-240 VOLT
SUPPLY CONNECT
TO L1 & L2
VC4GS, VC6GS
GAS CONVECTION OVEN
KX. CONTROL, SINGLE BURNER
120VAC OR 200-240VAC 60HZ 1PH.
5308
DERIVED FROM 424196-1 REV D
SEE SCHEMATIC DIA 424197-1 REV B (5303)

Fig. 108

VC4GS, VC6GS Mechanical (KX) Controls, Roast & Hold Option

REQ.	IT.	DESCRIPTION		FIN.
2	AC	RELAY, SPDT (1) - R1 MOTOR (HI/LOW) (1) - R2 HOLD	120 VOLT 200 -240 V.	
18	AB	WIRE NUT		-
-	AA	WIRE NUT YELLOW		-
1	X	WIRE, SPARK IGNIT. 36"		-
1	W	CORD SET 120V. UNITS ONLY		-
1	V	FAN, COOLING	120 VOLT 200 -240 V.	
1	U	COMBINATION VALVE	NAT. GAS L.P. GAS	
1	T	CONTROL, SPARK IGNITION		-
1	S	LIMIT CONTROL 550F		-
2	R	RELAY, DPDT (R3 & R4)	120 VOLT 200 -240 V.	
1	P	TRANSFORMER 24V. OUT	120 VOLT 200 -240 V.	
2	N	LAMP ASSEMBLY	120 VOLT 200 -240 V.	
1	M	MOTOR 2 SPEED G.E.	120 VOLT 200 -240 V.	
2	L	BLOCK,PORCELAIN ASSEMBLY		-
1	K	SWITCH, LIMIT (DOOR)		-
2	J	SWITCH, TOGGLE S.P.D.T		-
1	H1	TIMER - 5 HOUR	120 VOLT 200-240V. 60HZ 200-240V. 50HZ	
1	H	TIMER - 1 HOUR	120 VOLT 200-240V. 60HZ 200-240V. 50HZ	
1	G	BUZZER	120 VOLT 200 -240 V.	
1	F	THERMOSTAT 160 F (HOLD)		-
1	E	LIGHT,INDICATOR RED 250V		-
1	D	THERMOSTAT KX		-
1	C	LIGHT,INDICATOR "NO IGNITION" 28V.		-
1	B	LIGHT "HEAT"POWER ON"	120 VOLT 200 -240 V.	
1	A	SWITCH, TOGGLE D.P.D.T CENT.OFF		-

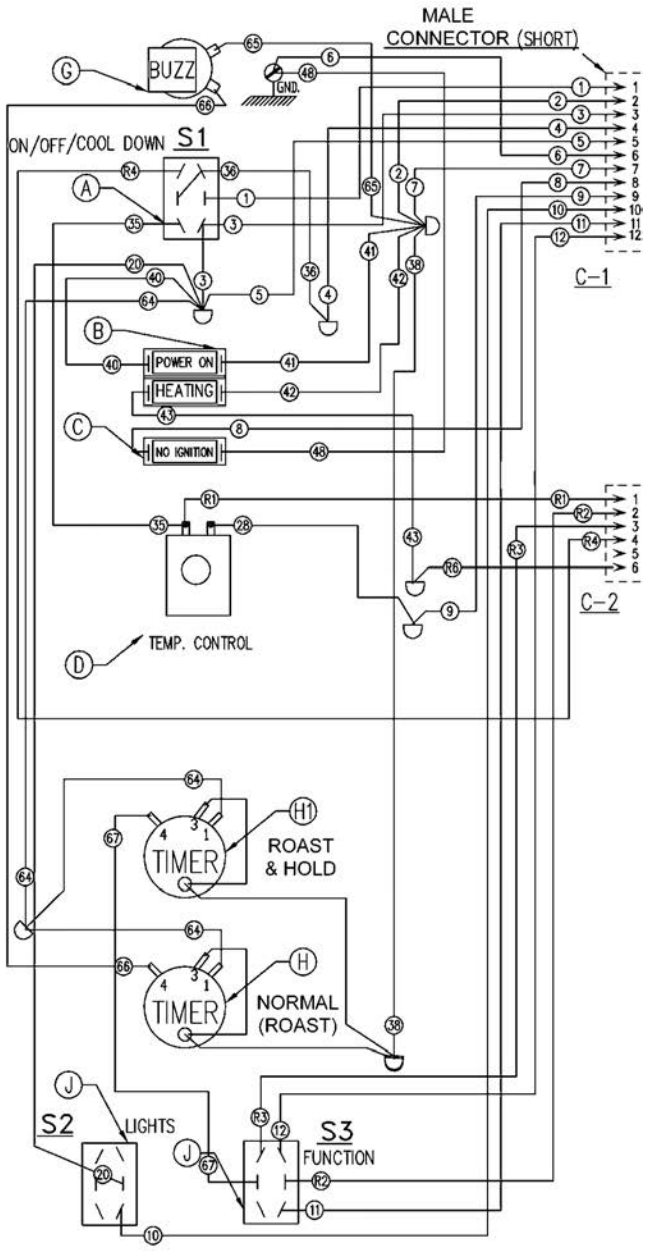

PAGE 1 OF 2
(SEE 5310) 5309

Fig. 109

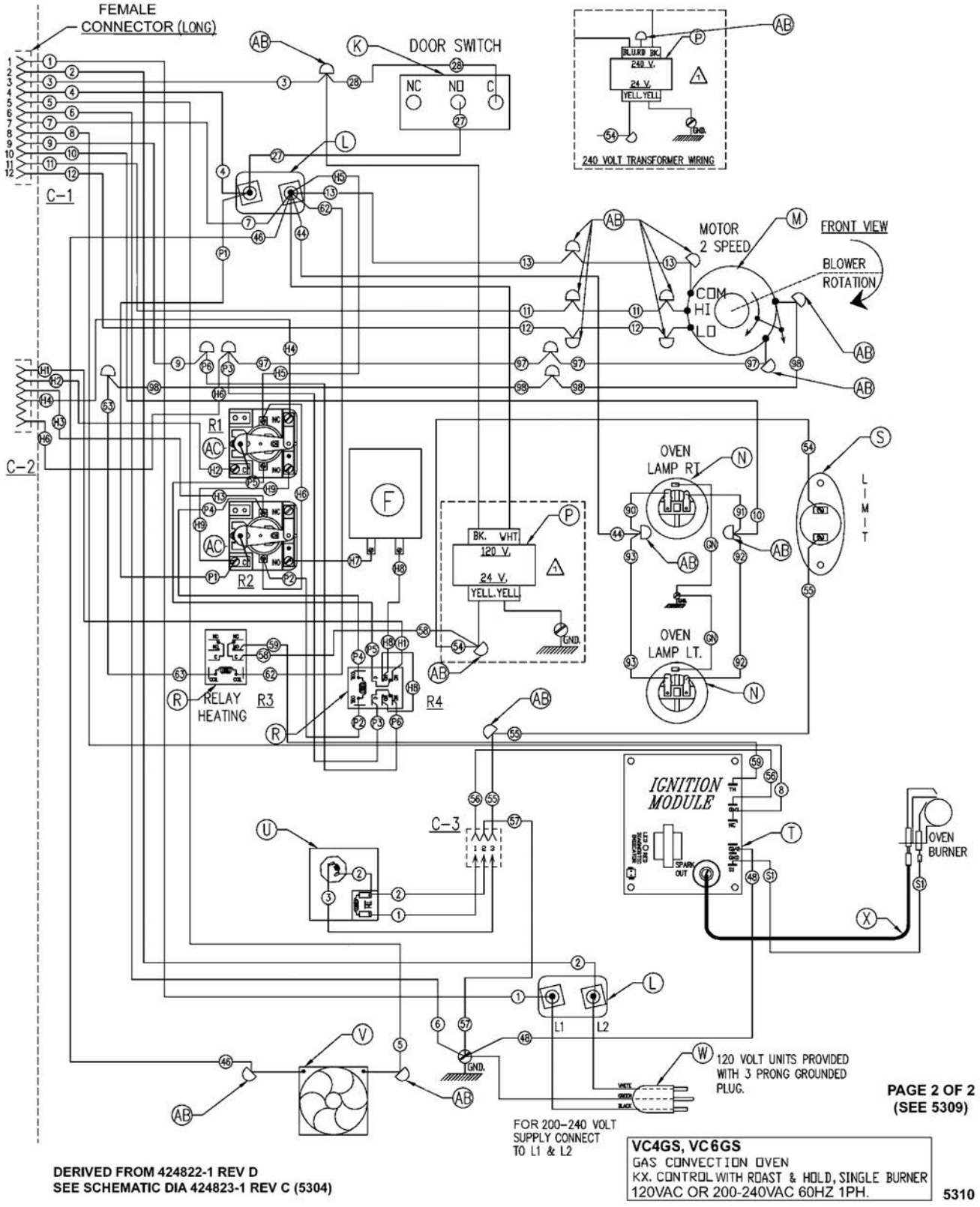
FEMALE
CONNECTOR (LONG)
DOOR SWITCH
NC
NO
C
240 VOLT TRANSFORMER WIRING
BLU.RD
BK.
240 V.
24 V.
YELL.YELL
GND.
C-1
C-2
C-3
MOTOR
2 SPEED
FRONT VIEW
BLOWER
ROTATION
COM
HI
LO
R1
R2
R3
R4
RELAY
HEATING
OVEN
LAMP RT.
OVEN
LAMP LT.
LIMIT
BK. WHT
120 V.
24 V.
YELL.YELL
IGNITION
MODULE
SPARK
OUT
OVEN
BURNER
L1
L2
120 VOLT UNITS PROVIDED
WITH 3 PRONG GROUNDED
PLUG.
WHITE
GREEN
BLACK
FOR 200-240 VOLT
SUPPLY CONNECT
TO L1 & L2
PAGE 2 OF 2
(SEE 5309)
DERIVED FROM 424822-1 REV D
SEE SCHEMATIC DIA 424823-1 REV C (5304)
VC4GS, VC6GS
GAS CONVECTION OVEN
KX. CONTROL WITH ROAST & HOLD, SINGLE BURNER
120VAC OR 200-240VAC 60HZ 1PH.
5310

Fig. 110

VC4GD, VC6GD Solid State Temperature Control

REQ.	IT.	DESCRIPTION		PIN.
18	AB	WIRE NUT BLUE		-
-	AA	WIRE NUT YELLOW		-
1	Z	PROBE, THERMISTOR		-
1	X	WIRE, SPARK IGNIT. 36'		-
1	W	CORD SET 120V. UNITS ONLY		-
1	V	FAN, COOLING	120 VOLT	
			200 -240 V.	
1	U	COMBINATION VALVE	NAT. GAS	
			L.P. GAS	
1	T	CONTROL, SPARK IGNITION		-
1	S	LIMIT CONTROL 550F		-
1	R	RELAY, HEATING (DPDT)	120 VOLT	
			200 -240 V.	
1	P	TRANSFORMER 24V. OUT	120 VOLT	
			200 -240 V.	
2	N	LAMP ASSEMBLY	120 VOLT	
			200 -240 V.	
1	M	MOTOR 2 SPEED G.E.	120 VOLT	
			200 -240 V.	
2	L	BLOCK,PORCELAIN ASSEMBLY		-
1	K	SWITCH, LIMIT (DOOR)		-
2	J	SWITCH, TOGGLE D.P.D.T		-
1	H	TIMER - 1 HOUR	120 VOLT	
			200-240V. 60HZ	
			200-240V. 50HZ	
1	G	BUZZER	120 VOLT	
			200 -240 V.	
1	E	LIGHT,INDICATOR RED 250V		-
1	D	TEMPERATURE CONTROL S.S. G-5		-
1	C	LIGHT,INDICATOR 'NO IGNITION' 28V.		-
1	B	LIGHT 'HEAT''POWER ON'	120 VOLT	
			200 -240 V.	
1	A	SWITCH, TOGGLE D.P.D.T CENT.OFF		-

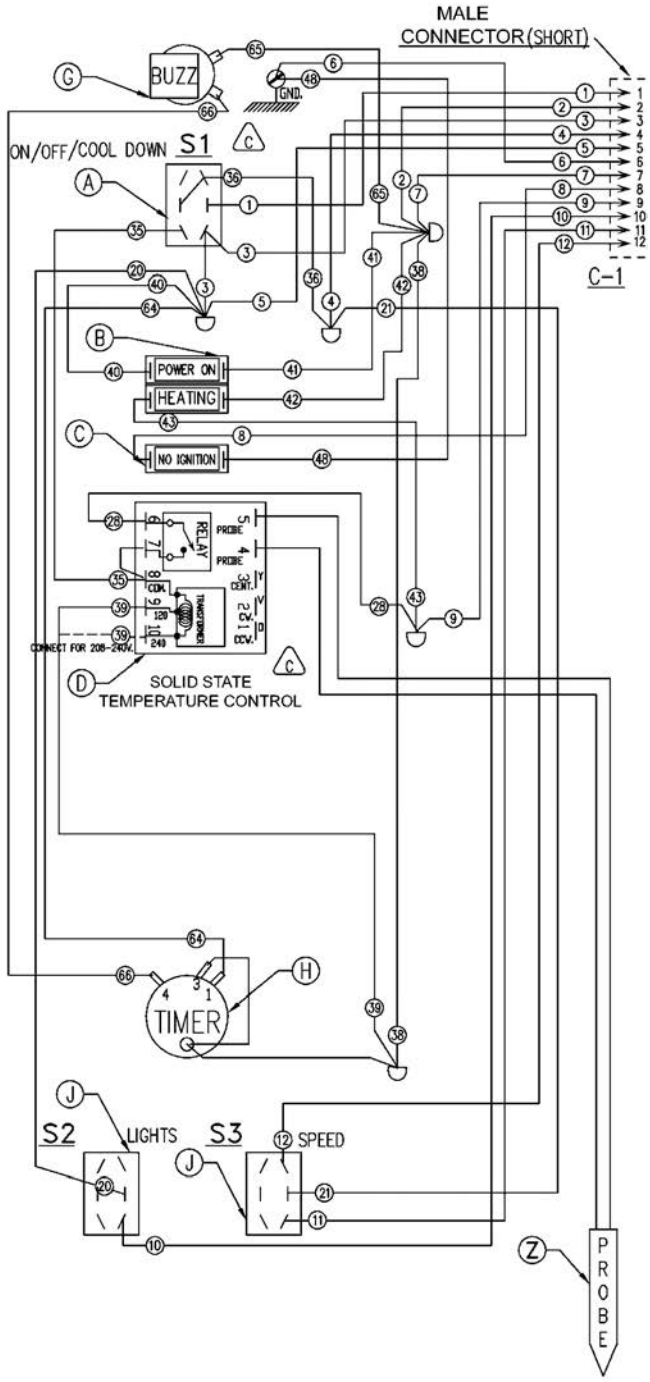

PAGE 1 OF 2
(SEE 5312) 5311

Fig. 111

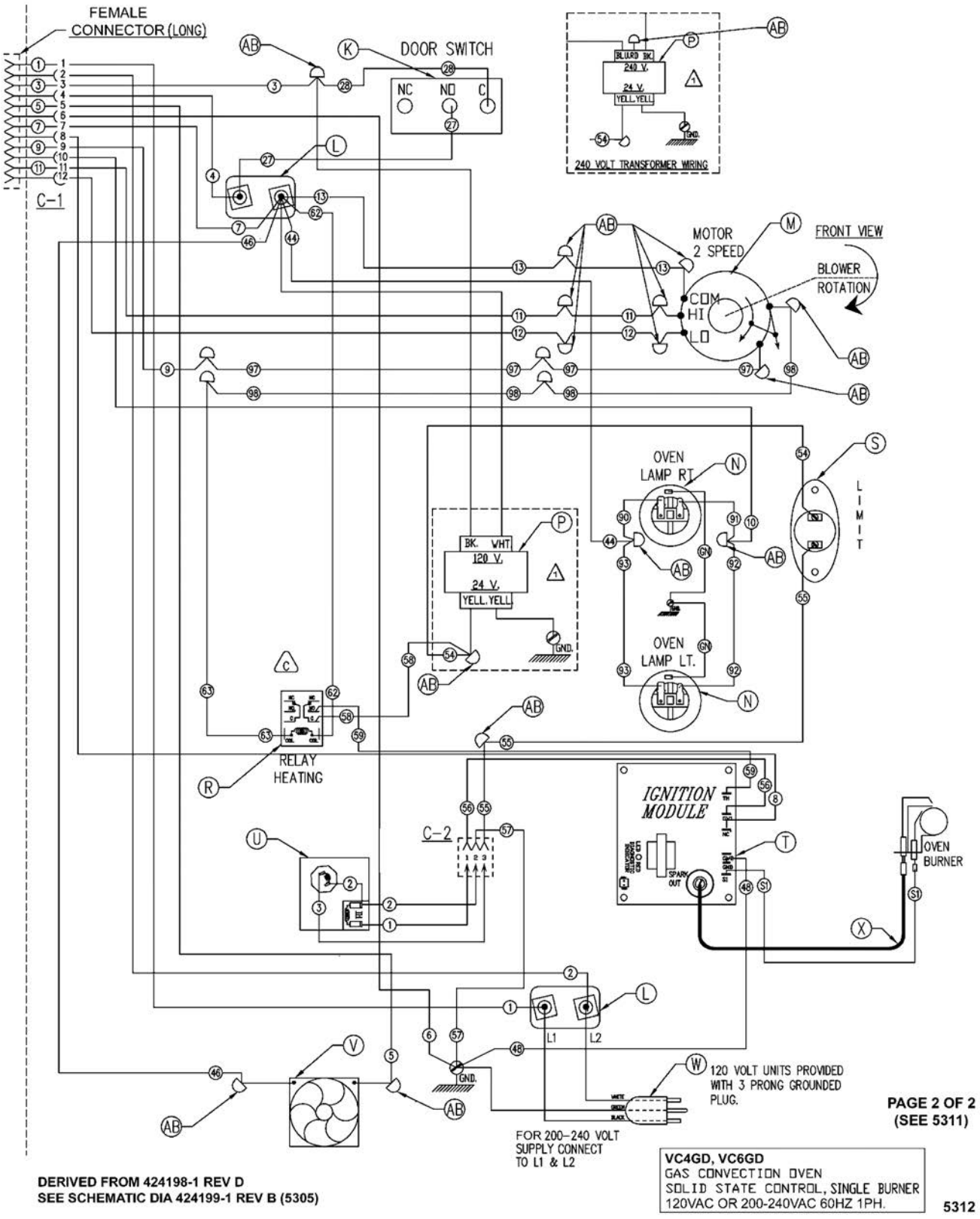
FEMALE CONNECTOR (LONG)
C-1
DOOR SWITCH
NC
NO
C
240 VOLT TRANSFORMER WIRING
MOTOR 2 SPEED
COM
HI
LO
FRONT VIEW
BLOWER ROTATION
OVEN LAMP RT
OVEN LAMP LT.
LIMIT
BK. WHT
120 V.
24 V.
YELL. YELL.
GND.
RELAY HEATING
C-2
IGNITION MODULE
SPARK OUT
OVEN BURNER
L1
L2
120 VOLT UNITS PROVIDED WITH 3 PRONG GROUNDED PLUG.
FOR 200-240 VOLT SUPPLY CONNECT TO L1 & L2
PAGE 2 OF 2
(SEE 5311)
VC4GD, VC6GD
GAS CONVECTION OVEN
SOLID STATE CONTROL, SINGLE BURNER
120VAC OR 200-240VAC 60HZ 1PH.
5312
DERIVED FROM 424198-1 REV D
SEE SCHEMATIC DIA 424199-1 REV B (5305)

Fig. 112

VC4GD & V6GD Single Burner with Solid State Control - 120-200V - 00-424198 (PDF Link) Starting Serial Number 48190746

VC4GD-VC6GD Single Burner - 120-200V - 00-424198 - AI4888

STARTING AT SERIAL NUMBER 481907146

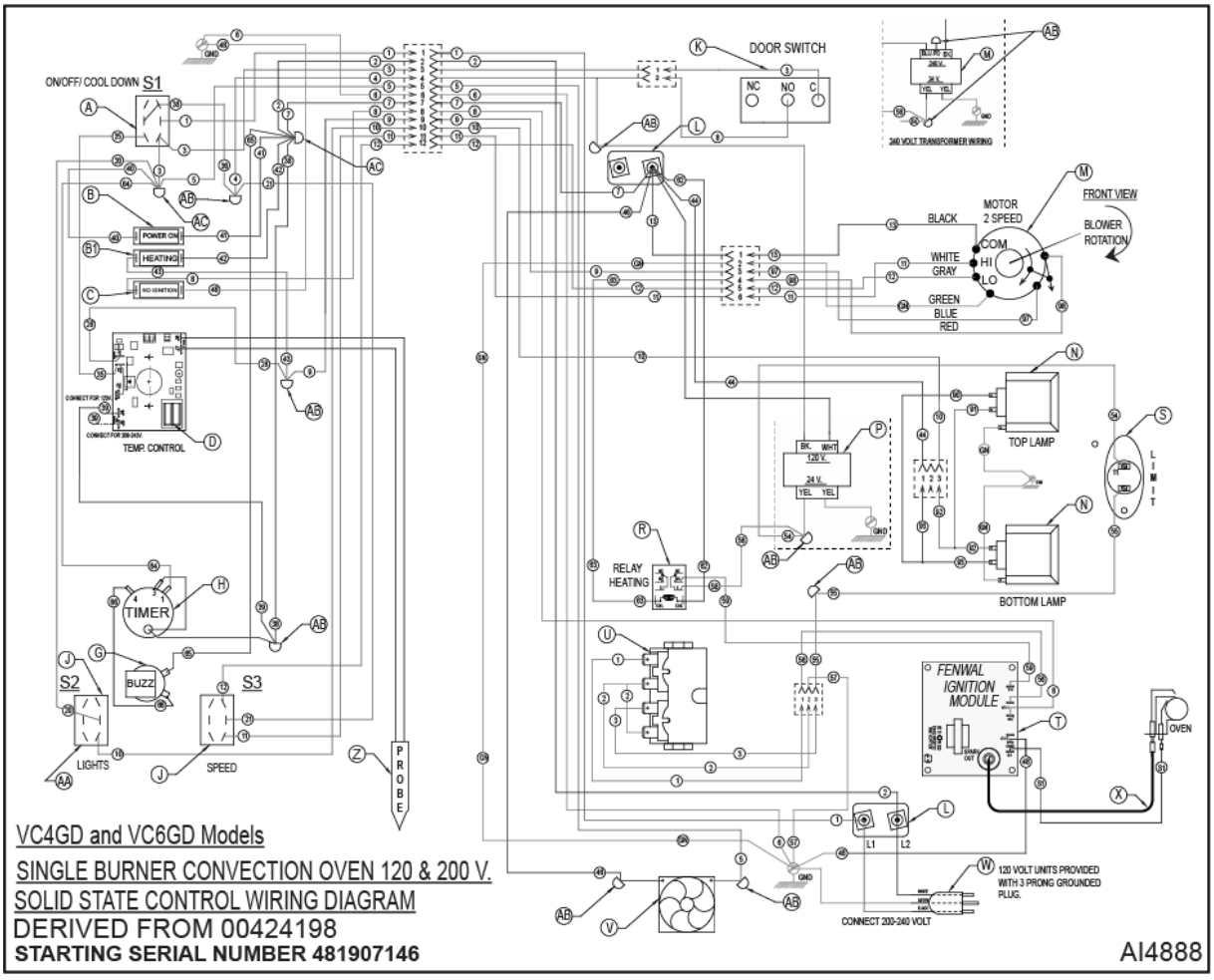

Fig. 113

VC4GD & V6GD Single Burner Solid State Control - 00-424198W1 - AI5635 Starting Serial Number 482080151 (PDF Link)

Single Burner Convection Oven - 120-200VAC - 50 & 60Hz - 1PH - 00-424198W - AI5635

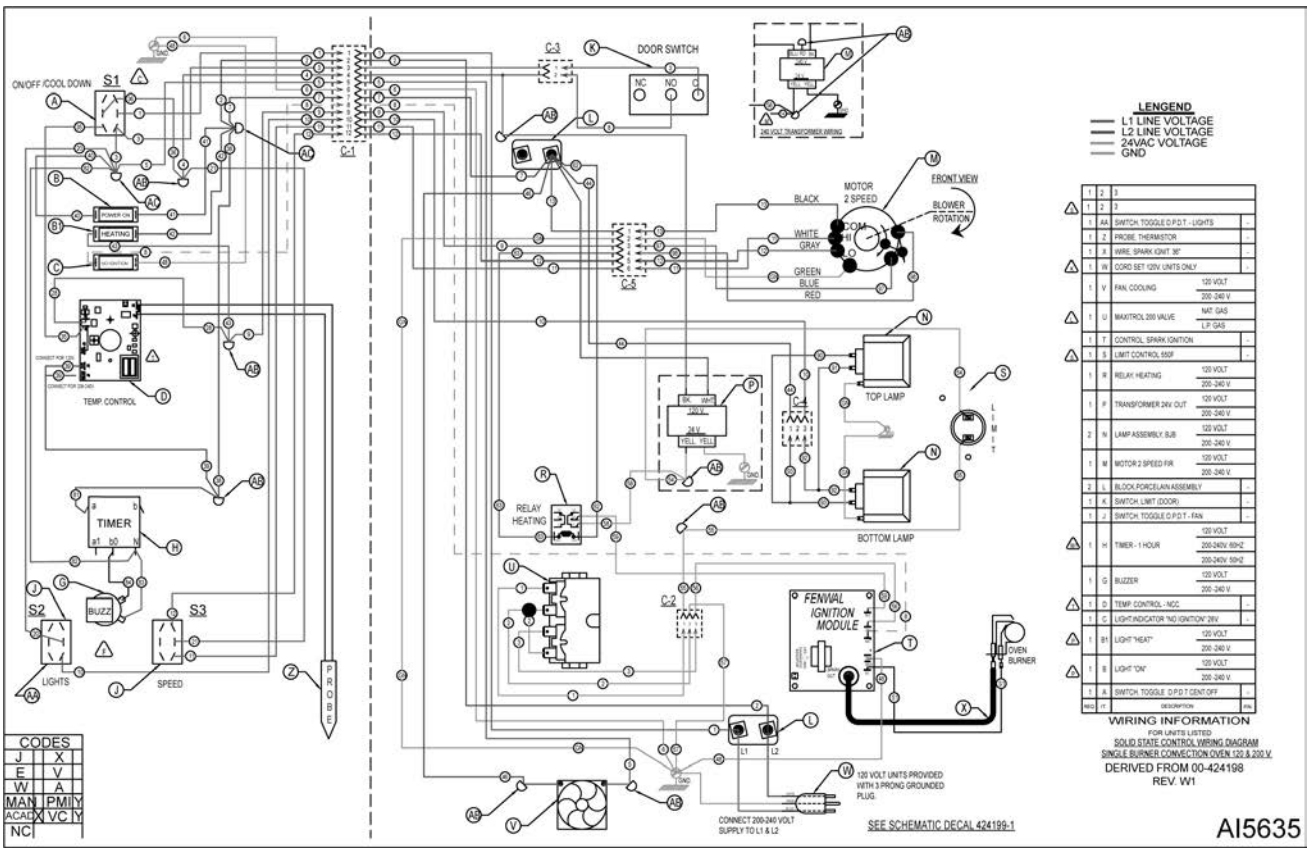

Fig. 114

VC4GD, VC6GD Solid State Temperature Control, Roast & Hold Option

REQ.	IT.	DESCRIPTION		PIN.
2	AC	RELAY, S.P.D.T. (1) - R1 MOTOR (HI/LOW) (1) - R2 HOLD	120 VOLT 200 -240 V.	
18	AB	WIRE NUT		-
-	AA	WIRE NUT YELLOW		-
1	Z	PROBE, THERMISTOR		-
1	X	WIRE, SPARK IGNIT. 36"		-
1	W	CORD SET 120V. UNITS ONLY		-
1	V	FAN, COOLING	120 VOLT 200 -240 V.	
1	U	COMBINATION VALVE	NAT. GAS L.P. GAS	
1	T	CONTROL, SPARK IGNITION		-
1	S	LIMIT CONTROL 550F		-
1	R	RELAY, HEATING, DPDT	120 VOLT 200 -240 V.	
1	P	TRANSFORMER 24V. OUT	120 VOLT 200 -240 V.	
2	N	LAMP ASSEMBLY	120 VOLT 200 -240 V.	
1	M	MOTOR 2 SPEED G.E.	120 VOLT 200 -240 V.	
2	L	BLOCK,PORCELAIN ASSEMBLY		-
1	K	SWITCH, LIMIT (DOOR)		-
2	J	SWITCH, TOGGLE D.P.D.T		-
1	H1	TIMER - 5 HOUR	120 VOLT 200-240V. 60HZ 200-240V. 50HZ	
1	H	TIMER - 1 HOUR	120 VOLT 200-240V. 60HZ 200-240V. 50HZ	
1	G	BUZZER	120 VOLT 200 -240 V.	
1	F	THERMOSTAT, HOLD 160 F.		-
1	E	LIGHT,INDICATOR RED 250V		-
1	D	TEMPERATURE CONTROL S.S. G-5		-
1	C	LIGHT,INDICATOR "NO IGNITION" 28V.		-
1	B	LIGHT "HEAT"/"POWER ON"	120 VOLT 200 -240 V.	
1	A	SWITCH, TOGGLE D.P.D.T CENT.OFF		-

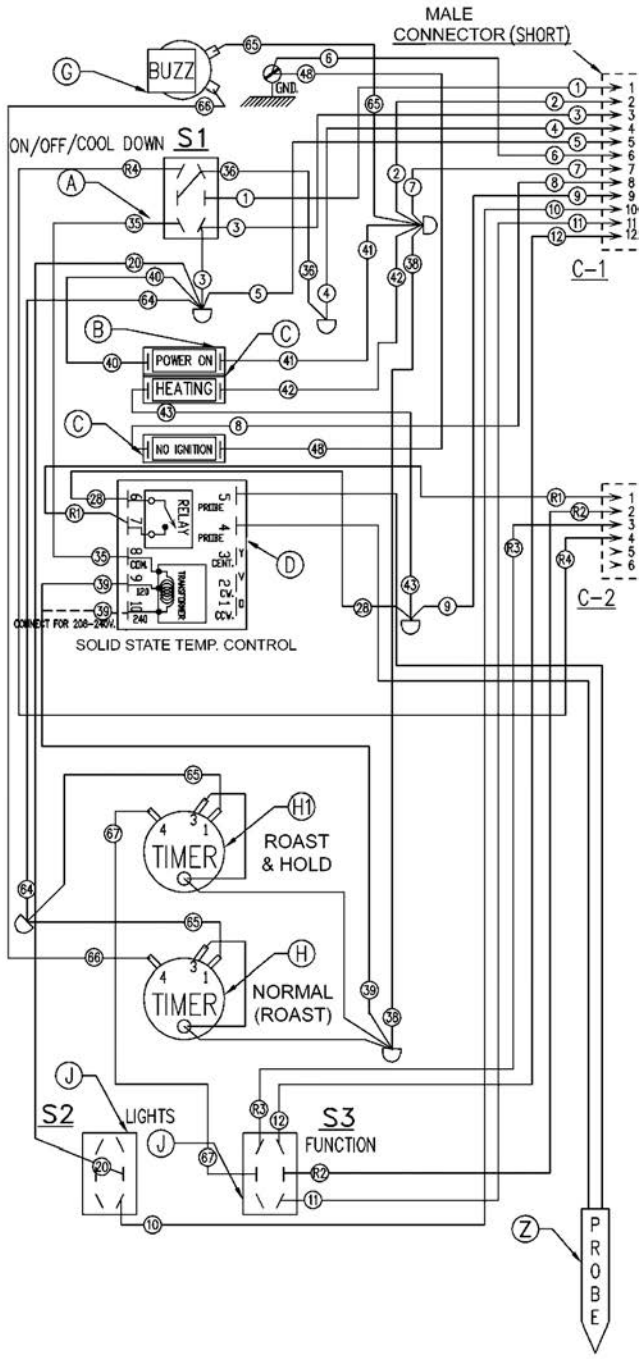

PAGE 1 OF 2
(SEE 5314) 5313

Fig. 115

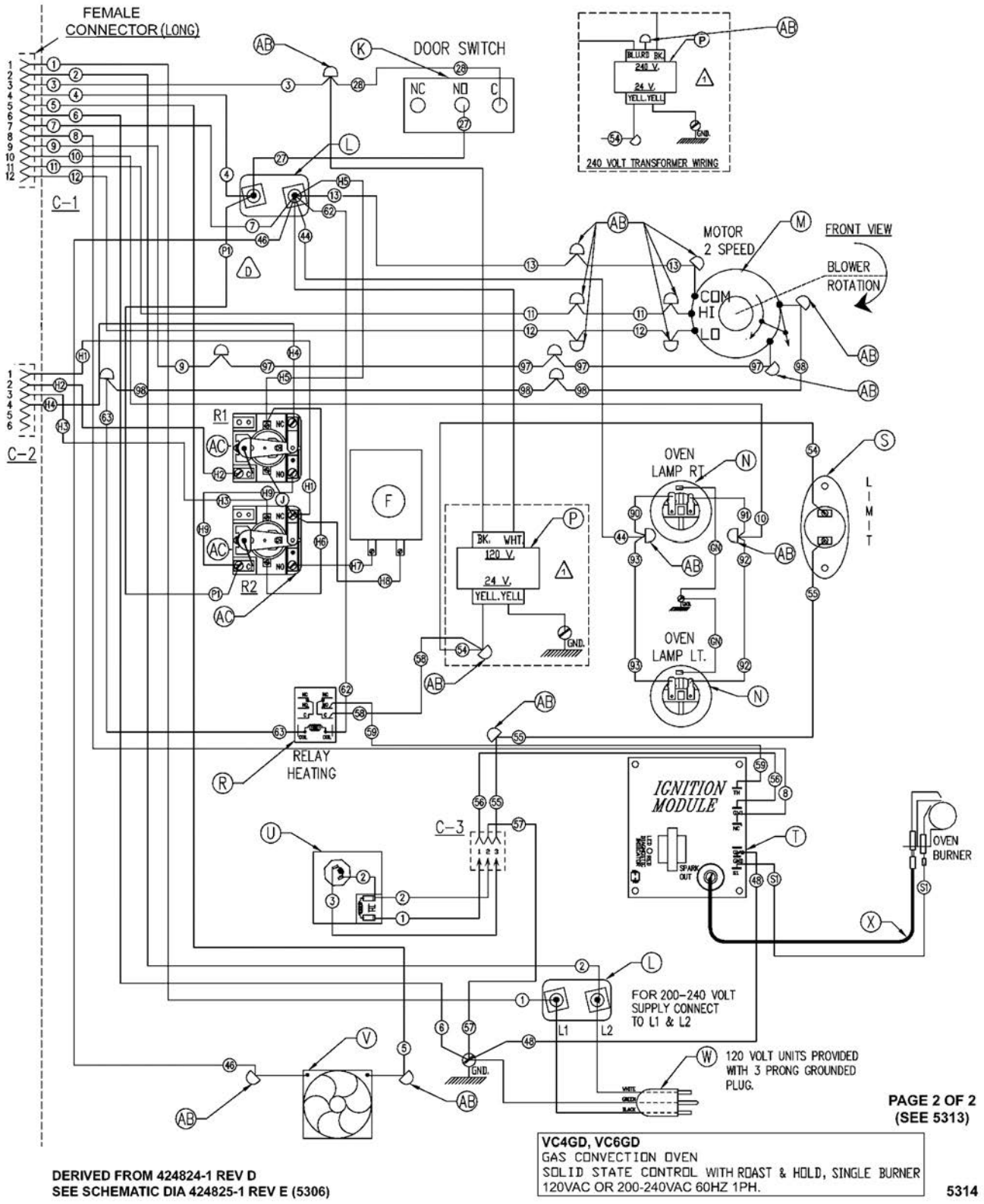
FEMALE CONNECTOR (LONG)
DOOR SWITCH
NC
NO
C
240 VOLT TRANSFORMER WIRING
MOTOR 2 SPEED
FRONT VIEW
BLOWER ROTATION
COM
HI
LO
C-1
C-2
C-3
R1
R2
OVEN LAMP RT.
OVEN LAMP LT.
LIMIT
RELAY HEATING
IGNITION MODULE
OVEN BURNER
FOR 200-240 VOLT SUPPLY CONNECT TO L1 & L2
L1
L2
120 VOLT UNITS PROVIDED WITH 3 PRONG GROUNDED PLUG.
PAGE 2 OF 2 (SEE 5313)
VC4GD, VC6GD
GAS CONVECTION OVEN
SOLID STATE CONTROL WITH ROAST & HOLD, SINGLE BURNER
120VAC OR 200-240VAC 60HZ 1PH.
5314
DERIVED FROM 424824-1 REV D
SEE SCHEMATIC DIA 424825-1 REV E (5306)

Fig. 116

VC4GC, VC6GC Computer Control (Roast & Hold Standard)

REQ.	IT.	DESCRIPTION	
18	AB	WIRE NUT BLUE	
-	AA	WIRE NUT YELLOW	
1	X	WIRE, SPARK IGNIT. 40"	
1	W	CORD SET 120V. UNITS ONLY	
1	V	FAN, COOLING	120 VOLT 200 -240 V
1	U	COMBINATION VALVE	NAT. GAS L.P. GAS
1	T	CONTROL, SPARK IGNITION	
1	S	LIMIT CONTROL 550F	
1	R	RELAY, HEATING (DPDT)	120 VOLT 200 -240 V
1	P	TRANSFORMER 24V. OUT	120 VOLT 200 -240 V
2	N	LAMP ASSEMBLY	120 VOLT 200 -240 V
1	M	MOTOR 2 SPEED G.E.	120 VOLT 200 -240 V
2	L	BLOCK,PORCELAIN ASSEMBLY	
1	K	SWITCH, LIMIT (DOOR)	
1	G	ALARM, 12V. DC. EXTERNAL	
2	F	RELAY, SOLID STATE 50A.	
1	E	LIGHT,INDICATOR RED 250V	
1	D1	THERMOCOUPLE PROBE	
1	D	CONTROLLER WATLOW 734	
1	C	LIGHT,INDICATOR "NO IGNITION" 28V.	
1	B	SWITCH, OVEN LIGHT	
1	A	SWITCH, MAIN POWER D.P.D.T CENT.OF	

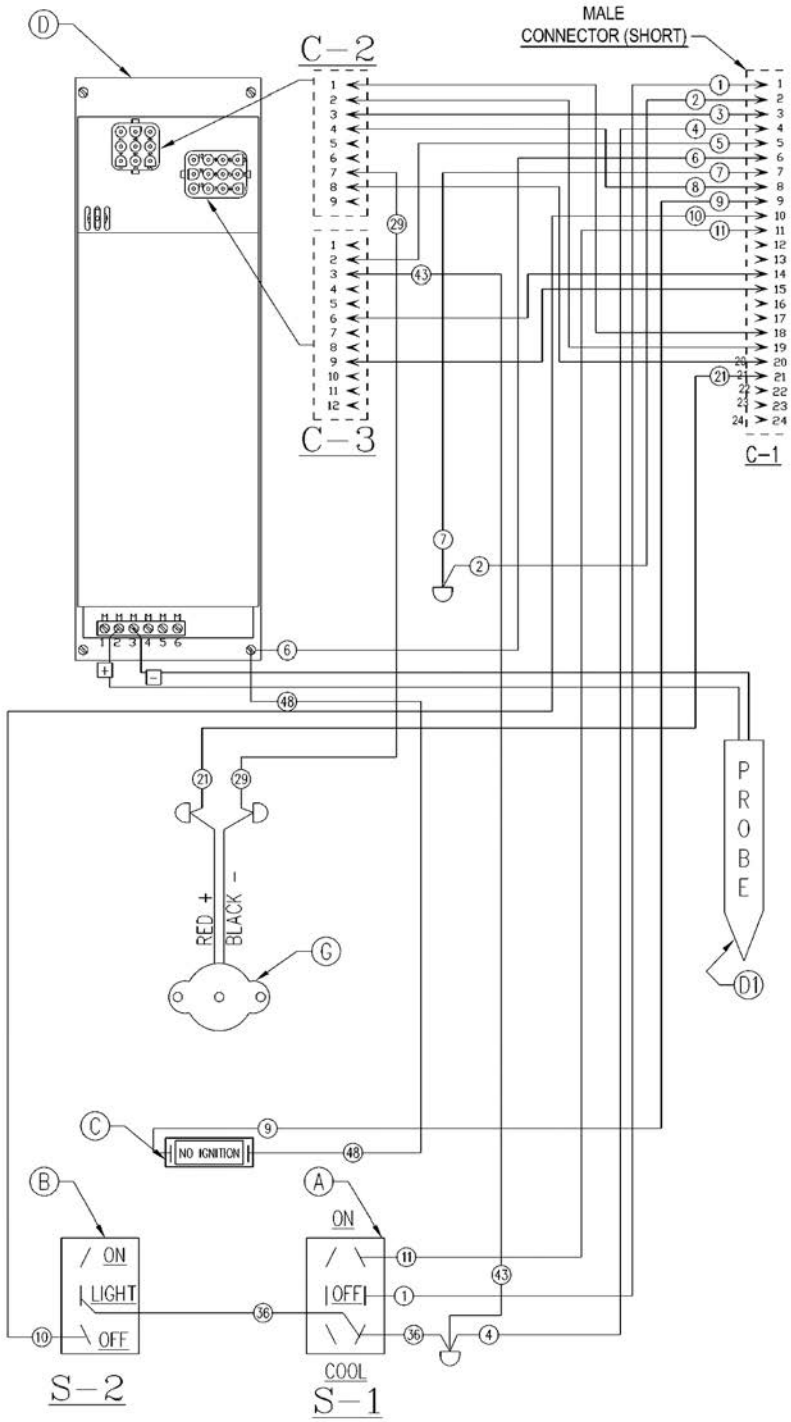

PAGE 1 OF 2
(SEE 10439) 10438

Fig. 117

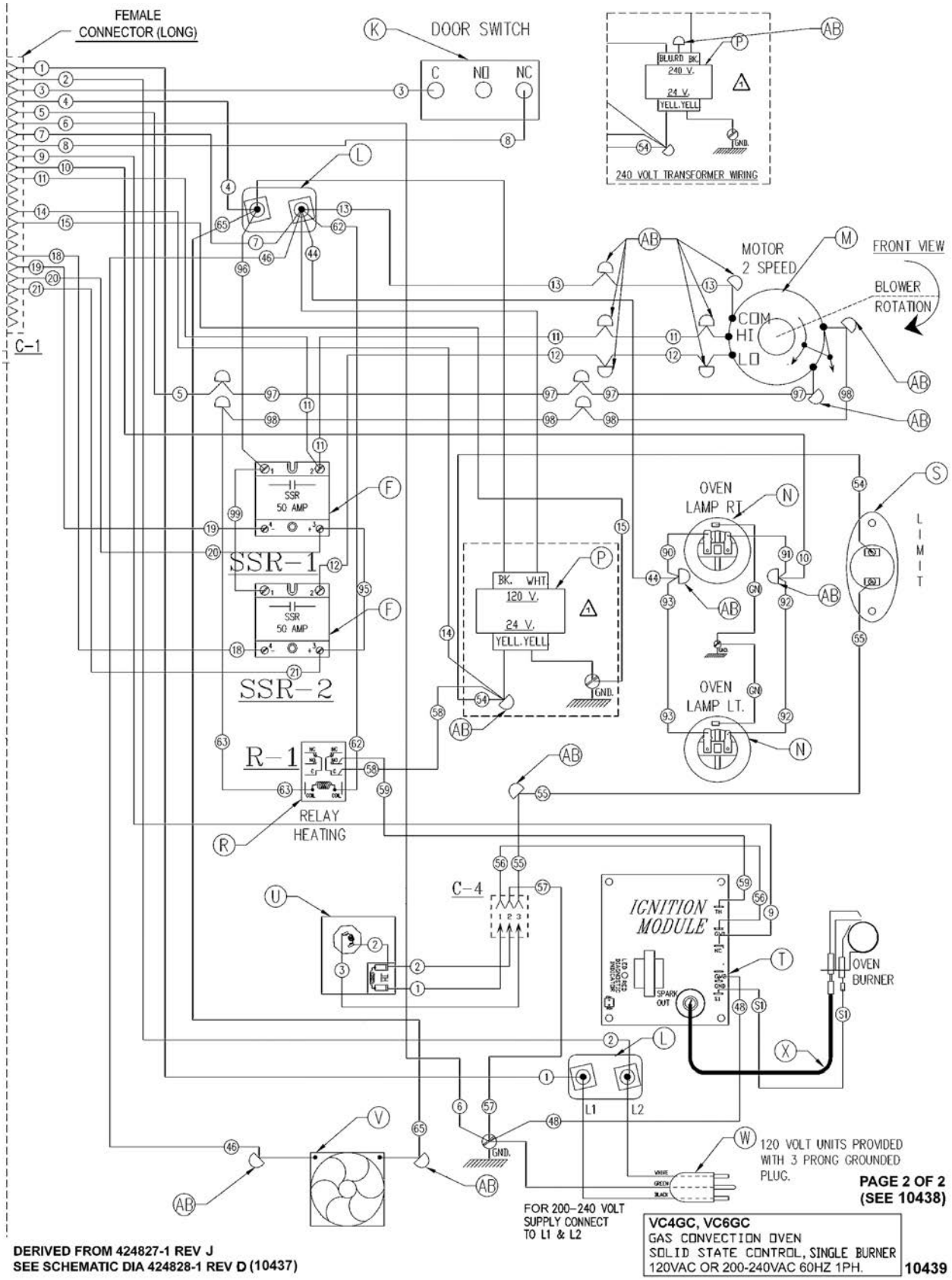
FEMALE
CONNECTOR (LONG)
DOOR SWITCH
C
NO
NC
240 VOLT TRANSFORMER WIRING
MOTOR
2 SPEED
FRONT VIEW
BLOWER
ROTATION
COM
HI
LO
C-1
SSR
50 AMP
SSR-1
SSR-2
OVEN
LAMP RT.
OVEN
LAMP LT.
LIMIT
BK.
WHT.
120 V.
24 V.
YELL.YELL
GND.
R-1
RELAY
HEATING
C-4
IGNITION
MODULE
SPARK
OUT
OVEN
BURNER
L1
L2
120 VOLT UNITS PROVIDED
WITH 3 PRONG GROUNDED
PLUG.
PAGE 2 OF 2
(SEE 10438)
FOR 200-240 VOLT
SUPPLY CONNECT
TO L1 & L2
VC4GC, VC6GC
GAS CONVECTION OVEN
SOLID STATE CONTROL, SINGLE BURNER
120VAC OR 200-240VAC 60HZ 1PH.
10439
DERIVED FROM 424827-1 REV J
SEE SCHEMATIC DIA 424828-1 REV D (10437)

Fig. 118

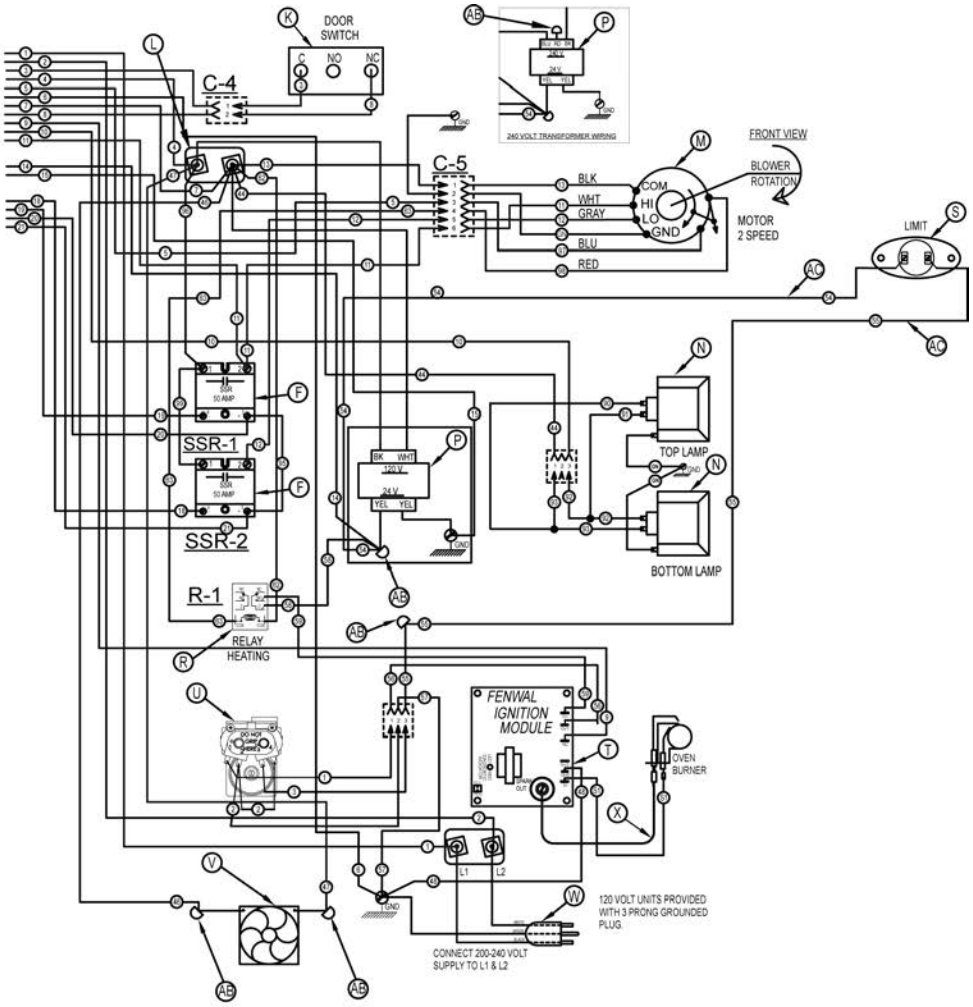

VC and HEC Models
NCC COMPUTER CONTROL - WIRING DIAGRAM
SINGLE BURNER CONVECTION OVEN 120 & 200 V.

Page 2 of 2

DERIVED FROM 00958931

AI4890

STARTING AT SERIAL NUMBER 481907146

VC4GD & VC6GD, VC With Standing Pilot 120 & 200 VOLT

VC4GD & VC6GD, VC With Standing Pilot 120 & 200 VOLT - 00-499814-Y4 - AI4955 (PDF Link)

VC4GD & VC6GD VC with Standing Pilot - 120-200V - 00-499814-Y4 - AI4955

VC WITH STANDING PILOT VC4GD & VC6GD 120 & 200 VOLT

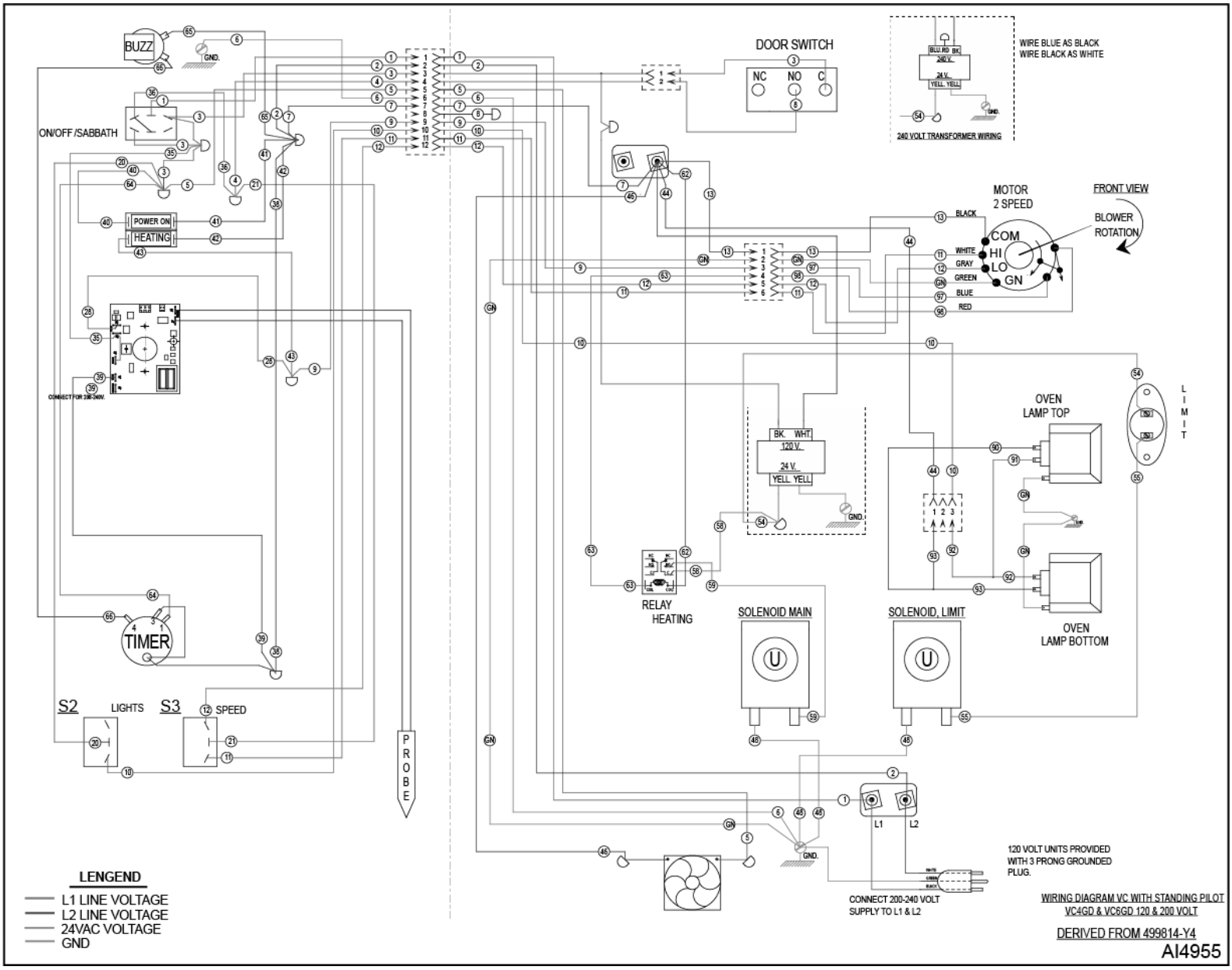
BUZZ
GND.
ON/OFF /SABBATH
POWER ON
HEATING
TIMER
S2
LIGHTS
S3
SPEED
PROBE
DOOR SWITCH
NC
NO
C
WIRE BLUE AS BLACK
WIRE BLACK AS WHITE
240 VOLT TRANSFORMER WIRING
MOTOR
2 SPEED
FRONT VIEW
BLOWER
ROTATION
BLACK
WHITE
GRAY
GREEN
BLUE
RED
COM
HI
LO
GN
OVEN
LAMP TOP
OVEN
LAMP BOTTOM
LIMIT
RELAY
HEATING
SOLENOID MAIN
SOLENOID, LIMIT
L1
L2
120 VOLT UNITS PROVIDED
WITH 3 PRONG GROUNDED
PLUG.
CONNECT 200-240 VOLT
SUPPLY TO L1 & L2
LENGEND
L1 LINE VOLTAGE
L2 LINE VOLTAGE
24VAC VOLTAGE
GND
WIRING DIAGRAM VC WITH STANDING PILOT
VC4GD & VC6GD 120 & 200 VOLT
DERIVED FROM 499814-Y4
AI4955

Fig. 120

VC4GD & VC6GD, VC With Standing Pilot 120 & 200 VOLT - 00-499814-Y-H - AI5743 Starting Serial Number 482080151 (PDF Link)

VC4GD & VC6GD - 120-200V - 0099814-Y-H - AI5743

STARTING AT SERIAL NUMBER 482080151

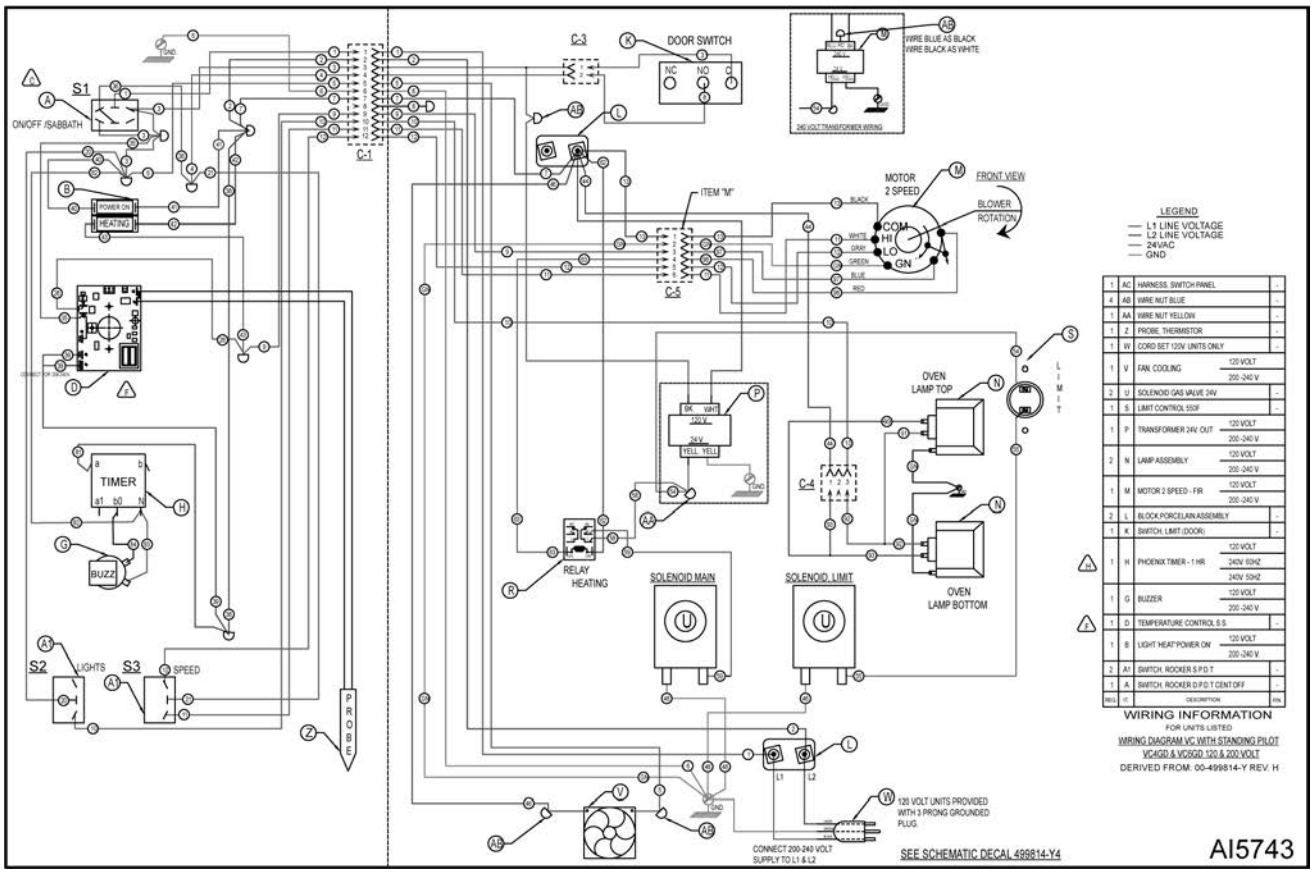

Fig. 121

TROUBLESHOOTING



⚠ WARNING

Certain procedures in this section require electrical test or measurements while power is applied to the machine. Exercise extreme caution at all times and follow Arc Flash procedures. If test points are not easily accessible, disconnect power and follow Lockout/Tagout procedures, attach test equipment and reapply power to test.

ALL MODELS

SYMPTOMS	POSSIBLE CAUSES
Blower motor doesn't run with 1S in "Cool Down" or "On" position.	1. Line voltage. 2. Power switch (S1) malfunction. 3. Switch (S3) malfunction. 4. Interconnecting wiring malfunction. 5. Motor inoperable.
Blower motor doesn't run in "On" position. "Cool Down" functions OK.	1. Door switch malfunction. 2. Power switch contacts inoperative. 3. Interconnecting wiring malfunction.
Blower motor doesn't run in "Cool Down" position. Runs OK in "On" position.	1. Power switch malfunction. 2. Interconnecting wiring malfunction.
Gas does not ignite; No spark; No Ignition Light ON.	1. Shorted electrode on ignitor/flame sense. 2. Ignitor cable (high voltage) OPEN. 3. Heat relay (R3) malfunction. 4. Transformer (T1) inoperative. 5. High limit thermostat open. 6. Interconnecting wiring malfunction. 7. Ignition Module malfunction.
Sparks but gas does not ignite.	1. Gas solenoid valve OFF or inoperative. 2. Manual gas valve CLOSED. 3. Gas supply OFF or Insufficient gas pressure. 4. Interconnecting wiring malfunction. 5. Ignition Module malfunction.

SYMPTOMS	POSSIBLE CAUSES
Gas ignites but will not maintain flame.	1. Igniter lead connections malfunction. 2. Ignitor ground inoperative. 3. Ignitor/flame sense malfunction. 4. Insufficient gas pressure. 5. Snorkel vent plugged, obstructed or missing. 6. Incorrect polarity from transformer (T1) to Ignition module.
Excessive or low heat.	1. Temperature probe malfunction on models HGC5/5X. (Thermostat malfunction on models DGC5) 2. Temperature control board malfunction. 3. Gas pressure Insufficient. 4. Gas orifice plugged or obstructed.
Mechanical Timer inoperative or not functioning properly.	1. Interconnecting wiring malfunction. 2. Line voltage incorrect. 3. Timer malfunction.
Cook mode OK, no Hold mode. (Cook & Hold models only).	1. Cook and Hold switch (S3) malfunction. 2. R2 hold relay malfunction. 3. Cook & Hold timer malfunction. 4. Interconnecting wiring malfunction.
Component cooling Fan does not run.	1. Motor inoperable. 2. Interconnecting wiring malfunction.
Uneven Cooking.	1. Convection Fan motor speed/direction. 2. Poor combustion. A. Gas pressure incorrect. B. Exhaust vent plugged or obstructed. C. Snorkel Vent plugged or obstructed. 3. Air flow Baffles missing or damaged.
Intermittent problems.	1. High ambient temperatures. 2. Wiring connections loose. 3. Cooling fan malfunction.
No power to temperature control.	1. Power switch (S1) in “Cool Down”. 2. Door or door switch open.

IGNITION MODULE DIAGNOSTICS

NUMBER OF LED FLASHES	INDICATES	POSSIBLE CAUSE
2 Flashes	Burner flame with no call for heat.	1. Main gas valve stuck open, burner on with no call for heat from the temperature control system. Replace main gas valve. 2. Check flame sensor and sensor wire. 3. Ignition module malfunction.
3 Flashes	Ignition system has locked out.	1. Ignition module could not "Prove" flame after three tries for ignition within the lockout time timing provided. A. Check for gas supply to burner. B. Check for spark to ignition electrode. 1) Check spark gap (gap should be 1/8"). C. Check ignition cable for continuity. D. Check for flame current in flame sense wire (0.000001 Amp Min. DC) using FC designated terminals. 1) Check burner adjustment (air/gas). **NOTE:** If A thru D check out, replace ignition module.
4 Flashes	Internal board problem.	1. Ignition module malfunction. Remove power from "R" terminal for five seconds then reconnect. If fault remains, replace ignition module.

COMPUTER CONTROL MODELS ONLY

SYMPTOM	POSSIBLE CAUSES
Oven does not heat.	1. High limit switch open. 2. Probe malfunction. 3. Control malfunction.
High limit thermostat shutting off gas burner.	1. Probe malfunction. 2. Control malfunction.

SYMPTOM	POSSIBLE CAUSES
Oven not hot enough.	1. Probe malfunction. 2. Control range high (rH1) setting to low. SETUP MODE under COMPUTER CONTROL (VC4GD, VC6GD). 3. Control malfunction.

Error Codes

In the display window, the error code will alternate between the code and the oven cavity temperature or dashes if the oven is calling for heat (heat light on). When the condition causing the error is resolved, normal oven operation can resume.

NOTE: To check a "Setup Parameter" and its corresponding "Data Value", see "SETUP MODE" under COMPUTER CONTROL (VC4GC/6GC).

NOTE: If the cause of the error is not apparent, check for these conditions as they may also cause errors to occur: Electrical noise or a noise event, excess environmental moisture or temperature, or vibration.

CODE & PROBLEM	PROBABLE CAUSE	SOLUTION
Er01 - ROM checksum error	Internal ROM malfunction	Cycle power
Er02 - RAM checksum error	Internal RAM malfunction	Cycle power
Er03 - Ambient sensor error	Ambient temperature is below 32°F	Check ambient temperature at the control.
Er04 - Configuration error	Microprocessor malfunction	Cycle power
Er05 - EPROM error	Power loss while storing data	Cycle power
Er06 - Zone 1 A/D underflow error	• Incorrect sensor type • Measuring temperature outside the sensor range	• Check the InP1 setup parameter. Verify it matches your sensor. • Check sensor and connections for a reversed or open sensor. If the condition causing the error is resolved, the error will clear.
Er07 - Zone 1 A/D overflow error	Open sensor	• Check the InP1 setup parameter. Verify it matches your sensor. • Check sensor and connections for a reversed or open sensor. If the condition causing the error is resolved, the error will clear.
Er10 - Stack overflow error	Microprocessor malfunction	• Cycle power • Check sensor and connections for a reversed or open sensor

CODE & PROBLEM	PROBABLE CAUSE	SOLUTION
Er11 - Open sensor error	Open sensor	• Check the InP1 setup parameter. Verify it matches your sensor. • Check sensor and connections for a reversed or open sensor. If the condition causing the error is resolved, the error will clear.
Er12 - Shorted sensor	• Incorrect sensor type • Measuring temperature outside the sensor range	• Check the InP1 setup parameter. Verify it matches your sensor. • Check sensor and connections for a reversed or open sensor. If the condition causing the error is resolved, the error will clear.

MECHANICAL CONTROLS TROUBLESHOOTING

VC Mechanical Controls Troubleshooting

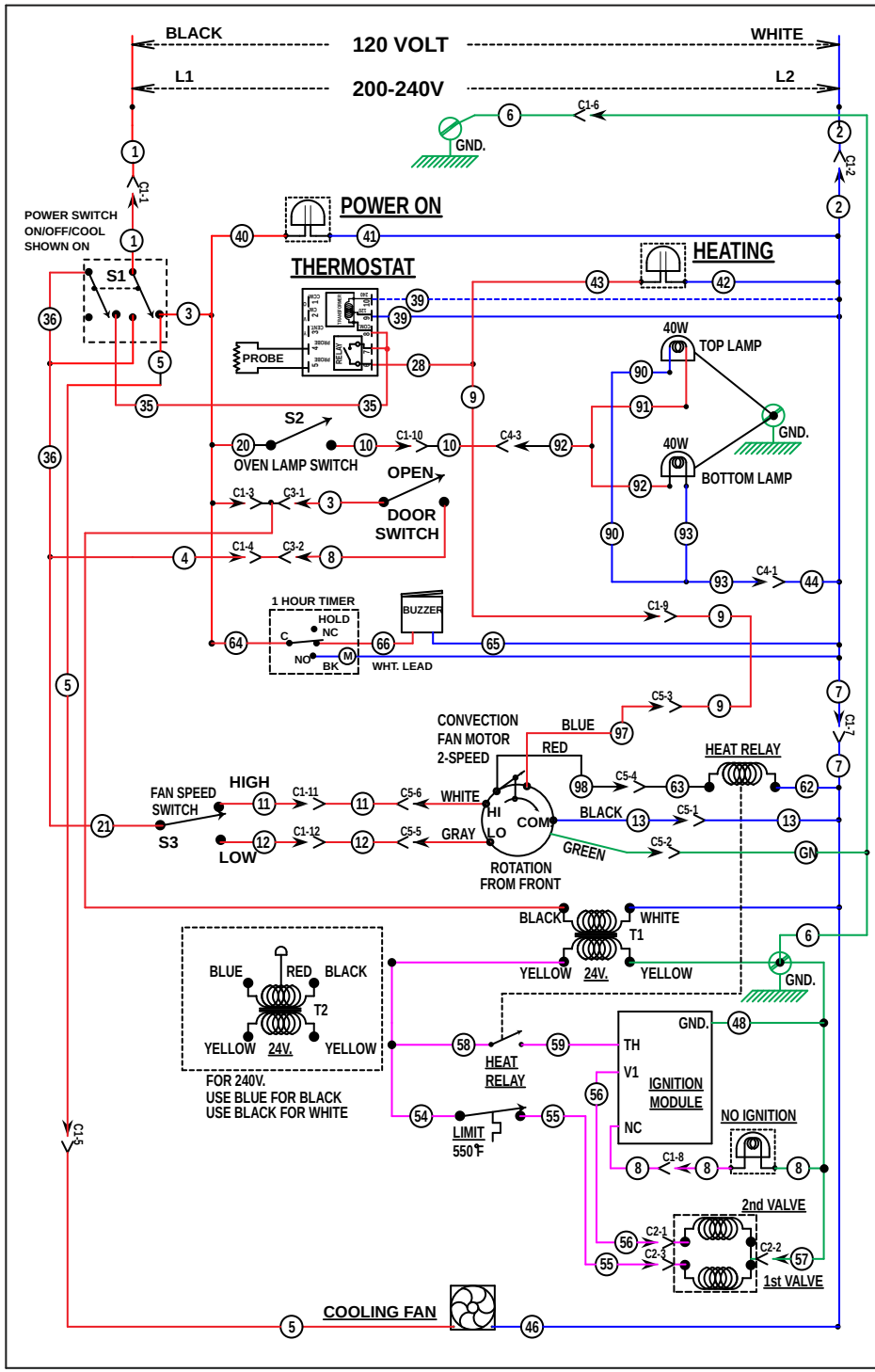

LEGEND

- L1 LINE VOLTAGE
- L2 LINE VOLTAGE
- 24V
- GND

VC4 & 6GD / HGC / WKG CONVECTION OVEN STD. CONTROLS 120 TO 240V.

DERIVED FROM 424299-1 Rev. D

STARTING SERIAL NUMBER 481907146

AI4896

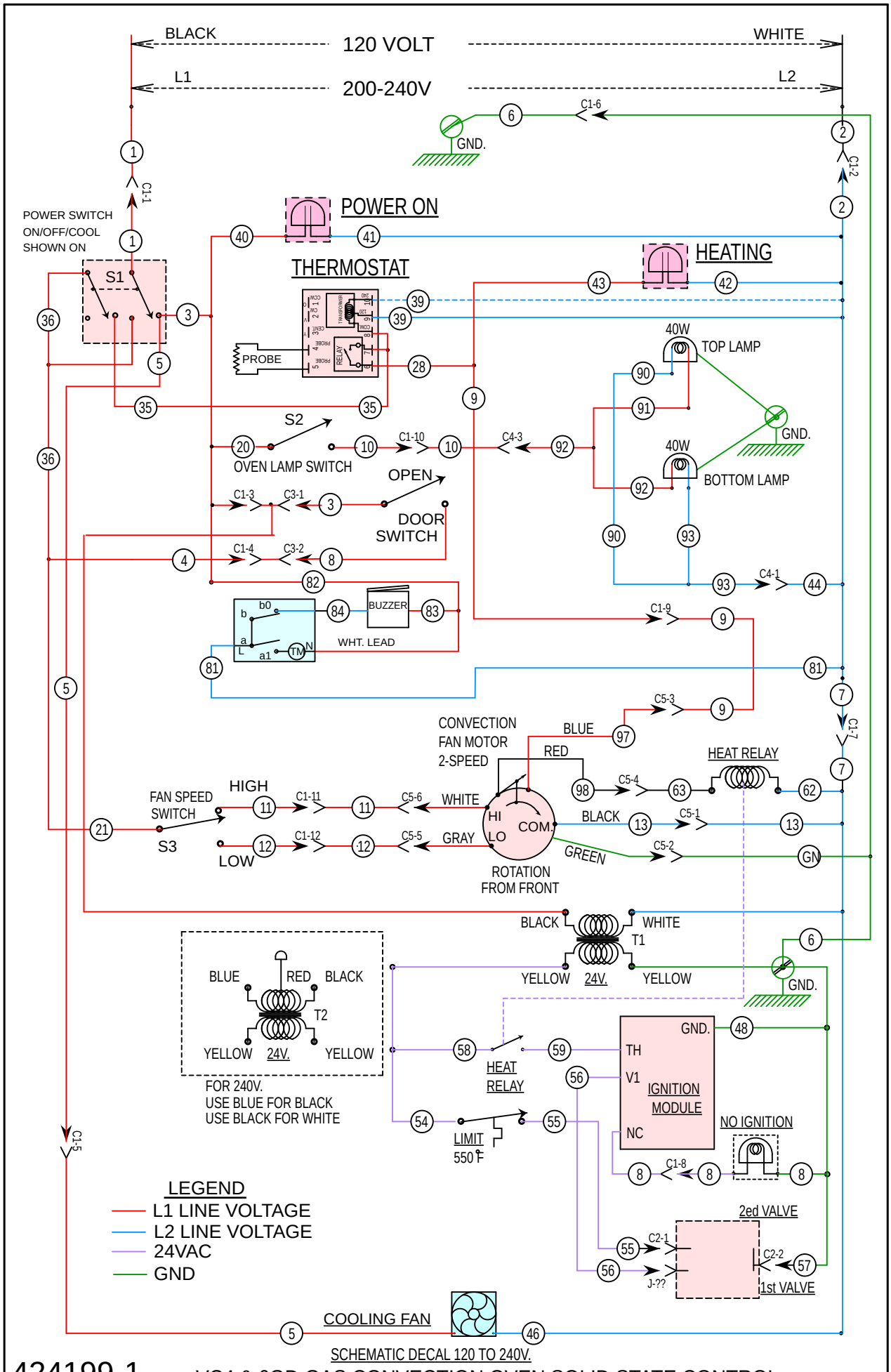

SCHEMATIC DECAL 120 TO 240V.

424199-1
REV F

VC4 & 6GD GAS CONVECTION OVEN SOLID STATE CONTROL

STARTING SERIAL NUMBER 482080151

AI5735

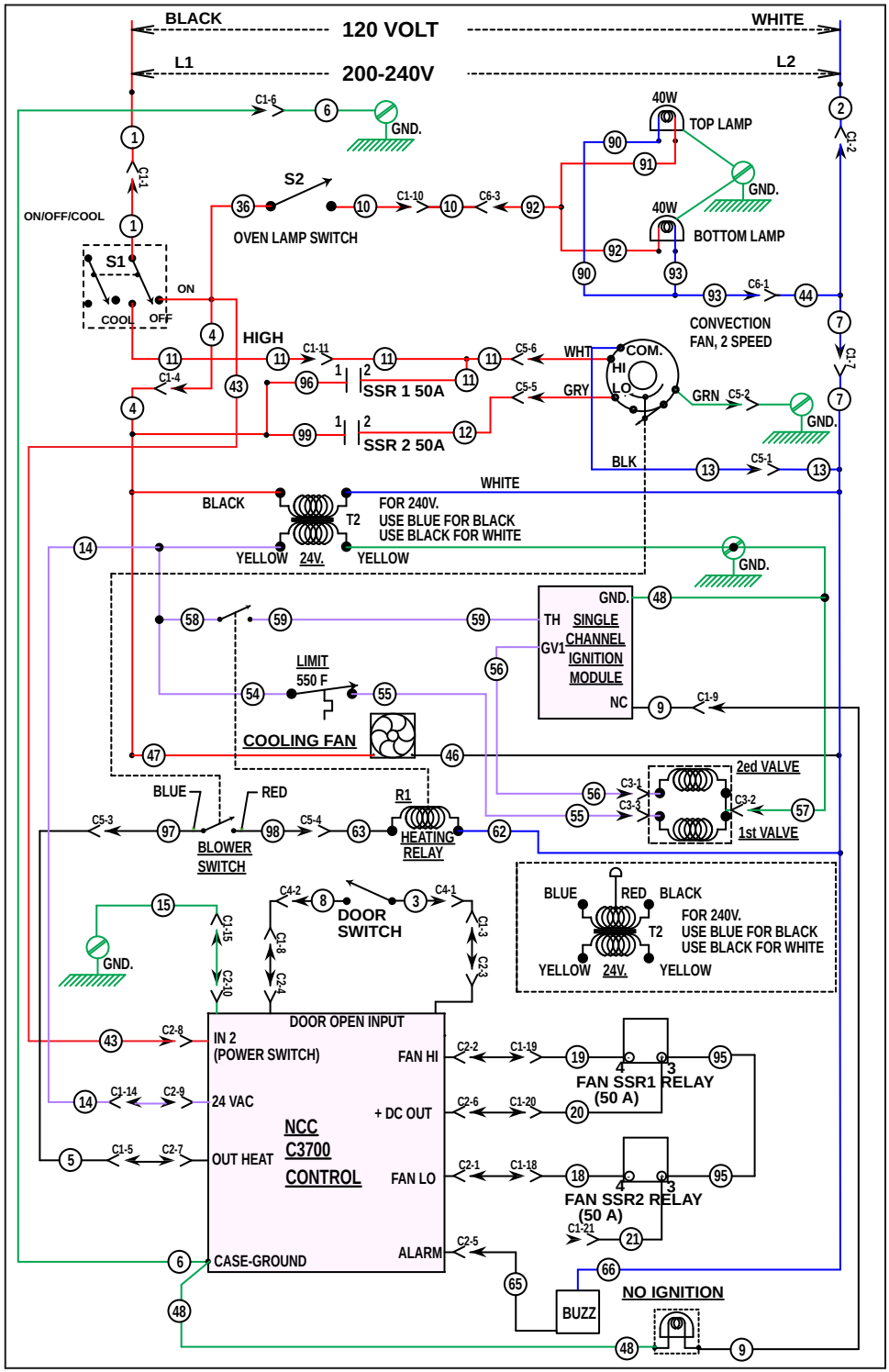

LEGEND

- L1 LINE VOLTAGE
- L2 LINE VOLTAGE
- 24VAC
- GND

VC4 & 6GC / HGC / HEC / WKGC CONVECTION OVENS SINGLE BURNER W/C 3700 120 TO 240V.

DERIVED FROM 959177 Rev C

STARTING SERIAL NUMBER 481907146

AI4898

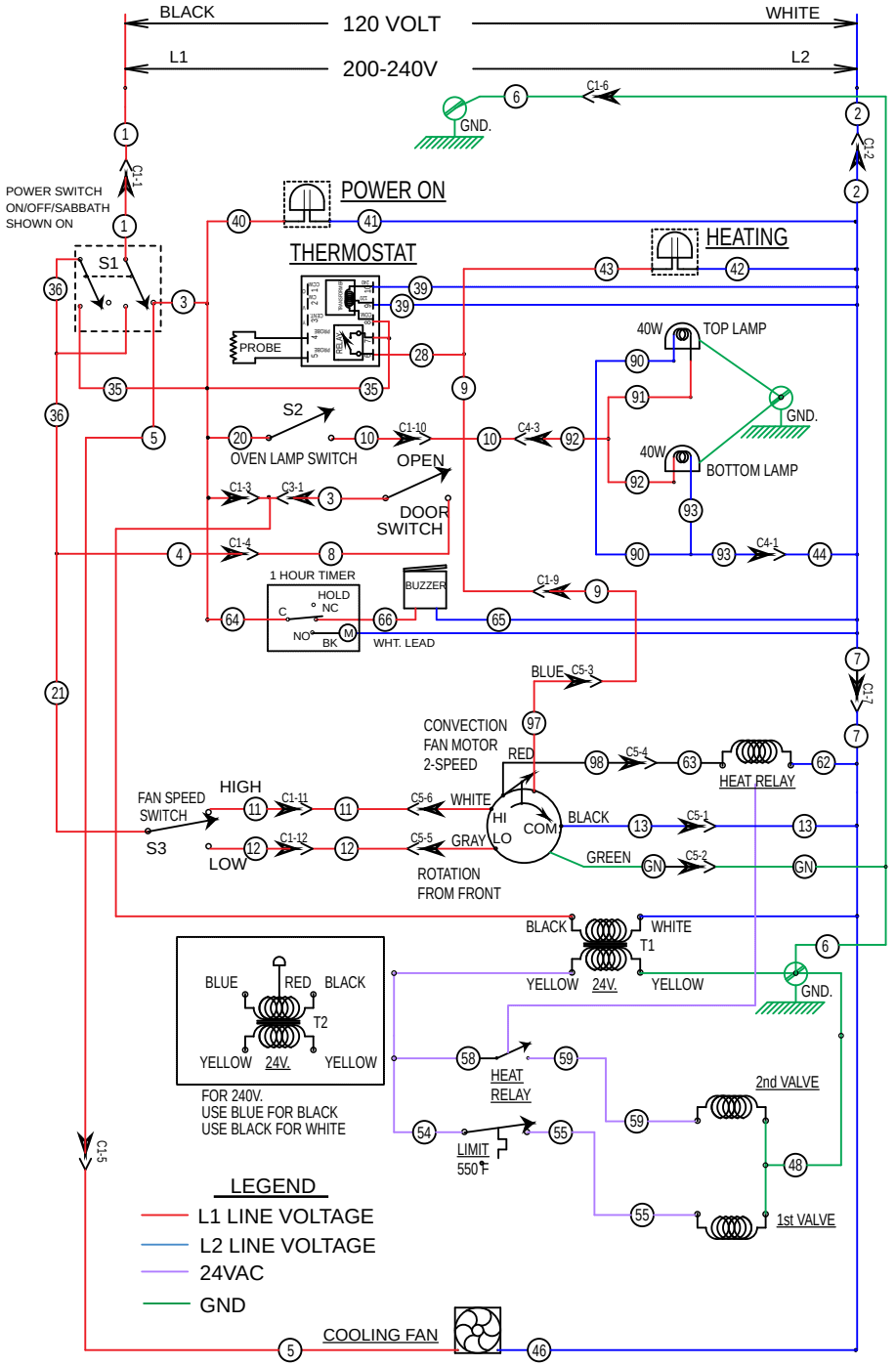

Derived From

499814-Y4 REV D GAS CONVECTION OVEN VC4 WITH STD. PILOT

AI5119

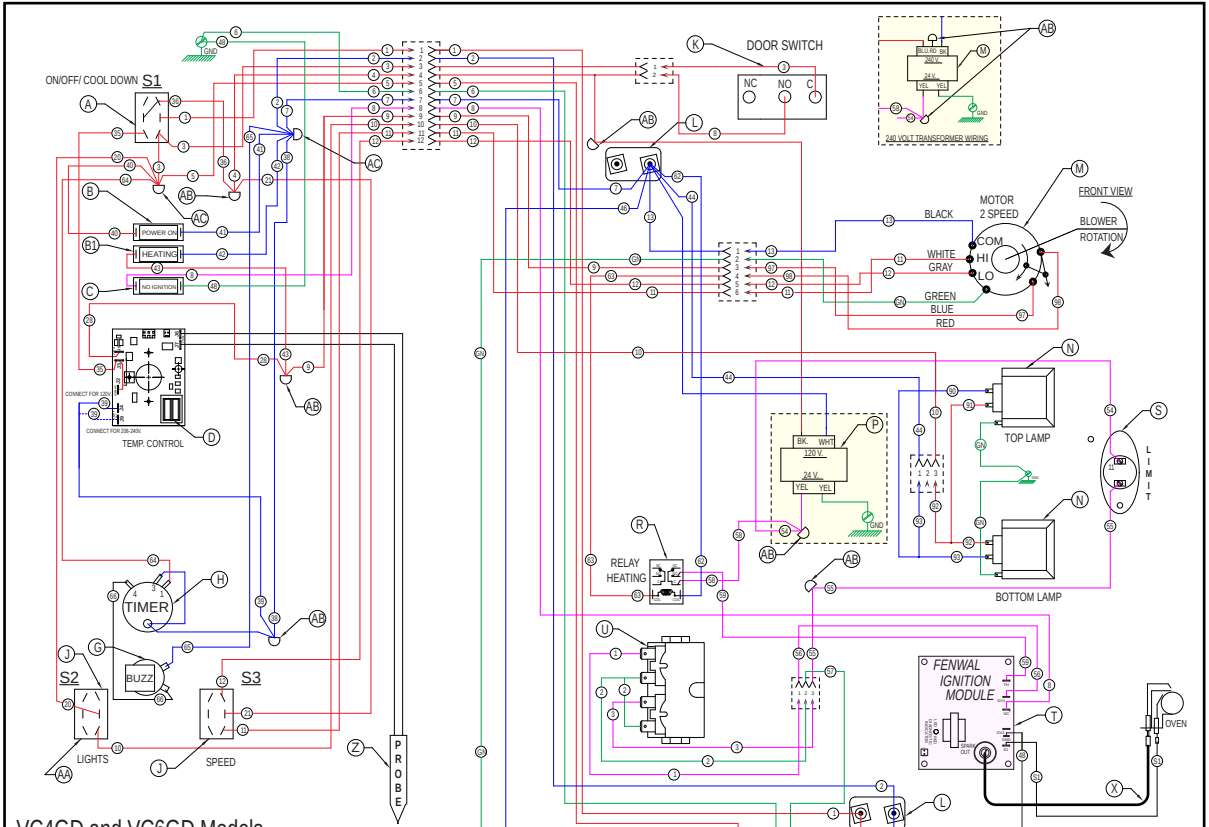

VC4GD and VC6GD Models

SINGLE BURNER CONVECTION OVEN 120 & 200 V.
SOLID STATE CONTROL WIRING DIAGRAM

DERIVED FROM 00424198

STARTING SERIAL NUMBER 481907146

AI4888

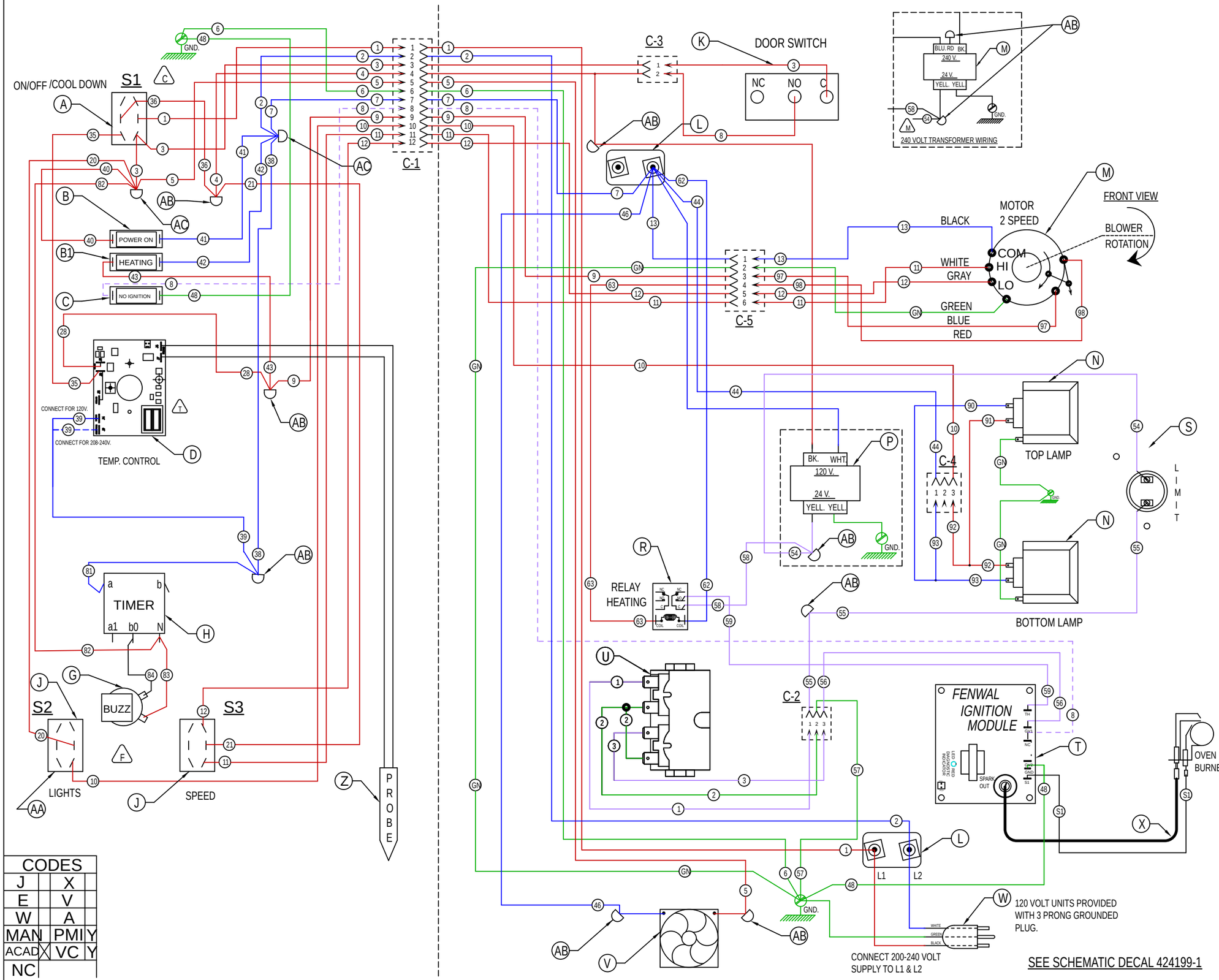

LENGEND

- L1 LINE VOLTAGE
- L2 LINE VOLTAGE
- 24VAC VOLTAGE
- GND

	1	2	3	
S	1	2	3	
	1	AA	SWITCH, TOGGLE D.P.D.T. - LIGHTS	-
	1	Z	PROBE, THERMISTOR	-
	1	X	WIRE, SPARK IGNIT. 36"	-
K	1	W	CORD SET 120V. UNITS ONLY	-
	1	V	FAN, COOLING	120 VOLT 200 -240 V.
L	1	U	MAXITROL 200 VALVE	NAT. GAS L.P. GAS
	1	T	CONTROL, SPARK IGNITION	-
S	1	S	LIMIT CONTROL 550F	-
	1	R	RELAY, HEATING	120 VOLT 200 -240 V.
	1	P	TRANSFORMER 24V. OUT	120 VOLT 200 -240 V.
	2	N	LAMP ASSEMBLY, BJB	120 VOLT 200 -240 V.
	1	M	MOTOR 2 SPEED FIR	120 VOLT 200 -240 V.
	2	L	BLOCK,PORCELAIN ASSEMBLY	-
	1	K	SWITCH, LIMIT (DOOR)	-
	1	J	SWITCH, TOGGLE D.P.D.T - FAN	-
W1	1	H	TIMER - 1 HOUR	120 VOLT 200-240V. 60HZ 200-240V. 50HZ
	1	G	BUZZER	120 VOLT 200 -240 V.
T	1	D	TEMP. CONTROL - NCC	-
	1	C	LIGHT,INDICATOR "NO IGNITION" 28V.	-
P	1	B1	LIGHT "HEAT"	120 VOLT 200 -240 V.
P	1	B	LIGHT "ON"	120 VOLT 200 -240 V.
	1	A	SWITCH, TOGGLE D.P.D.T CENT.OFF	-
REQ.	IT.		DESCRIPTION	FIN.

CODES			
J		X	
E		V	
W		A	
MAN		PMI	Y
ACAD	X	VC	Y
NC			

WIRING INFORMATION

FOR UNITS LISTED

SOLID STATE CONTROL WIRING DIAGRAM

SINGLE BURNER CONVECTION OVEN 120 & 200 V.

DERIVED FROM 00-424198

REV. W1

SEE SCHEMATIC DECAL 424199-1

AI5635

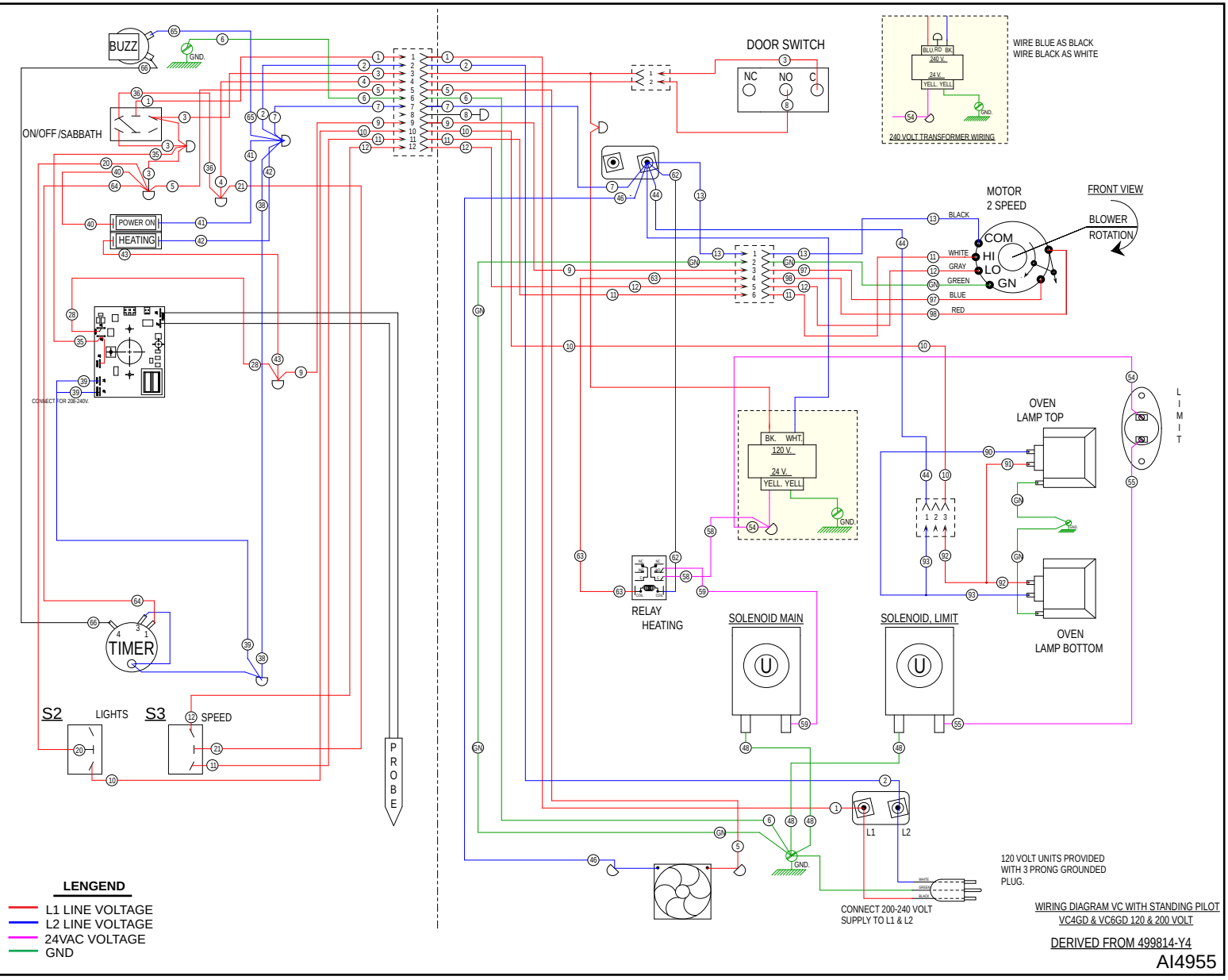
BUZZ
GND.
ON/OFF /SABBATH
POWER ON
HEATING
CONNECT FOR 208-240V.
TIMER
S2
LIGHTS
S3
SPEED
PROBE
DOOR SWITCH
NC
NO
C
WIRE BLUE AS BLACK
WIRE BLACK AS WHITE
BLU. RD. BK.
240 V.
24 V.
YELL. YELL
GND.
240 VOLT TRANSFORMER WIRING
MOTOR
2 SPEED
FRONT VIEW
BLOWER
ROTATION
COM
HI
LO
GN
BLACK
WHITE
GRAY
GREEN
BLUE
RED
BK. WHT.
120 V.
24 V.
YELL. YELL
GND.
OVEN
LAMP TOP
OVEN
LAMP BOTTOM
LIMIT
RELAY
HEATING
SOLENOID MAIN
SOLENOID, LIMIT
L1
L2
GND.
CONNECT 200-240 VOLT
SUPPLY TO L1 & L2
120 VOLT UNITS PROVIDED
WITH 3 PRONG GROUNDED
PLUG.
LENGEND
L1 LINE VOLTAGE
L2 LINE VOLTAGE
24VAC VOLTAGE
GND
WIRING DIAGRAM VC WITH STANDING PILOT
VC4GD & VC6GD 120 & 200 VOLT
DERIVED FROM 499814-Y4
AI4955

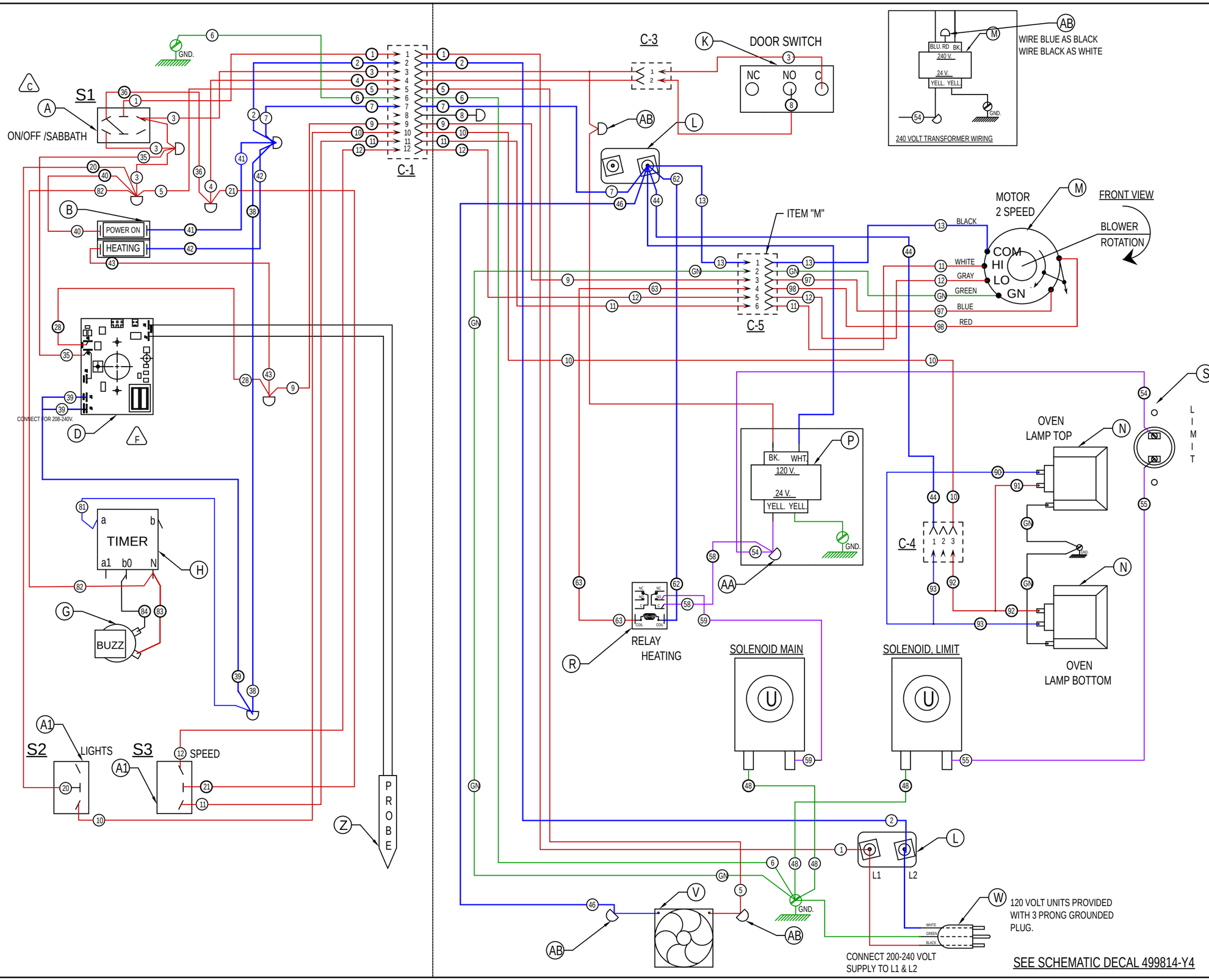

LEGEND

- L1 LINE VOLTAGE
- L2 LINE VOLTAGE
- 24VAC
- GND

1	AC	HARNESS, SWITCH PANEL		-
4	AB	WIRE NUT BLUE		-
1	AA	WIRE NUT YELLOW		-
1	Z	PROBE, THERMISTOR		-
1	W	CORD SET 120V. UNITS ONLY		-
1	V	FAN, COOLING	120 VOLT 200 -240 V.	
2	U	SOLENOID GAS VALVE 24V.		-
1	S	LIMIT CONTROL 550F		-
1	P	TRANSFORMER 24V. OUT	120 VOLT 200 -240 V.	
2	N	LAMP ASSEMBLY	120 VOLT 200 -240 V.	
1	M	MOTOR 2 SPEED - FIR	120 VOLT 200 -240 V.	
2	L	BLOCK,PORCELAIN ASSEMBLY		-
1	K	SWITCH, LIMIT (DOOR)		-
H	1	H	PHOENIX TIMER - 1 HR	120 VOLT 240V. 60HZ 240V. 50HZ
	1	G	BUZZER	120 VOLT 200 -240 V.
F	1	D	TEMPERATURE CONTROL S.S.	-
	1	B	LIGHT 'HEAT''POWER ON'	120 VOLT 200 -240 V.
	2	A1	SWITCH, ROCKER S.P.D.T	-
	1	A	SWITCH, ROCKER D.P.D.T CENT.OFF	-
REQ.	IT.		DESCRIPTION	FIN.

WIRING INFORMATION

FOR UNITS LISTED

WIRING DIAGRAM VC WITH STANDING PILOT

VC4GD & VC6GD 120 & 200 VOLT

DERIVED FROM: 00-499814-Y REV. H

AI5743

MECHANICAL CONTROLS TROUBLESHOOTING

TURN POWER ON

IS POWER LIGHT ON?

NO

CHECK INCOMING POWER

YES

IS HEAT LIGHT ON?

NO

CHECK TEMP CONTROL PROBE

REFERENCE "TEMPERATURE PROBE TEST" IN SERVICE MANUAL.

YES

DOES "NO IGNITION LIGHT" STAY ON?

NO

IS THE HEAT RELAY ENERGIZED?

YES

IS THERE 24V AT THE IGNITION BOARD TERMINAL?

NO

REPLACE HEAT RELAY

REFERENCE "CONTROL PANEL COMPONENTS" IN SERVICE MANUAL

YES

NO

CHECK MOTOR CENTRIFUGAL SWITCH

REFERENCE "MOTOR CENTRIFUGAL SWITCH TEST"

YES

DO YOU HAVE A FLAME?

NO

DO YOU HAVE A SPARK?

YES

NO

IS SPARK GAP SET CORRECTLY?

NO

ADJUST SPARK GAP

REFERENCE "VERIFICATION OF SPARK AT IGNITOR" IN SERVICE MANUAL

YES

CHECK FLAME SENSOR & LOW VOLTAGE WIRE

ARE BOTH GOOD?

YES

REPLACE IGNITION BOARD

REFERENCE "IGNITION CONTROL MODULE" IN SERVICE MANUAL

NO

REPLACE FLAME SENSOR

REFERENCE "SPARK IGNITOR AND FLAME SENSE" IN SERVICE MANUAL

YES

IS THE HIGH VOLTAGE WIRE OKAY?

NO

REPLACE HIGH VOLTAGE WIRE

YES

DO YOU HAVE 24V AT THE GAS VALVE?

NO

REPLACE HIGH LIMIT SWITCH

REFERENCE "HIGH LIMIT THERMOSTAT" IN SERVICE MANUAL

YES

DO YOU HAVE 24 VOTS AT THE GAS VALVE UPON SPARK?

NO

YES

REPLACE GAS VALVE

REFERENCE "GAS SOLENOID VALVE" IN SERVICE MANUAL