CATALOG OF REPLACEMENT PARTS



31099

VC4G & VC6G GAS CONVECTION OVENS

ML-126610	VC4GS
ML-126611	VC4GD
ML-126612	VC6GS
ML-126613	VC6GD
ML-136494	VC4GC
ML-136495	VC6GC

 © Vulcan 2026

Table of Contents

4 CONTROL PANEL (BEFORE S/N 482080151)
6 COMPUTER CONTROL PANEL (ML-136494 & ML-136495) (PREVIOUS)
8 COMPUTER CONTROL PANEL (ML-136494 & ML-136495) (CURRENT)
10 CONTROL PANEL (STARTING SN 482080151)
12 ELECTRICAL COMPONENT PANEL (WITH ROAST & HOLD)
14 ELECTRICAL COMPONENT PANEL
16 SIMULTANEOUSLY OPENING DOORS (BEFORE S/N 481907146)
18 SIMULTANEOUSLY OPENING DOORS
20 INDEPENDENTLY OPENING DOORS (BEFORE S/N 481908857)
22 INDEPENDENTLY OPENING DOORS (STARTING S/N 481908857)
24 OVEN PANELS & MOTOR (PREVIOUS CONSTRUCTION) (BEFORE 3-19-18)
26 CONVECTION MOTOR (AFTER 3-19-18)
28 OVEN PANELS
30 OVEN PANELS AND RACK SUPPORTS (PREVIOUS CONSTRUCTION)
32 OVEN PANELS AND RACK SUPPORTS (CURRENT CONSTRUCTION)
34 GAS PIPING AND FLAME CHAMBER (BEFORE SERIAL NUMBER)
36 GAS PIPING AND FLAME CHAMBER
38 GAS PIPING AND FLAME CHAMBER (STANDING PILOT)

34 00-353589-00001 Probe - Temperature (D Models)

PART NOT ILLUSTRATED

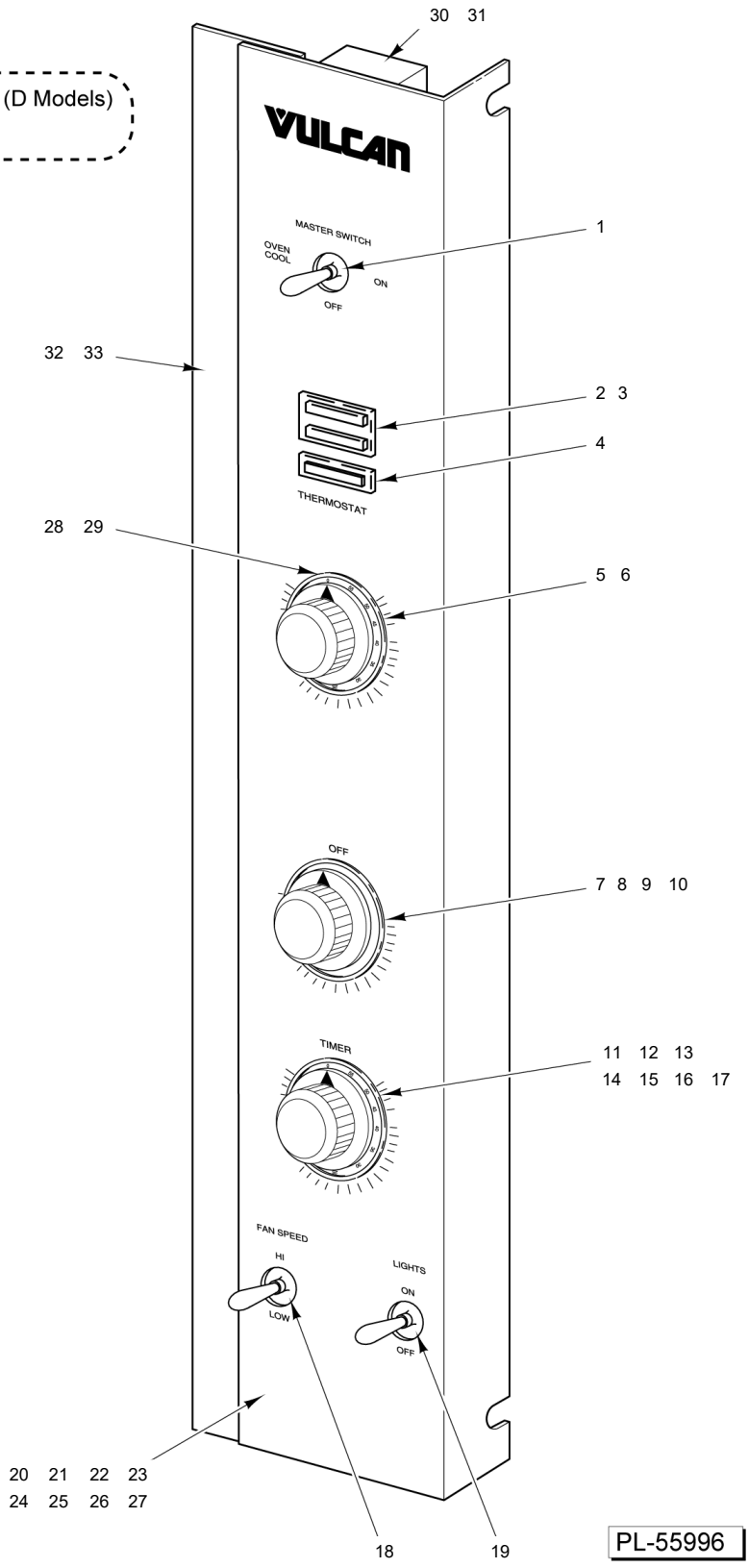

CONTROL PANEL
(BEFORE S/N 482080151)

CONTROL PANEL
(BEFORE S/N 482080151)

ILLUS. PL-55996	PART NO.	NAME OF PART	AMT.
1	00-340324-00008	Switch (4P.D.T.)	1
2	00-913102-00163	Light - Indicator (Double) (120 V.) (Two Single Lights)	1
3	00-913102-00161	Light - Indicator (Double) (240 V.) (Two Single Lights)	1
4	00-354575-00004	Light - Indicator	1
5	00-411242-00001	Knob	1
6	00-913149	Kit - Temperature Control (With Harness)	1
7	00-411242-00001	Knob	1
8	00-411690-00003	Timer (120 V.) (60 Hz.) (5-Hr.)	1
9	00-411690-00004	Timer (240 V.) (60 Hz.) (5-Hr.)	1
10	00-411690-00006	Timer (240 V.) (50 Hz.) (5-Hr.)	1
11	00-411242-00001	Knob	1
12	00-411690-00001	Timer (120 V.) (60 Hz.) (1-Hr.)	1
13	00-411690-00002	Timer (240 V.) (60 Hz.) (1-Hr.)	1
14	00-411690-00003	Timer (120 V.) (60 Hz.) (5-Hr.)	1
15	00-411690-00004	Timer (240 V.) (60 Hz.) (5-Hr.)	1
16	00-411690-00005	Timer (240 V.) (50 Hz.) (1-Hr.)	1
17	00-411690-00006	Timer (240 V.) (50 Hz.) (5-Hr.)	1
18	00-340324-00009	Switch (D.P.D.T.) (Fan)	1
19	00-340324-00012	Switch (S.P.S.T.) (Light)	1
20	00-497280-00001	Overlay - Panel (1 Hr.) (D Models) (Without Roast & Hold)	1
21	00-497284-00001	Overlay - Panel (5 Hr.) (D Models) (Without Roast & Hold)	1
22	00-497285-00001	Overlay - Panel (1 Hr.) (D Models) (With Roast & Hold)	1
23	00-497292-00001	Overlay - Panel (5 Hr.) (D Models) (With Roast & Hold)	1
24	00-424201-00001	Overlay - Panel (1 Hr.) (S Models) (Without Roast & Hold)	1
25	00-424237-00001	Overlay - Panel (5 Hr.) (S Models) (Without Roast & Hold)	1
26	00-424211-00001	Overlay - Panel (1 Hr.) (S Models) (With Roast & Hold)	1
27	00-424244-00001	Overlay - Panel (5 Hr.) (S Models) (With Roast & Hold)	1
28	SC-114-82	Mach. Screw 4-40 x 5/16 Rd. Hd.	2
29	WS-028-20	Washer (SST)	2
30	00-411499-00003	Buzzer (230 V.)	1
31	00-411499-00004	Buzzer (115 V.)	1
32	00-424206-000G1	Panel - Control Weldment (Previous Construction)	1
33	00-959489-000G1	Panel - Control Weldment (Current Construction)	1
34	00-353589-00001	Probe - Temperature (SST) (Use with Item 6) (D Models)	1

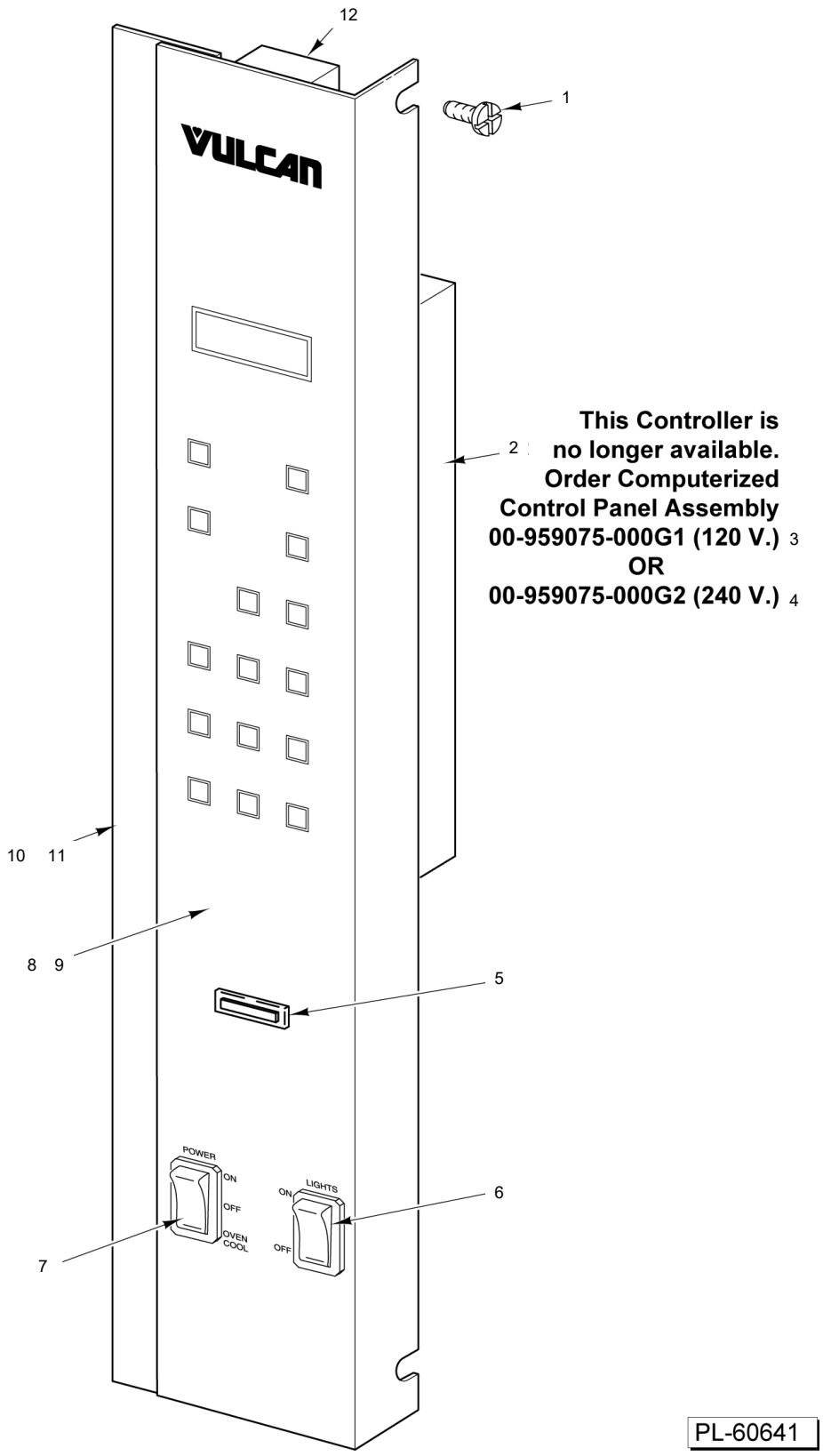

COMPUTER CONTROL PANEL
(ML-136494 & ML-136495) (PREVIOUS)

COMPUTER CONTROL PANEL
(ML-136494 & ML-136495) (PREVIOUS)

ILLUS. PL-60641	PART NO.	NAME OF PART	AMT.
1	SD-037-02	Self-Tapping Screw 10-16 x 1/2 Hex. Hex Washer Hd., Type AB	3
*2		Controller	1
3	00-959075-000G1	Panel - Control Assy. (120 V.) (Complete)	1
4	00-959075-000G2	Panel - Control Assy. (240 V.) (Complete)	1
5	00-354575-00004	Light - Indicator	1
6	00-358628-00002	Switch - Rocker (2-Position)	1
7	00-358628-00001	Switch - Rocker (3-Position)	1
8	00-497506-00001	Overlay - Control Panel (Previous Construction)	1
9	00-497506-00001	Overlay - Control Panel (Current Construction)	1
10	00-424842-000G1	Panel - Weldment (Previous Construction)	1
11	00-499301-000G1	Panel - Control Assy. (Current Construction)	1
12	00-423918-00001	Electronic Beeper	1

* (No Longer Available, order Item 3 or 4.)

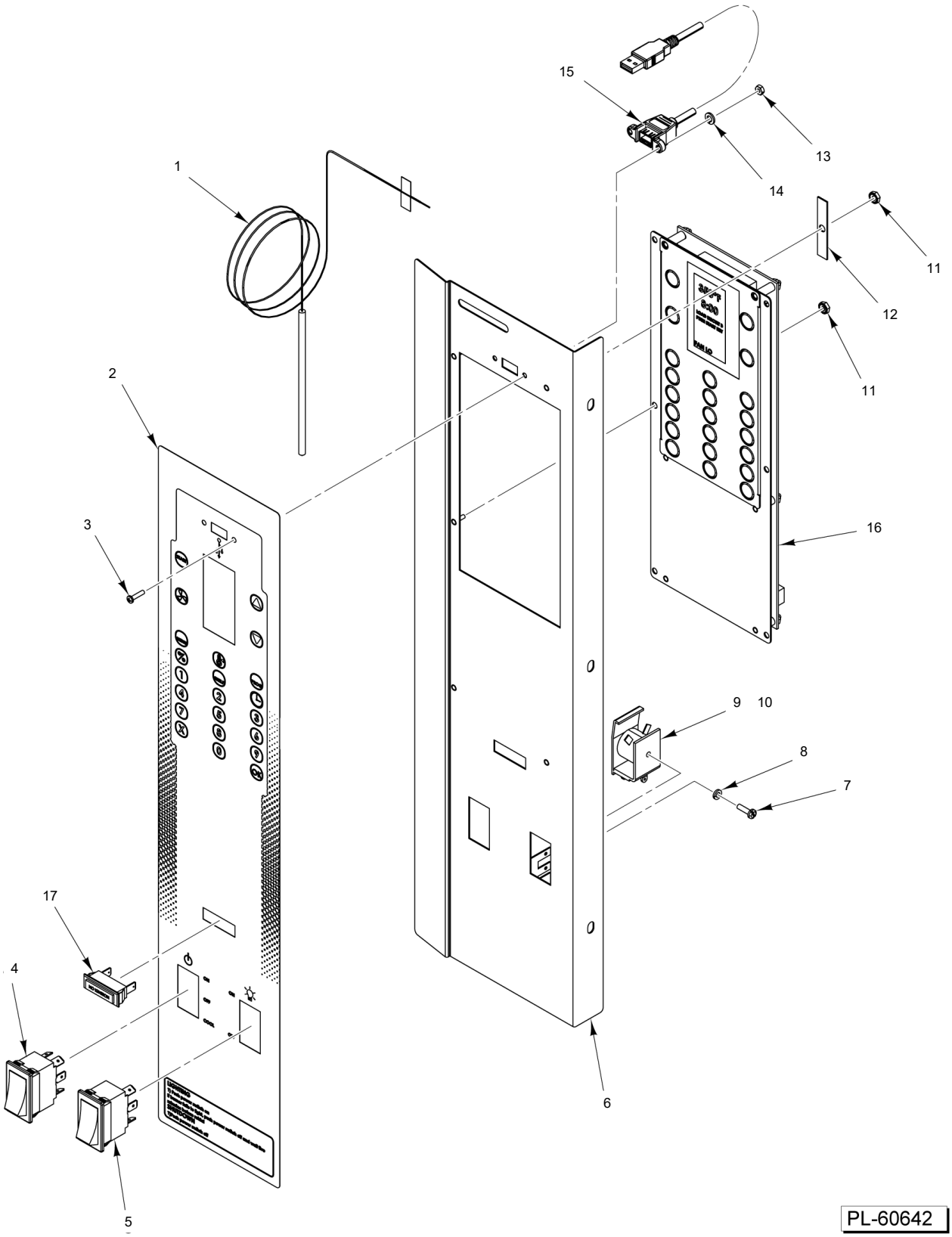

COMPUTER CONTROL PANEL
(ML-136494 & ML-136495) (CURRENT)

COMPUTER CONTROL PANEL
(ML-136494 & ML-136495) (CURRENT)

ILLUS. PL-60642	PART NO.	NAME OF PART	AMT.
1	00-920883-00003	Probe - Temperature For Computer Controller (C Models)	1
2	00-959113-00001	Overlay (Vulcan)	1
3		Mach. Screw 4-40 x 1/2 Phil. Pan Hd	2
4	00-358628-00001	Switch - Rocker (3-Position)	1
5	00-358628-00002	Switch - Rocker (2-Position)	1
6	00-959074	Panel - Weldment	1
7	SC-114-83	Mach. Screw 6-32 x 1/4 Slotted Pan Hd. (SST)	1
8	WL-003-12	Lockwasher #8 Helical	1
9	00-411499-00003	Buzzer (230 V.)	1
10	00-411499-00004	Buzzer (115 V.)	1
11	NS-046-89	Nut Assy. 6-32 Hex KEPS	AR
12	00-959110-00001	Plate	2
13		Nut 4-40 Hex	2
14		Lockwasher	2
15	00-959000-000G1	Cable Assy. (USB) (1 Ft.) (Incls. Items 3, 14, & 15)	1
16	00-959077-00001	Controller - Cooking (NCC)	1
17	00-354575-00004	Light - Indicator	1

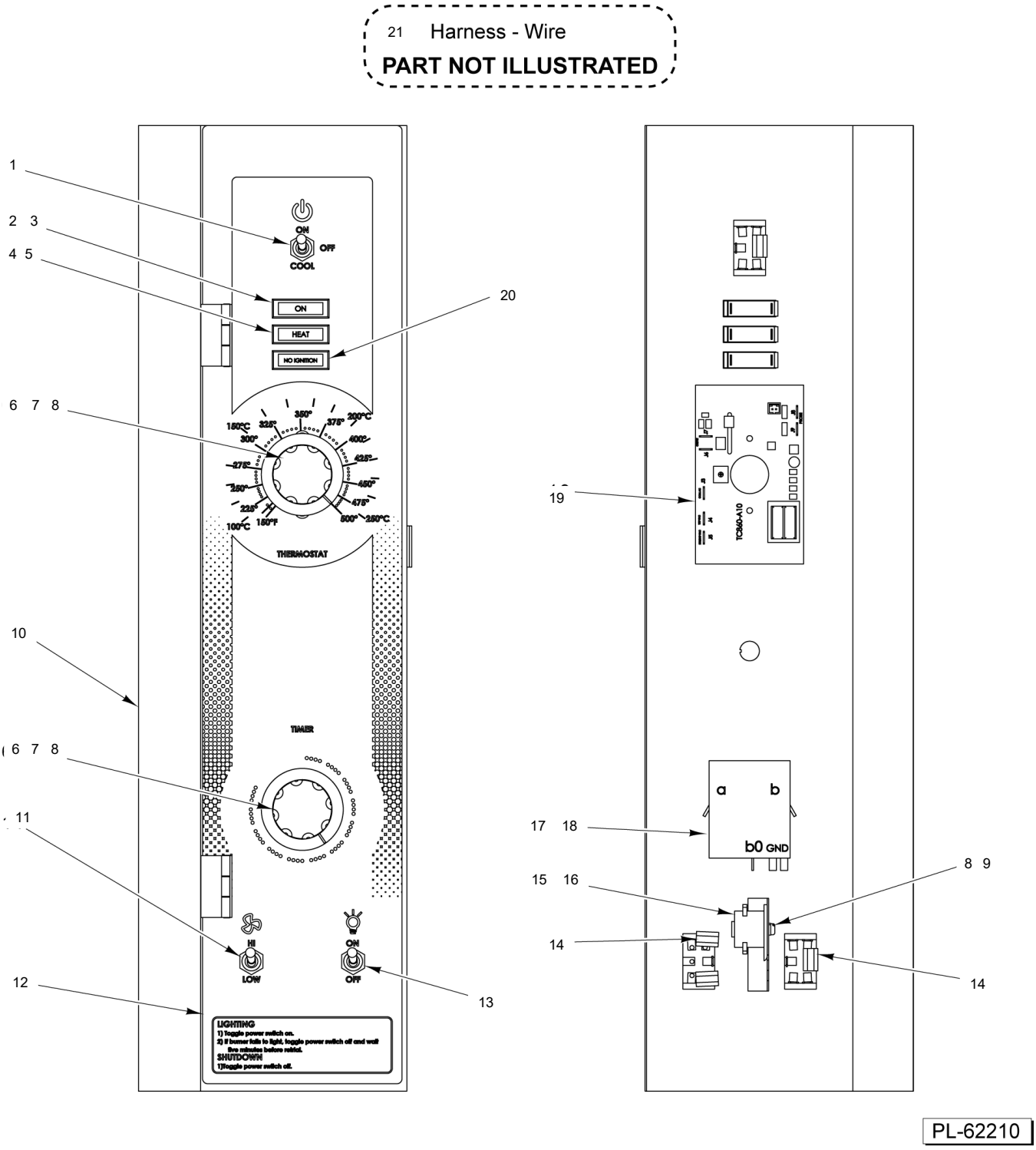

CONTROL PANEL
(STARTING SN 482080151)

CONTROL PANEL
(STARTING SN 482080151)

ILLUS. PL-62210	PART NO.	NAME OF PART	AMT.
1	00-340324-00008	Switch (4P.D.T.)	1
2	00-354575-00007	Light - Indicator (250 V.)	1
3	00-354575-00008	Light - Indicator (120 V.)	1
4	00-354575-00009	Light - Indicator (250 V.)	1
5	00-354575-00010	Light - Indicator (120 V.)	1
6	00-411242-00001	Knob	2
7	WL-024-20	Washer - Lock #6	4
8	SC-114-83	Mach. Screw 6-32 x 1/4 Slotted Pan Hd. (SST)	5
9	WL-003-12	Lockwasher #8 Helical	1
10	00-429280-0YG23	Panel - Control	1
11	00-340324-00009	Switch (D.P.D.T.)	1
12	00-962900-00001	Overlay	1
13	00-340324-00012	Switch (S.P.S.T.)	1
14	00-412575-00007	Insulator - Terminal	4
15	00-411499-00004	Buzzer (115 V.)	1
16	00-411499-00003	Buzzer (230 V.)	1
17	00-962846-00001	Timer (120 V.) (60 Hz.) (1-Hr.)	1
18	00-962846-00002	Timer (240 V.) (60 Hz.) (1-Hr.)	1
19	00-428897-00008	Board - Temperature Control, NCC	1
20	00-354575-00004	Light - Indicator	1
21	00-962903-000G1	Harness - Wire	1

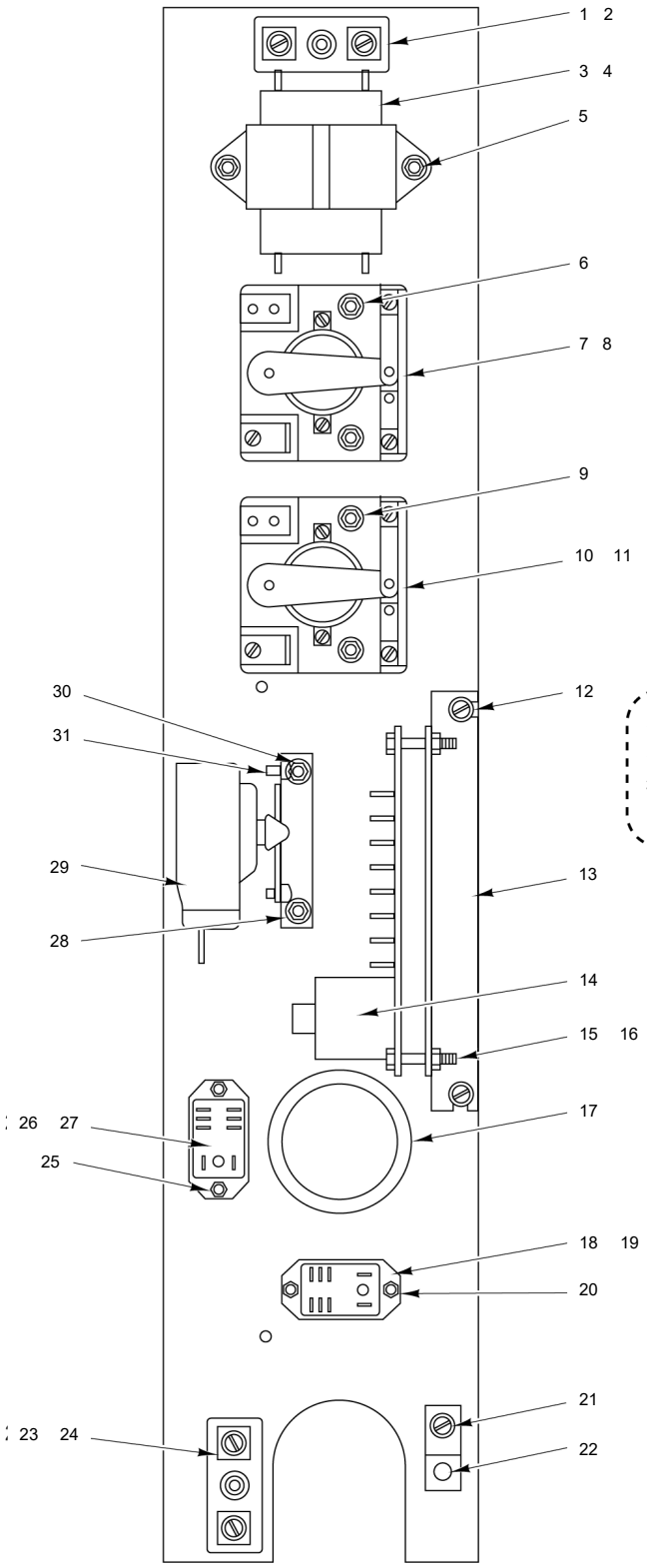

32	00-353589-00001	Probe - Temp (D Models)
33	00-428428-000G1	Wire - Sensor
34	00-961683-000G1	Kit - High Voltage Wire

PARTS NOT ILLUSTRATED

WITH ROAST & HOLD

PL-55995

ELECTRICAL COMPONENT PANEL (WITH ROAST & HOLD)

ELECTRICAL COMPONENT PANEL (WITH ROAST & HOLD)

ILLUS. PL-55995	PART NO.	NAME OF PART	AMT.
1	00-417934-000G1	Block Assy. - Porcelain.	1
2	SD-034-52	Self-Tapping Screw 8-32 x 1 Slotted. Hex Washer Hd., Type T	1
3	00-421758-000G1	Transformer (120 V.) (24 V. Output)	1
4	00-421758-000G2	Transformer (208-240 V.) (24 V. Output)	1
5	SD-032-07	Self-Tapping Screw 10-24 x 1/2 Hex. Hex Washer Hd., Type TT	2
6	SD-034-52	Self-Tapping Screw 8-32 x 1 Slotted. Hex Washer Hd., Type T	2
7	00-411497-000A1	Relay (1-Pole) (120 V.)	1
8	00-411497-000A2	Relay (1-Pole) (200 V.)	1
9	SD-034-52	Self-Tapping Screw 8-32 x 1 Slotted. Hex Washer Hd., Type T	2
10	00-411497-000A1	Relay (1-Pole) (120 V.)	1
11	00-411497-000A2	Relay (1-Pole) (200 V.)	1
12	SD-032-07	Self-Tapping Screw 10-24 x 1/2 Hex. Hex Washer Hd., Type TT	2
13	00-423760-00001	Bracket - Ignition Module	1
14	00-913102-00292	Control - Spark Ignition Kit Includes 18-22 connector 1/4" insulated	1
15	SD-034-52	Self-Tapping Screw 8-32 x 1 Slotted. Hex Washer Hd., Type T	2
16	NS-044-07	Nut Assy. 8-32 Hex KEPS	2
17	FE-024-23	Bushing - Electrical (Snap)	1
18	00-416535-00006	Relay - Heating (120 V.)	1
19	00-416535-00007	Relay - Heating (200-240 V.)	1
20	SD-034-49	Self-Tapping Screw 8-32 x 1/2 Slotted. Hex Washer Hd., Type T	2
21	SD-032-07	Self-Tapping Screw 10-24 x 1/2 Hex. Hex Washer Hd., Type TT	1
22	00-417856-00001	Lug - Grounding (With Set Screw)	1
23	00-417934-000G1	Block Assy. - Porcelain.	1
24	SD-034-52	Self-Tapping Screw 8-32 x 1 Slotted. Hex Washer Hd., Type T	1
25	SD-034-49	Self-Tapping Screw 8-32 x 1/2 Slotted. Hex Washer Hd., Type T	2
26	00-416535-00006	Relay - Heating (120 V.)	1
27	00-416535-00007	Relay - Heating (200-240 V.)	1
28	00-424832-00001	Bracket - Mounting	1
29	00-413764-00001	Thermostat	1
30	SD-032-07	Self-Tapping Screw 10-24 x 1/2 Hex. Hex Washer Hd., Type TT	2
31	SC-114-83	Mach. Screw 6-32 x 1/4 Slotted Pan Hd. (SST)	2
32	00-353589-00001	Probe Temperature (SST) Solid State (D Models)	1
33	00-428428-000G1	Wire Assy. - Flame Sensor	1
34	00-961683-000G1	Kit - High Voltage Wire (incls. Insulator Cap & High Voltage Wire)	1

41	00-353589-00001	Probe - Temp (D Models)	43	00-961683-000G1	Kit - High Voltage Wire
42	00-920883-00003	Probe - Temp (C Models)	44	00-428428-000G1	Wire - Sensor

PARTS NOT ILLUSTRATED

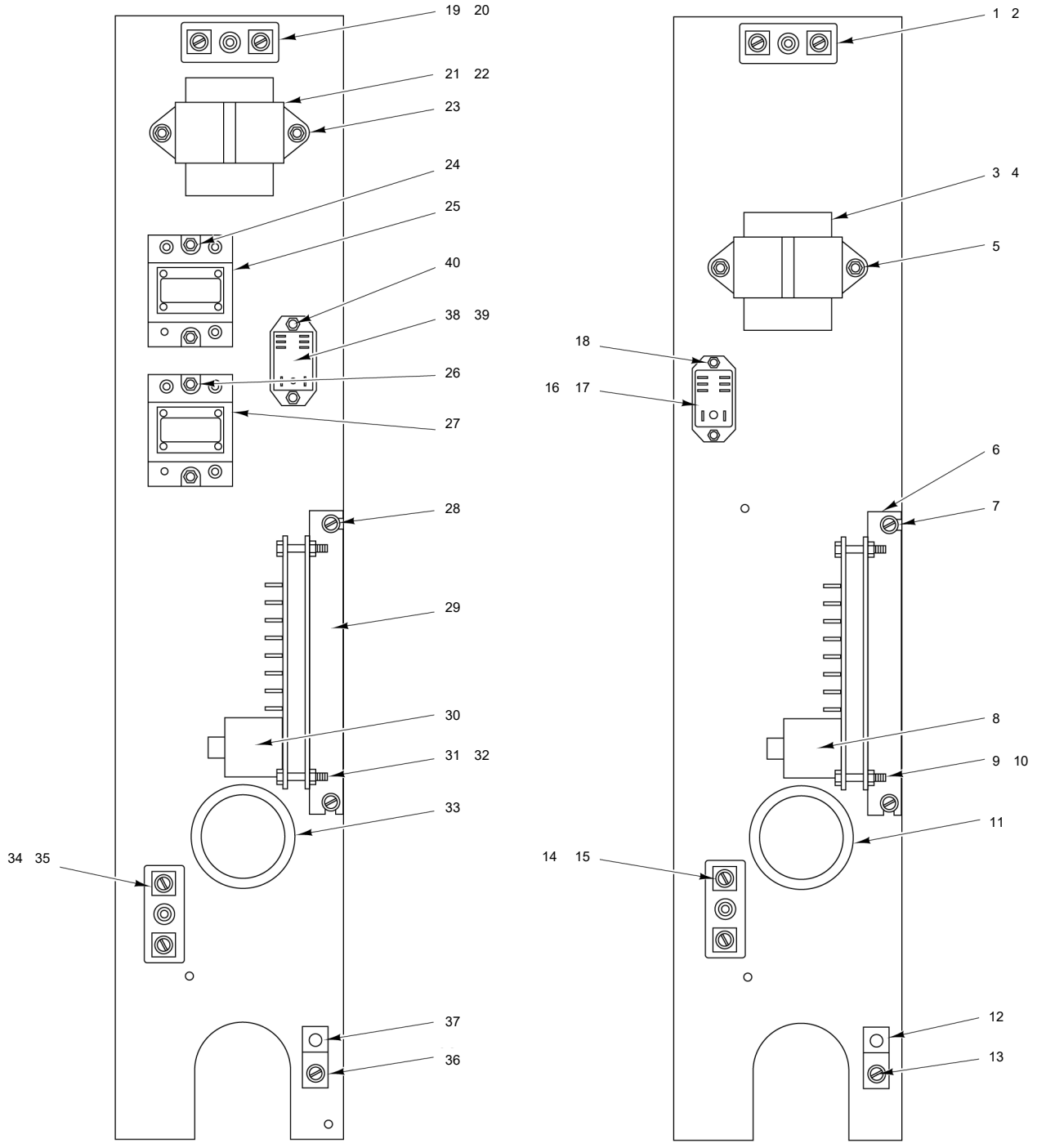

VC4GC / VC6GC

VC4GD / VC6GD
WITHOUT ROAST & HOLD

PL-55994

ELECTRICAL COMPONENT PANEL

ELECTRICAL COMPONENT PANEL

ILLUS. PL-55994	PART NO.	NAME OF PART	AMT.
1	00-417934-000G1	Block Assy. - Porcelain.	1
2	SD-034-52	Self-Tapping Screw 8-32 x 1 Slotted. Hex Washer Hd., Type T	1
3	00-411500-00012	Transformer (120 V.) (24 V. Output)	1
4	00-411500-00013	Transformer (208-240 V.) (24 V. Output)	1
5	SD-032-07	Self-Tapping Screw 10-24 x 1/2 Hex. Hex Washer Hd., Type TT	2
6	00-423760-00001	Bracket - Ignition Module	1
7	SD-032-07	Self-Tapping Screw 10-24 x 1/2 Hex. Hex Washer Hd., Type TT	1
8	00-913102-00292	Control - Spark Ignition Kit Includes 18-22 connector 1/4" insulated	1
9	SD-034-52	Self-Tapping Screw 8-32 x 1 Slotted. Hex Washer Hd., Type T	2
10	NS-044-07	Nut Assy. 8-32 Hex KEPS	2
11	FE-024-23	Bushing - Electrical (Snap)	1
12	00-417856-00001	Lug - Grounding (With Set Screw)	1
13	SD-032-07	Self-Tapping Screw 10-24 x 1/2 Hex. Hex Washer Hd., Type TT	1
14	00-417934-000G1	Block Assy. - Porcelain.	1
15	SD-034-52	Self-Tapping Screw 8-32 x 1 Slotted. Hex Washer Hd., Type T	1
16	00-416535-00006	Relay - Heating (120 V.)	1
17	00-416535-00007	Relay - Heating (200-240 V.)	1
18	SD-034-49	Self-Tapping Screw 8-32 x 1/2 Slotted. Hex Washer Hd., Type T	1
19	00-417934-000G1	Block Assy. - Porcelain.	1
20	SD-034-52	Self-Tapping Screw 8-32 x 1 Slotted. Hex Washer Hd., Type T	1
21	00-421758-000G1	Transformer (120 V.) (24 V. Output)	1
22	00-421758-000G2	Transformer (208-240 V.) (24 V. Output)	1
23	SD-032-07	Self-Tapping Screw 10-24 x 1/2 Hex. Hex Washer Hd., Type TT	2
24	SD-034-52	Self-Tapping Screw 8-32 x 1 Slotted. Hex Washer Hd., Type T	4
25	00-821875-00002	Relay - Solid State (50 Amp.)	2
26	SD-034-52	Self-Tapping Screw 8-32 x 1 Slotted. Hex Washer Hd., Type T	4
27	00-821875-00002	Relay - Solid State (50 Amp.)	2
28	SD-032-07	Self-Tapping Screw 10-24 x 1/2 Hex. Hex Washer Hd., Type TT	1
29	00-423760-00001	Bracket - Ignition Module	1
30	00-913102-00292	Control - Spark Ignition Kit	1
31	SD-034-52	Self-Tapping Screw 8-32 x 1 Slotted. Hex Washer Hd., Type T	2
32	NS-044-07	Nut Assy. 8-32 Hex KEPS	2
33	FE-024-23	Bushing - Electrical (Snap)	1
34	SD-034-52	Self-Tapping Screw 8-32 x 1 Slotted. Hex Washer Hd., Type T	1
35	00-417934-000G1	Block Assy. - Porcelain.	1
36	SD-032-07	Self-Tapping Screw 10-24 x 1/2 Hex. Hex Washer Hd., Type TT	1
37	00-417856-00001	Lug - Grounding (With Set Screw)	1
38	00-416535-00006	Relay - Heating (120 V.)	1
39	00-416535-00007	Relay - Heating (200-240 V.)	1
40	SD-034-49	Self-Tapping Screw 8-32 x 1/2 Slotted. Hex Washer Hd., Type T	2
41	00-353589-00001	Probe - Temperature (SST) (Use W/Solid-State Temperature Controllers) (D Models)	1
42	00-920883-00003	Probe - Temperature For Computer Controller (Use W/Digital Temperature Controllers) (C Models)	1
43	00-961683-000G1	Kit - High Voltage Wire (incls. Insulator Cap & High Voltage Wire)	1
44	00-428428-000G1	Wire Assy. - Flame Sensor	1

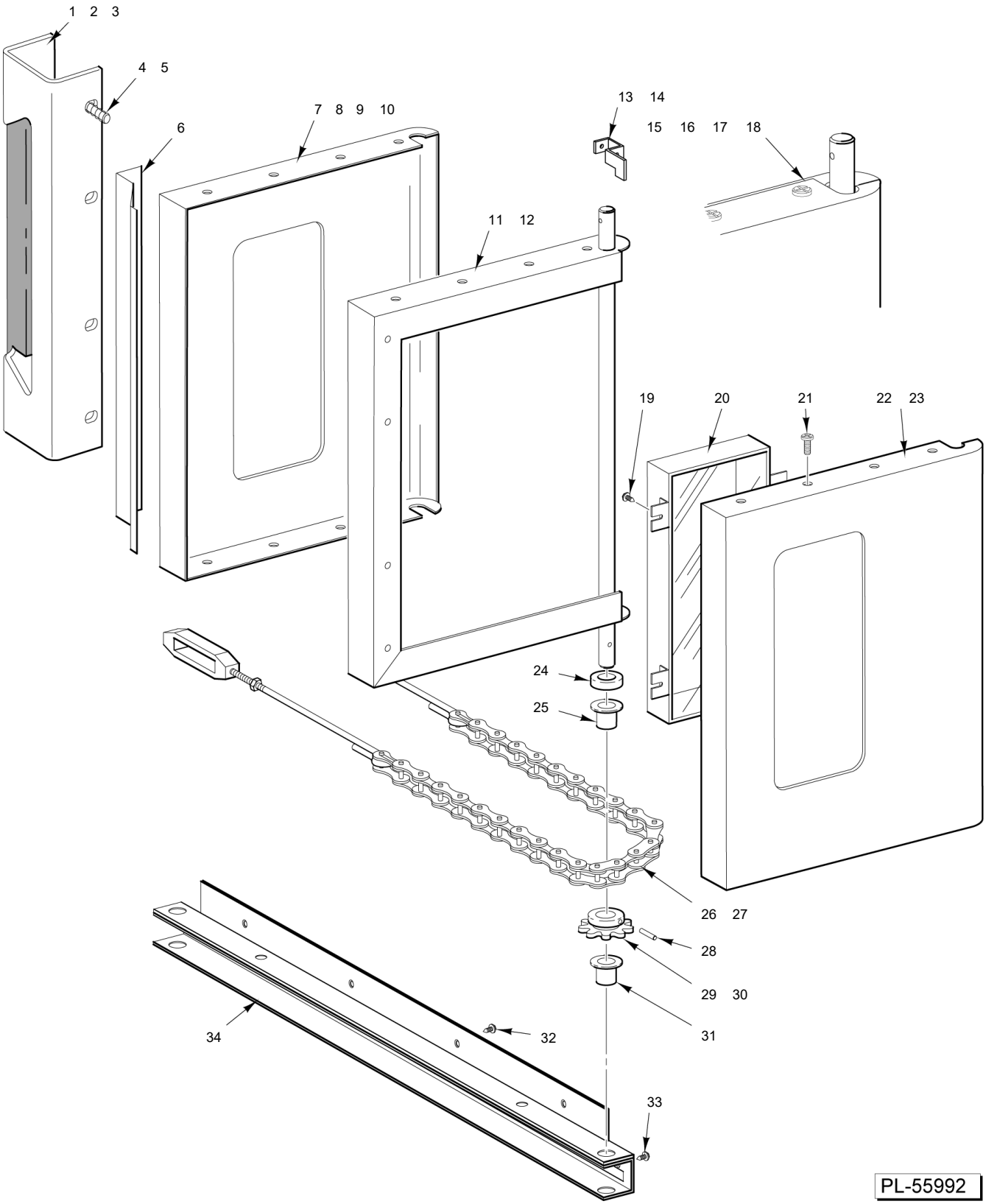

SIMULTANEOUSLY OPENING DOORS
(BEFORE S/N 481907146)

SIMULTANEOUSLY OPENING DOORS
(BEFORE S/N 481907146)

ILLUS. PL-55992	PART NO.	NAME OF PART	AMT.
1	00-356562-00001	Handle - Door	1
2	00-421923-000G1	Grip - Set	1
3	SC-113-98	Mach. Screw 10-24 x 1/2 Slotted Hex Washer Hd.	3
4	SC-041-01	Cap Screw 1/4-20 x 3/4 Hex Hd. (SST)	4
5	WL-019-18	Lockwasher 1/4 Light	4
6	00-356550-00001	Latch - Friction	1
7	00-421913-00002	Panel - Outer Door (RH) (W/O Window)	1
8	00-421913-00003	Panel - Outer Door (LH) (W/Window)	1
9	00-421913-00001	Panel - Outer Door (RH) (W/Window)	1
10	00-421913-00004	Panel - Outer Door (LH) (W/O Window)	1
11	00-421904-000G3	Frame Assy. - Chain Door (LH)	1
12	00-421905-000G2	Frame Assy. - Door (RH)	1
13	00-424163-00001	Lever - Door Switch	1
14	SD-034-52	Self-Tapping Screw 8-32 x 1 Slotted. Hex Washer Hd., Type T	1
15	00-424730-00001	Door Assy. (LH) (W/Window)	1
16	00-424730-00002	Door Assy. (LH) (W/O Window)	1
17	00-424731-00001	Door Assy. (RH) (W/Window)	1
18	00-424731-00002	Door Assy. (RH) (W/O Window)	1
19	SD-034-62	Self-Tapping Screw 10-32 x 1/2 Slotted. Hex Washer Hd., Type T	4
20	00-358534-00001	Window Assy.	1
21	SD-034-22	Self-Tapping Screw 10-16 x 5/8 Phil. Truss Hd., Type AB	9
22	00-358532-00001	Panel - Inner Door (W/Window)	1
23	00-358533-00003	Panel - Inner Door (W/O Window)	1
24	00-343143-00002	Washer	2
25	00-347080-00002	Bearing - Door Shaft	2
26	00-343608-00002	Door Chain & Turnbuckle Assy.	2
27	00-352667-00001	Cable - Door Stop	1
28	PS-004-11	Spirol Pin 3/16 x 1-1/4 Heavy	2
29	00-342166-00001	Sprocket - Door Shaft	2
30	SC-047-28	Set Screw 1/4-28 x 3/8 Hex Hdls., Cup Pt.	2
31	00-347080-00002	Bearing - Door Shaft	2
32	SC-022-40	Mach. Screw 1/4-20 x 3/4 Phil. Flat Hd. (SST)	4
33	SC-113-90	Mach. Screw 1/4-20 x 3/4 Slotted Hex Washer Hd.	2
34	00-357846-00001	Channel - Door Sill Weldment	1

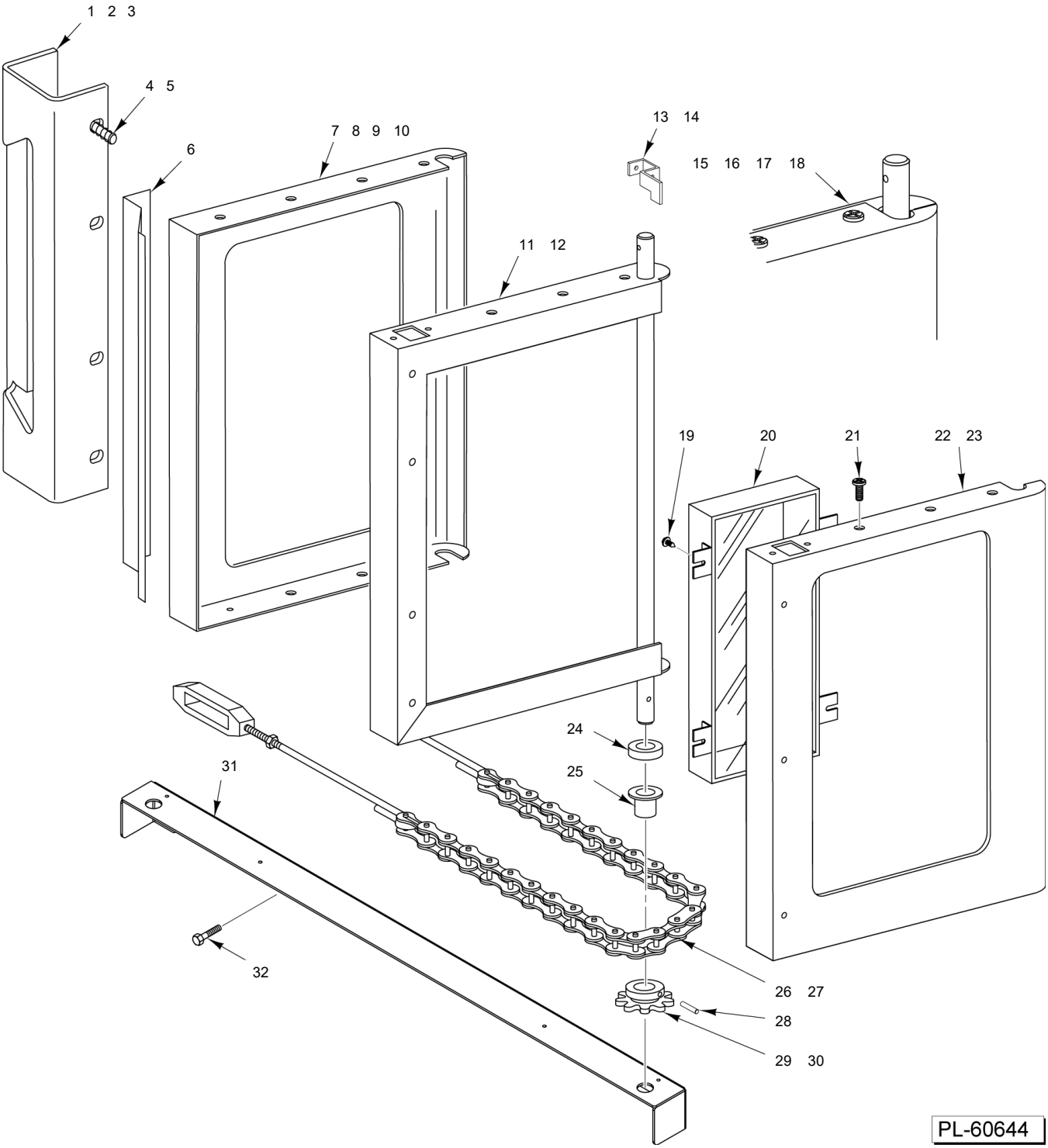

SIMULTANEOUSLY OPENING DOORS

SIMULTANEOUSLY OPENING DOORS

ILLUS. PL-60644	PART NO.	NAME OF PART	AMT.
1	00-356562-00001	Handle - Door	1
2	00-421923-000G1	Grip - Set	1
3	SC-113-98	Mach. Screw 10-24 x 1/2 Slotted Hex Washer Hd.	3
4	SC-041-01	Cap Screw 1/4-20 x 3/4 Hex Hd. (SST)	4
5	WL-019-18	Lockwasher 1/4 Light	4
6	00-356550-00001	Latch - Friction	1
7	00-421913-00002	Panel - Outer Door (RH) (W/O Window)	1
8	00-421913-00003	Panel - Outer Door (LH) (W/Window)	1
9	00-421913-00001	Panel - Outer Door (RH) (W/Window)	1
10	00-421913-00004	Panel - Outer Door (LH) (W/O Window)	1
11	00-421904-000G3	Frame Assy. - Chain Door (LH)	1
12	00-421905-000G2	Frame Assy. - Door (RH)	1
13	00-424163-00001	Lever - Door Switch	1
14	SD-034-52	Self-Tapping Screw 8-32 x 1 Slotted. Hex Washer Hd., Type T	1
15	00-499289-000G1	Door Assy. (LH) (W/Window)	1
16	00-499289-000G2	Door Assy. (LH) (W/O Window)	1
17	00-499290-000G1	Door Assy. (RH) (W/Window)	1
18	00-499290-000G2	Door Assy. (RH) (W/O Window)	1
19	SD-034-62	Self-Tapping Screw 10-32 x 1/2 Slotted. Hex Washer Hd., Type T	4
20	00-358534-00001	Window Assy.	1
21	SD-034-22	Self-Tapping Screw 10-16 x 5/8 Phil. Truss Hd., Type AB	9
22	00-358532-00001	Panel - Inner Door (W/Window)	1
23	00-358533-00003	Panel - Inner Door (W/O Window)	1
24	00-343143-00002	Washer	2
25	00-347080-00002	Bearing - Door Shaft	2
26	00-343608-00002	Door Chain & Turnbuckle Assy.	2
27	00-352667-00001	Cable - Door Stop	1
28	PS-004-11	Spirol Pin 3/16 x 1-1/4 Heavy	2
29	00-342166-00001	Sprocket - Door Shaft	2
30	SC-047-28	Set Screw 1/4-28 x 3/8 Hex Hdls., Cup Pt.	2
31	00-961294-00001	Support - Lower Door	1
32	00-922154	Screw 1/4-20 x 1 Hex Hd.	4

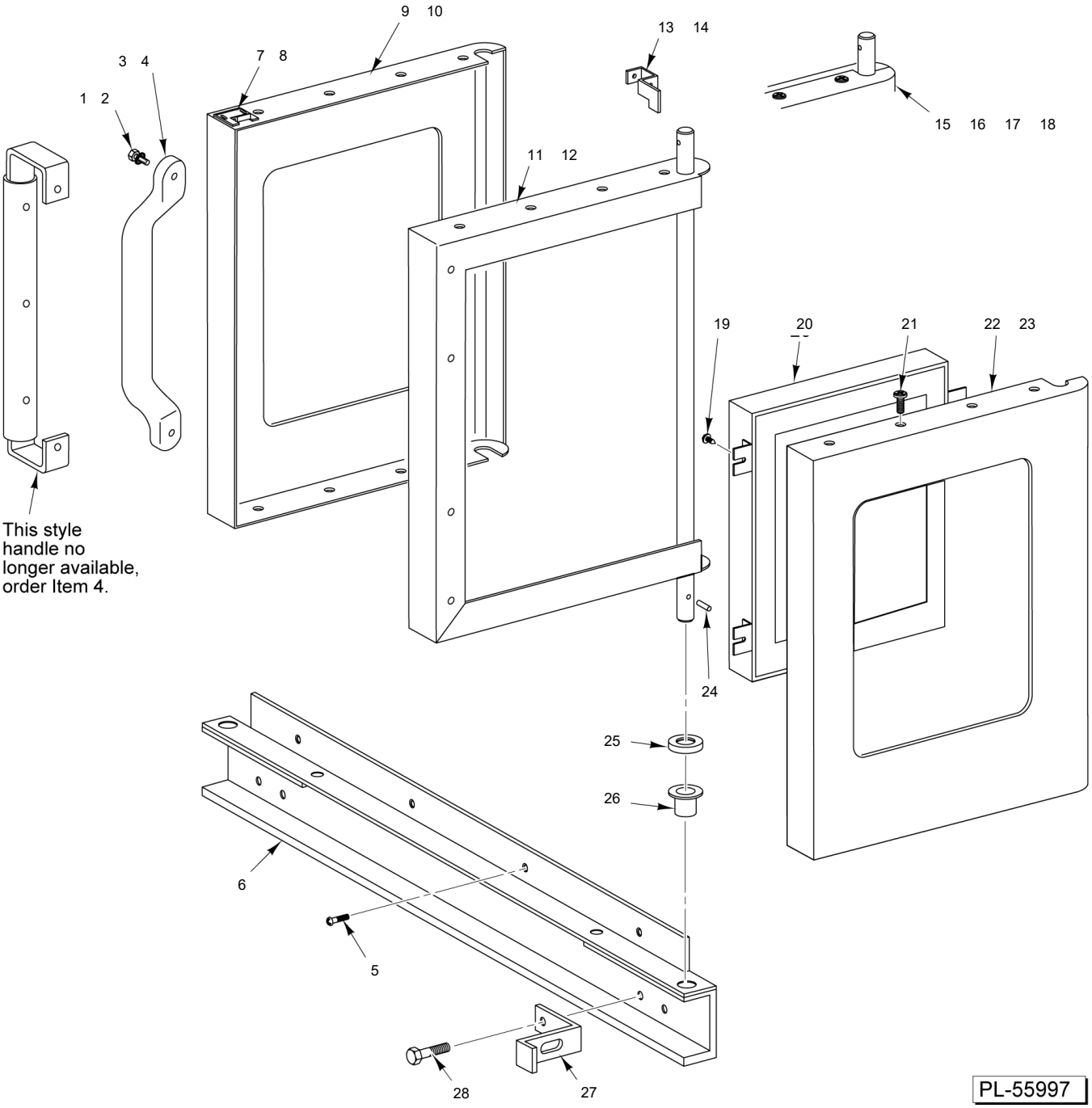

INDEPENDENTLY OPENING DOORS (BEFORE S/N 481908857)

INDEPENDENTLY OPENING DOORS
(BEFORE S/N 481908857)

ILLUS. PL-55997	PART NO.	NAME OF PART	AMT.
1	00-959087-00001	Screw 1/4-20 x 1-1/4 Black Hd.	2
2	WL-013-14	Lockwasher 1/4 Internal Shakeproof (SST)	2
3	00-957108-00001	Handle - Molded (Black)	1
4	00-913102-00179	Kit - Handle	1
5	SC-022-40	Mach. Screw 1/4-20 x 3/4 Phil. Flat Hd. (SST)	4
6	00-357846-00001	Channel - Door Sill Weldment	1
7	00-423847-00001	Strike - Door	1
8	SD-034-22	Self-Tapping Screw 10-16 x 5/8 Phil. Truss Hd., Type AB	2
9	00-358600-00001	Panel - Outer Door (W/Window)	1
10	00-358600-00002	Panel - Outer Door (W/O Window)	1
11	00-421905-000G1	Frame Assy. - Chain Door (RH)	1
12	00-421904-000G2	Frame Assy. - Door (LH)	1
13	00-424163-00001	Lever - Door Switch	1
14	SD-034-52	Self-Tapping Screw 8-32 x 1 Slotted. Hex Washer Hd., Type T	1
15	00-358529-00005	Door Assy. (LH) (W/Window)	1
16	00-358529-00006	Door Assy. (LH) (W/O Window)	1
17	00-358530-00003	Door Assy. (RH) (W/Window)	1
18	00-358530-00004	Door Assy. (RH) (W/O Window)	1
19	SD-034-62	Self-Tapping Screw 10-32 x 1/2 Slotted. Hex Washer Hd., Type T	4
20	00-358534-00001	Window Assy.	1
21	SD-034-22	Self-Tapping Screw 10-16 x 5/8 Phil. Truss Hd., Type AB	8
22	00-358532-00001	Panel - Inner Door (W/Window)	1
23	00-358533-00003	Panel - Inner Door (W/O Window)	1
24	PS-004-11	Spirol Pin 3/16 x 1-1/4 Heavy	1
25	00-343143-00002	Washer	2
26	00-347080-00002	Bearing - Door Shaft	1
27	00-424158-00001	Door Stop	1
28	SC-113-90	Mach. Screw 1/4-20 x 3/4 Slotted Hex Washer Hd.	2

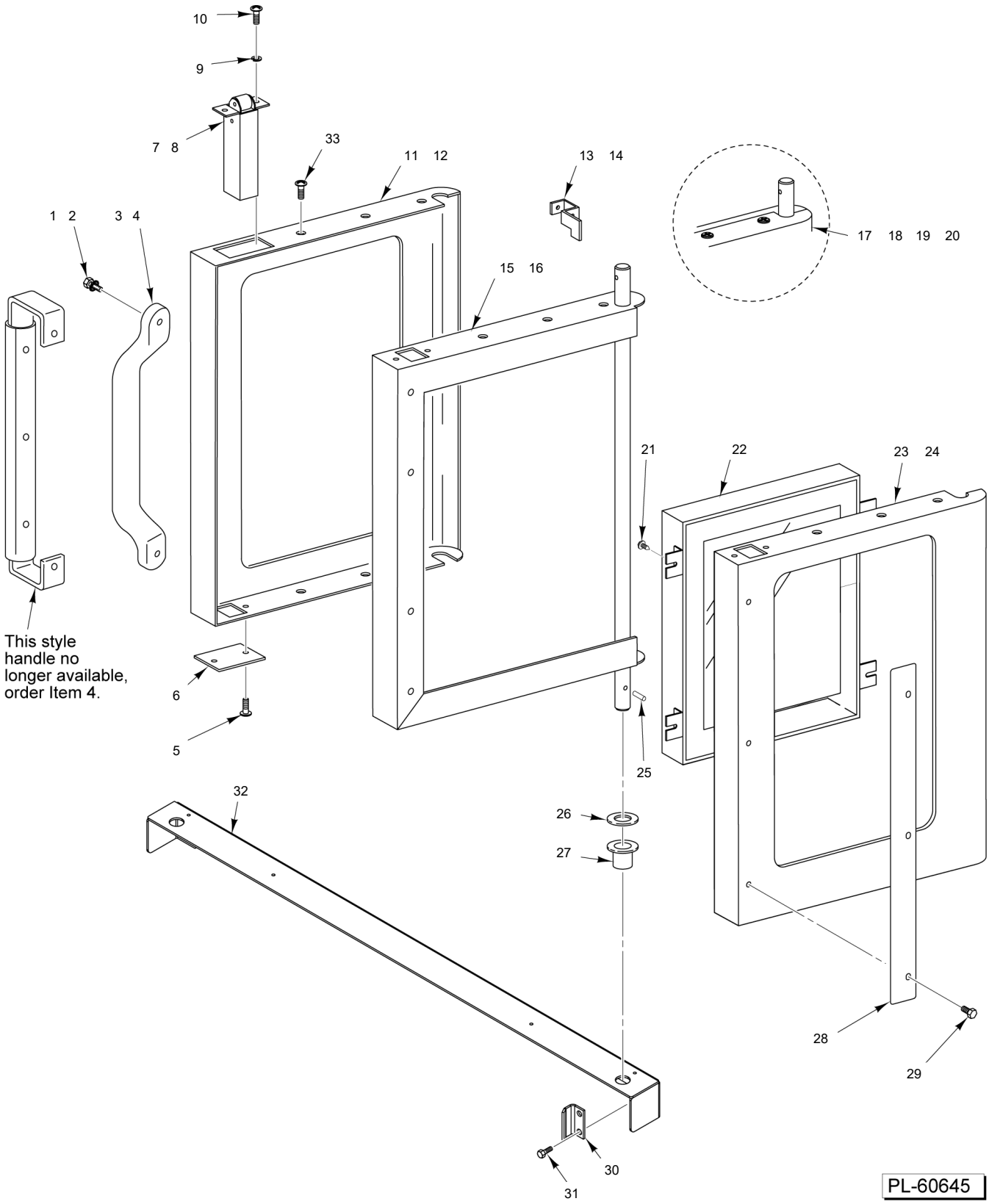

INDEPENDENTLY OPENING DOORS (STARTING S/N 481908857)

INDEPENDENTLY OPENING DOORS
(STARTING S/N 481908857)

ILLUS. PL-60645	PART NO.	NAME OF PART	AMT.
1	00-959087-00001	Screw 1/4-20 x 1-1/4 Black Hd.	2
2	WL-013-14	Lockwasher 1/4 Internal Shakeproof (SST)	2
3	00-957108-00001	Handle - Molded (Black)	1
4	00-913102-00179	Kit - Handle	1
5	SD-034-22	Self-Tapping Screw 10-16 x 5/8 Phil. Truss Hd., Type AB	2
6	00-499264-00001	Plate - Latch Cutout	1
7	00-497586-00001	Latch - Door Roller	1
8	00-347545-00001	Catch Assy. - Door (Ball Style) (Not Shown)	1
9	WL-013-11	Lockwasher #10 Internal Shakeproof (SST)	2
10	SC-117-73	Mach. Screw 10-32 x 5/8 Phil. Truss Hd.	2
11	00-358600-00001	Panel - Outer Door (W/Window)	1
12	00-358600-00002	Panel - Outer Door (W/O Window)	1
13	00-424163-00001	Lever - Door Switch	1
14	SD-034-52	Self-Tapping Screw 8-32 x 1 Slotted. Hex Washer Hd., Type T	1
15	00-421905-000G1	Frame Assy. - Chain Door (RH)	1
16	00-421904-000G2	Frame Assy. - Door (LH)	1
17	00-499285-000G1	Door Assy. (LH) (W/Window)	1
18	00-499285-000G2	Door Assy. (LH) (W/O Window)	1
19	00-499286-000G1	Door Assy. (RH) (W/Window)	1
20	00-499286-000G2	Door Assy. (RH) (W/O Window)	1
21	SD-034-62	Self-Tapping Screw 10-32 x 1/2 Slotted. Hex Washer Hd., Type T	4
22	00-358534-00001	Window Assy.	1
23	00-358532-00001	Panel - Inner Door (W/Window)	1
24	00-358533-00003	Panel - Inner Door (W/O Window)	1
25	PS-004-11	Spirol Pin 3/16 x 1-1/4 Heavy	1
26	00-343143-00002	Washer	2
27	00-347080-00002	Bearing - Door Shaft	1
28	00-357837-00001	Seal - Door End	1
29	SD-034-22	Self-Tapping Screw 10-16 x 5/8 Phil. Truss Hd., Type AB	3
30	00-961535-00001	Stop - Door	1
31	00-922154	Screw 1/4-20 x 1 Hex Hd.	6
32	00-961294-00001	Support - Lower Door	1
33	SD-034-22	Self-Tapping Screw 10-16 x 5/8 Phil. Truss Hd., Type AB	2

40	00-427617-00001	Flue - Deflector	48	00-343634-00002	Caster
41	00-959663-00001	Tube - Snorkel Assy.	49	00-357047-00001	Caster - Swivel
42	00-402558-00004	Clip - Bulb	50	00-357047-00002	Caster - Swivel
43	00-424172-00001	Leg – Set (PTD)	51	00-417063-00001	Strap
44	00-424172-00002	Leg – Set (SST)	52	00-357093-00001	Ring - Locking
45	00-424157-000G7	Leg (PTD)	53	00-288946-00002	Foot
46	00-342150-00005	Leg (For Double Stack)	54	SC-113-76	Screw
47	00-343634-00001	Caster	55	00-425428-00001	Foot (Adjustable)

PARTS NOT ILLUSTRATED

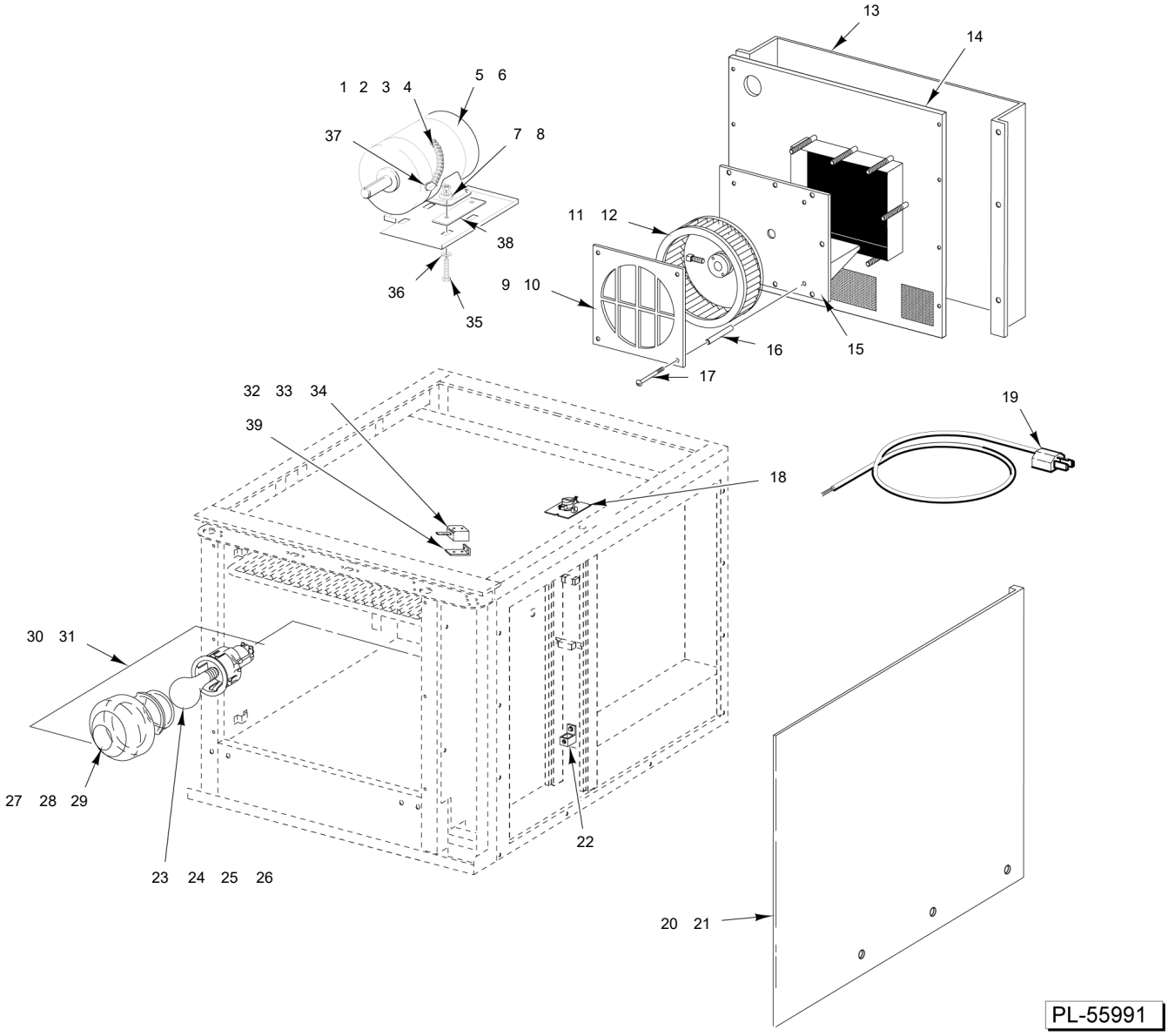

OVEN PANELS & MOTOR
(PREVIOUS CONSTRUCTION)
(BEFORE 3-19-18)

OVEN PANELS & MOTOR
(PREVIOUS CONSTRUCTION)
(BEFORE 3-19-18)

ILLUS.	PART NO.	NAME OF PART	AMT.
PL-23051			
1	FE-006-05	Lock Nut 1/2	1
2	00-414540-00B35	Conduit 3/8 x 35 In. Lg.	1
3	00-342285-00001	Bushing - Plastic	2
4	FE-002-03	Connector - Conduit 3/8 TS Straight	1
5	00-913102-00333	Kit, Blower / Motor, 120V, Full Size Includes Motor, Blower Wheel, Mounting Bracket	1
6	00-913102-00347	Kit, Blower / Motor, 240V, Full Size Includes Motor, Blower Wheel, Mounting Bracket	1
7	WS-029-46	Washer	4
8	NS-046-86	Nut Assy. 5/16-18 KEPS Hex	4
9	00-411136-00003	Cover - Fan (50 Hz.)	1
10	00-411136-00004	Cover - Fan (60 Hz.)	1
11	00-415780-00003	Wheel - Blower (60 Hz.)	1
12	00-415780-00005	Wheel - Blower (50 Hz.)	1
13	00-424840-00002	Panel - Back (SST) (Optional)	1
14		Not Available for Service	1
15	00-423289-000G1	Motor Mount	1
16	00-411289-00004	Spacer - Fan Housing	4
17	SC-120-15	Mach. Screw 1/4-20 x 4 Rd. Hd.	4
18	00-958827-000G3	Kit - Oven Limit Assy.	1
19	00-405016-00001	Cord - Electric Supply (120 V. Only)	1
20	00-424140-00002	Panel - Outer (RH) (SST) (VC4G)	1
21	00-424228-00002	Panel - Outer (RH) (SST) (VC6G)	1
22	00-417856-00001	Lug - Grounding (With Set Screw)	1
23	01-1000V7-00028	Bulb (120 V.) (Previous Construction)	1
24	01-1000V7-00053	Lamp - Oven (Complete) (Lens, Base, & Bulb) (Current Construction)	1
25	00-342766-00002	Light Bulb - Oven (40 Watts) (240 V.) (Previous Construction)	1
26	00-913102-00032	Kit - Lamp & Housing (250 V.) (Current Construction)	1
27	00-423832-00001	Cover - Lamp Electrical	2
28	01-1000V7-00054	Bulb - Halogen G9 Base (Current Construction)	1
29	00-357036-00003	Lens - Lamp	1
30	00-357036-00001	Oven Lamp (40 Watts) (120-130 V.)	2
31	00-913102-00032	Kit - Lamp & Housing (250 V.)	2
32	00-411496-000F1	Switch - Micro (Door)	1
33	00-499310-000G1	Micro Switch Kit (Incls. Items 32, 34,& 39)	1
34	SD-034-47	Self-Tapping Screw 6-32 x 1 Slotted. Hex Washer Hd., Type T	2
35	SC-113-65	Cap Screw 5/16-18 x 1-1/4 Hex Hd.	4
36	WS-029-46	Washer	4
37	FE-002-52	Connector - Conduit 3/8 TS 90 Degree	1
38	00-358723-00001	Spacer - Steel	2
39	00-425324-00001	Bracket - Door Switch	1
40	00-427617-00001	Flue - Deflector	1
41	00-959663-00001	Tube - Snorkel	1
42	00-402558-00004	Clip - Tubing	2
43	00-424172-00001	Leg - Set (25-3/4 In.) (PTD)	1
44	00-424172-00002	Leg - Set (25-3/4 In.) (SST)	1
45	00-424157-000G7	Leg Assembly for Caster and Foot (Painted Black)	4
46	00-342150-00005	Leg (8 In.) (Double Stack)	4
47	00-343634-00001	Caster (Swivel With Brake) (7.5 In.) (Double Stack)	2
48	00-343634-00002	Caster (Rigid) (7.5 In.)	2
49	00-357047-00001	Caster - Swivel (Without Brake)	2
50	00-357047-00002	Caster - Swivel (With Brake)	2
51	00-417063-00001	Strap - Tie Down	4
52	00-357093-00001	Ring - Locking (Use with Item 45)	4
53	00-288946-00002	Foot - Adjustable (1-5/8) (SST) (Use with Item 45)	4
54	SC-113-76	Cap Screw 1/4-20 x 1 Hex Hd. (Use with legs)	16
55	00-425428-00001	Foot - Adjustable (Use with Item 46)	4

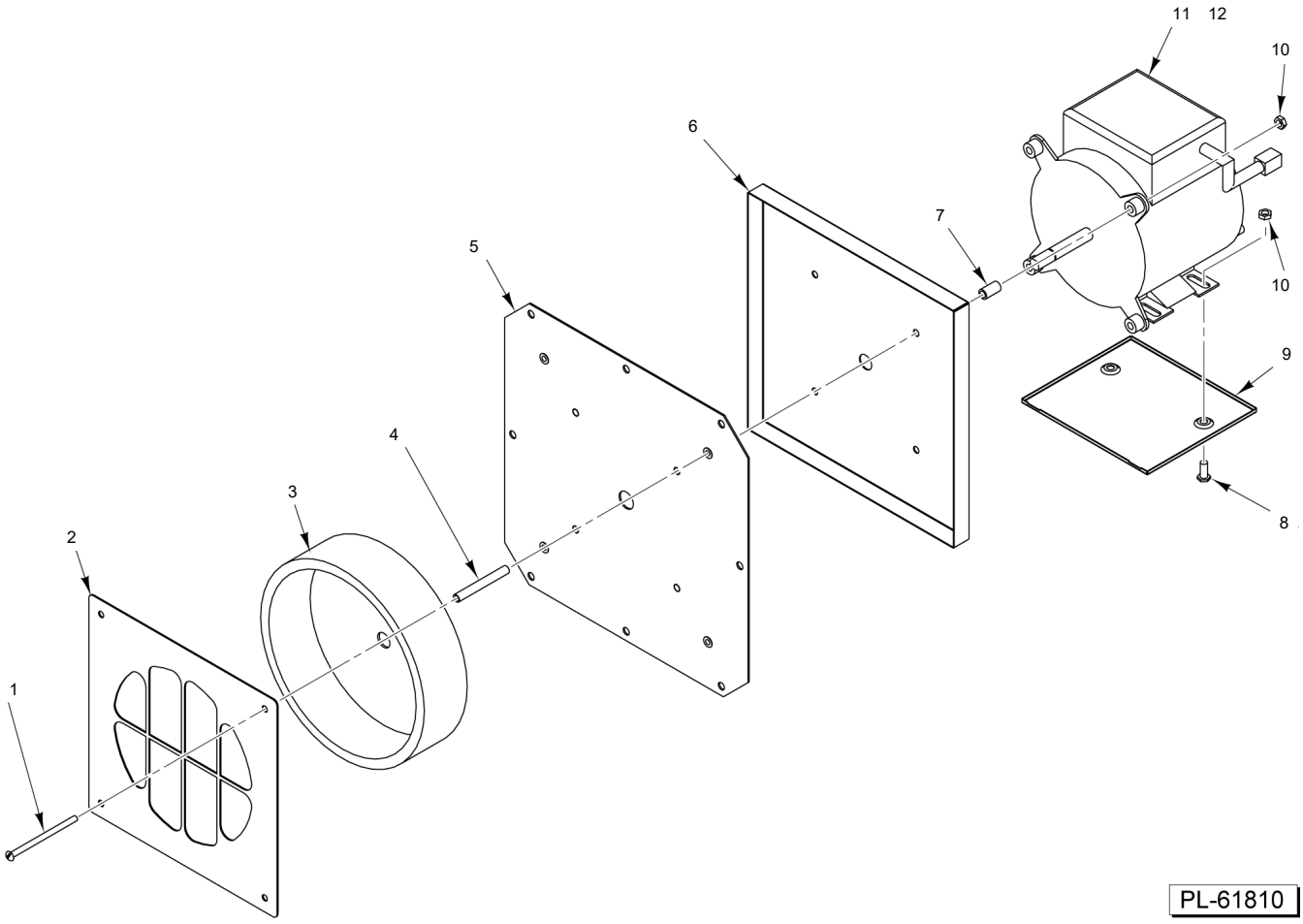

CONVECTION MOTOR
(AFTER 3-19-18)

CONVECTION MOTOR
(AFTER 3-19-18)

ILLUS. PL-61810	PART NO.	NAME OF PART	AMT.
1	SC-120-15	Mach. Screw 1/4-20 x 4 Rd. Hd.	4
2	00-411136-00004	Cover - Fan (60 Hz.)	1
3	00-415780-00003	Wheel - Blower (60 Hz.)	1
4	00-411289-00001	Spacer - Fan Housing (1/8 Pipe x 27/8)	4
5	00-962792-000G1	Motor Mount Assy.	1
6	00-962791-00001	Plate - Motor Mount	1
7	00-962793	Spacer - Motor	4
8	SC-037-75	Cap Screw 5/16-18 x 3/4 Hex Hd.	2
9	00-961831-00001	Pan - Drip, Motor	1
10	NS-046-86	Nut Assy. 5/16-18 KEPS Hex	6
11	00-961739-000G1	Motor, 120 VAC, 0.5 HP	1
12	00-961739-000G2	Motor, 208-240 VAC, 0.5 HP	1

14	00-427617-00001	Flue - Deflector	22	00-343634-00002	Caster
15	00-959663-00001	Tube - Snorkel Assy.	23	00-357047-00001	Caster - Swivel
16	00-402558-00004	Clip - Bulb	24	00-357047-00002	Caster - Swivel
17	00-424172-00001	Leg – Set (PTD)	25	00-417063-00001	Strap
18	00-424172-00002	Leg – Set (SST)	26	00-357093-00001	Ring - Locking
19	00-424157-000G7	Leg (PTD)	27	00-288946-00002	Foot
20	00-342150-00005	Leg (For Double Stack)	28	SC-113-76	Screw
21	00-343634-00001	Caster	29	00-425428-00001	Foot (Adjustable)

PARTS NOT ILLUSTRATED

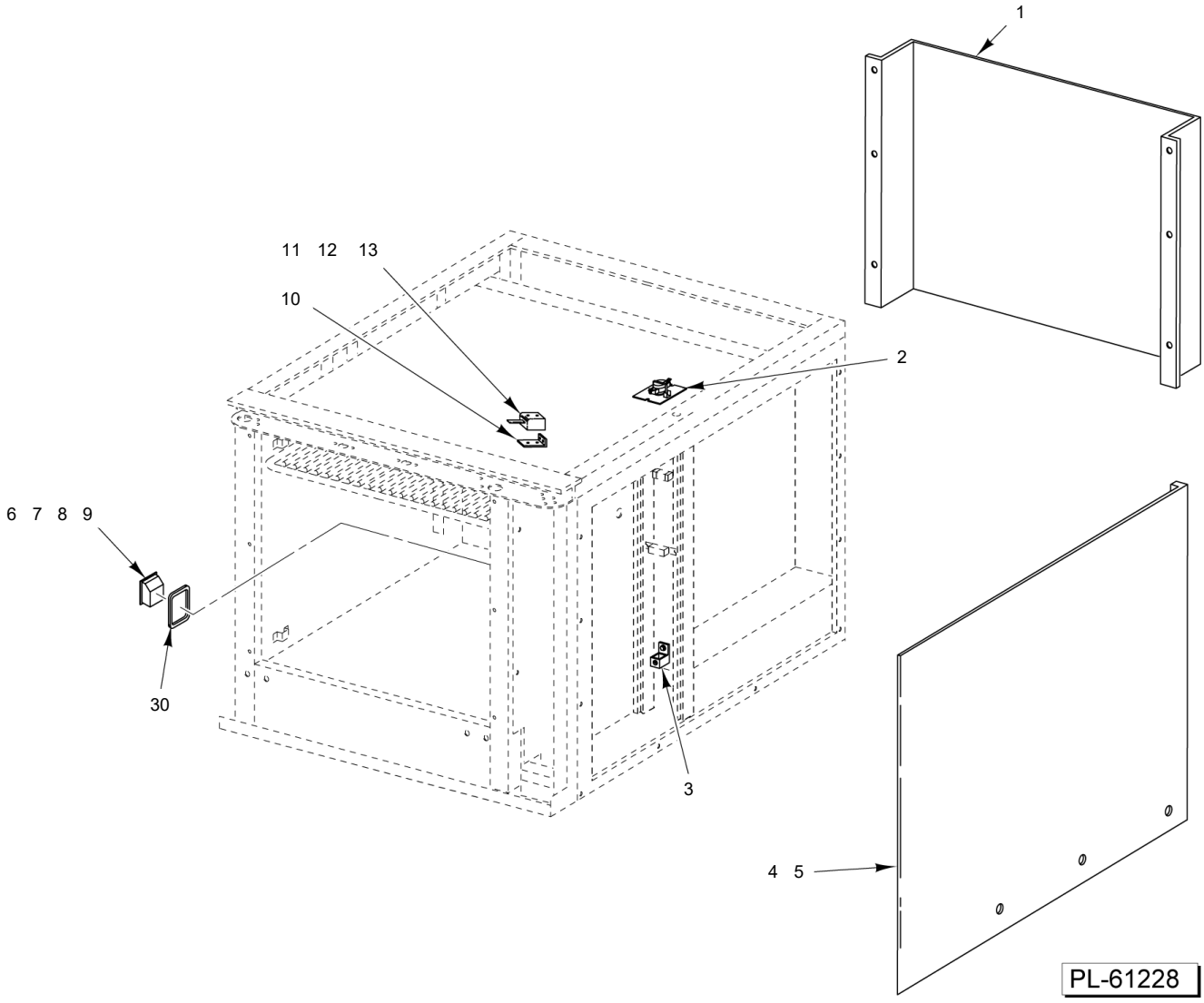

OVEN PANELS

OVEN PANELS

ILLUS. PL-61228	PART NO.	NAME OF PART	AMT.
1	00-424840-00002	Panel - Back (SST) (Optional)	1
2	00-958827-000G3	Kit - Oven Limit Assy.	1
3	00-417856-00001	Lug - Grounding (With Set Screw)	1
4	00-424140-00002	Panel - Outer (RH) (SST)	1
5	00-424228-00002	Panel - Outer (RH) (SST)	1
6	00-960194-00001	Oven Lamp (40W) (120 V.)	2
7	00-961766-00001	Oven Lamp (40W) (240 V.)	2
8	00-961291-00001	Bulb - Halogen (120 V.)	AR
9	00-961291-00002	Bulb - Halogen (230V) (240 V.)	AR
10	00-425324-00001	Bracket - Door Switch	1
11	00-411496-000F1	Switch - Micro (Door)	1
12	00-499310-000G1	Micro Switch Kit (Incls. Items 10, 11,& 13)	1
13	SD-034-47	Self-Tapping Screw 6-32 x 1 Slotted. Hex Washer Hd., Type T	2
14	00-427617-00001	Flue - Deflector	1
15	00-959663-00001	Tube - Snorkel	1
16	00-402558-00004	Clip - Tubing	2
17	00-424172-00001	Leg - Set (25-3/4 In.) (PTD)	1
18	00-424172-00002	Leg - Set (25-3/4 In.) (SST)	1
19	00-424157-000G7	Leg Assembly for Caster and Foot (Painted Black)	4
20	00-342150-00005	Leg (8 In.) (Double Stack)	4
21	00-343634-00001	Caster (Swivel With Brake) (7.5 In.) (Double Stack)	2
22	00-343634-00002	Caster (Rigid) (7.5 In.) (Double Stack)	2
23	00-357047-00001	Caster - Swivel (Without Brake)	2
24	00-357047-00002	Caster - Swivel (With Brake)	2
25	00-417063-00001	Strap - Tie Down	4
26	00-357093-00001	Ring - Locking (Use with Item 19)	4
27	00-288946-00002	Foot - Adjustable (1-5/8) (SST) (Use with Item 19)	4
28	SC-113-76	Cap Screw 1/4-20 x 1 Hex Hd. (Use with legs)	AR
29	00-425428-00001	Foot - Adjustable (Use with Item 20)	4
30	00-962843-000G1	Kit - Oven Light Gaskets	2

(BEFORE 1-22-18)

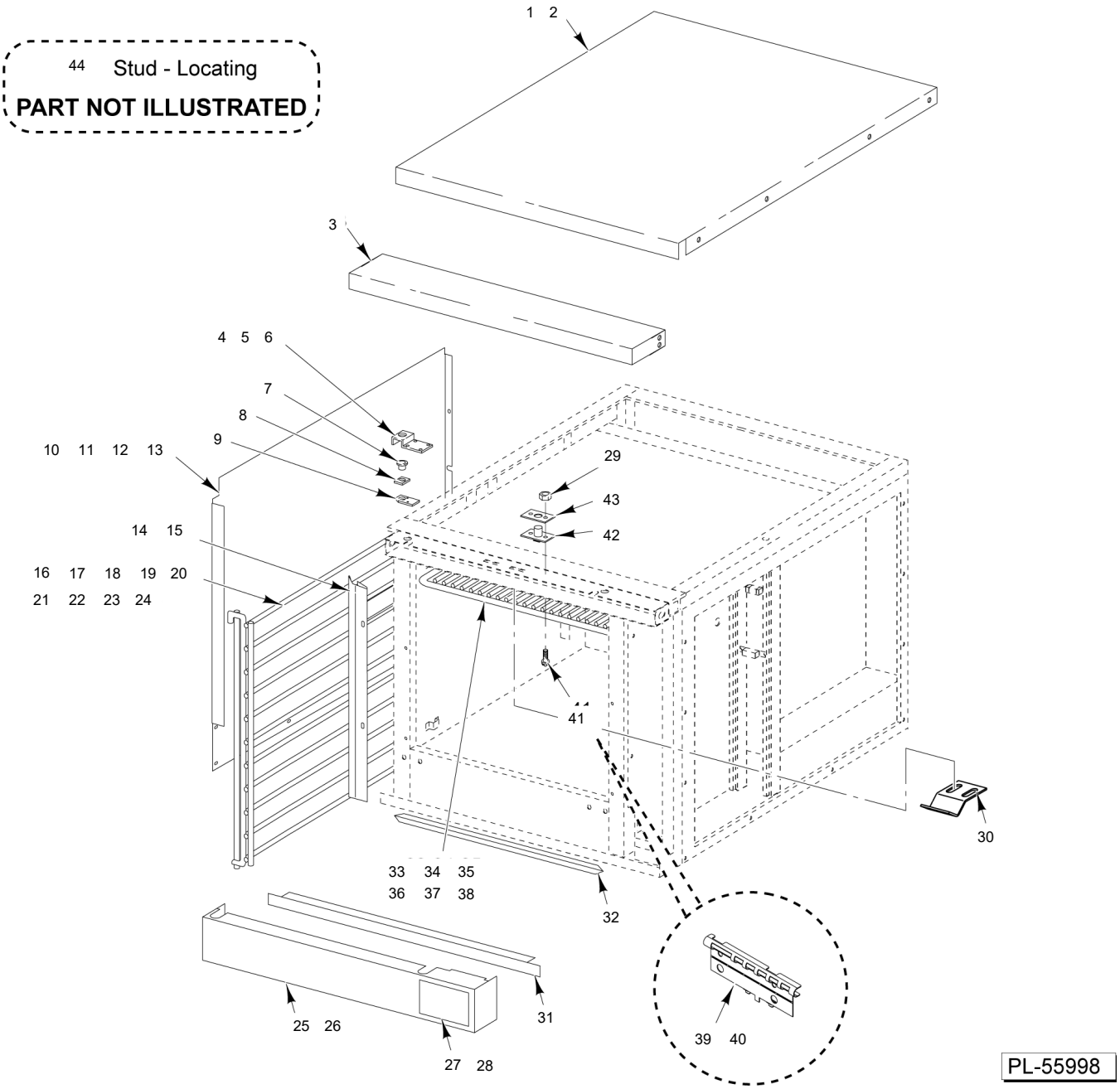

OVEN PANELS AND RACK SUPPORTS (PREVIOUS CONSTRUCTION)

OVEN PANELS AND RACK SUPPORTS (PREVIOUS CONSTRUCTION)

ILLUS. PL-55998	PART NO.	NAME OF PART	AMT.
1	00-424141-00002	Top (SST) (ML-126610, ML-126611, & ML-136494)	1
2	00-424229-00002	Top (SST) (ML-126612, ML-126613, & ML-136495)	1
3	00-961860-00001	Top - Front	1
4	00-353484-00001	Plate - Retainer	2
5	SC-053-41	Mach. Screw 1/4-20 x 1/2 Slotted Truss Hd. (SST)	4
6	NS-038-08	Lock Nut 1/4-20 Flange	4
7	00-347080-00002	Bearing - Door Shaft	2
8	00-353482-00001	Spacer	2
9	00-353483-00001	Plate - Upper Door Bearing	2
10	00-424142-00002	Panel - Outer (SST) (LH) (ML-126610, ML-126611, & ML-136494) (Previous Construction)	1
11	00-424230-00002	Panel - Outer (SST) (LH) (ML-126612, ML-126613, & ML-136495) (Previous Construction)	1
12	00-499302-00001	Side - Left Body (ML-126610, ML-126611, & ML-136494) (Current Construction)	1
13	00-499303-00001	Side - Left Body (ML-126612, ML-126613, & ML-136495) (Current Construction)	1
14	00-357919-00001	Kit - Door Seal (Incls. Items 15 & 32)	1
15	00-423842-000G1	Seal - Vertical Door (Set) (LH & RH)	1
16	00-428104-00001	Guide - Rack (LH) (ML-126610, ML-126611, & ML-136494) (Before S/N481809325)	1
17	00-428104-00002	Guide - Rack (RH) (ML-126610, ML-126611, & ML-136494) (Before S/N481809325)	1
18	00-428104-00003	Guide - Rack (LH) (ML-126612, ML-126613, & ML-136495) (Before S/N481809325)	1
19	00-428104-00004	Guide - Rack (RH) (ML-126612, ML-126613, & ML-136495) (Before S/N481809325)	1
20	00-342141-00001	Rack - Support (LH) (ML-126610, ML-126611, & ML-136494) (Previous Construction)	1
21	00-342141-00002	Rack - Support (RH) (ML-126610, ML-126611, & ML-136494) (Previous Construction)	1
22	00-424833-00001	Rack - Support (LH) (ML-126612, ML-126613, & ML-136495) (Previous Construction)	1
23	00-424833-00002	Rack - Support (RH) (ML-126612, ML-126613, & ML-136495) (Previous Construction)	1
24	00-959456-00001	Support - Rack Guide (LH & RH) (Starting S/N481809325)	2
25	00-961861-00002	Trim - Bottom W/O Access Door	1
26	00-961861-00003	Trim - Bottom W/ Access Door	1
27	00-961877-00001	Door - Access Trim	1
28	00-425199-00001	Fastener - Nylon (Push-In)	2
29	NS-038-03	Lock Nut 10-32 Flange (Previous Construction)	2
30	00-497585-00001	Plate - Strike (Current Construction)	1
31	00-424865-00001	Cover - Trim	1
32	00-357507-00001	Seal - Horizontal Door (30-1/2 In. Long) (Top & Bottom)	2
33	00-411265-00011	Rack Assy. (ML-126610, ML-126611, & ML-136494) (Single Center Cross Member)	AR
34	00-411265-00022	Rack Assy. (ML-126610, ML-126611, & ML-136494) (Two Cross Members) (Before S/N481809325)	AR
35	00-959523-00001	Rack Assy. (ML-126610, ML-126611, & ML-136494) (Starting S/N481809554)	AR
36	00-411265-00010	Rack Assy. (ML-126612, ML-126613, & ML-136495)(Single Center Cross Member) (Used Before 9/09)	AR
37	00-411265-00020	Rack Assy. (ML-126612, ML-126613, & ML-136495) (Two Cross Members) (Used from 9/09 to S/N481809325)	AR
38	00-959523-00002	Rack Assy. (ML-126612, ML-126613, & ML-136495) (Starting S/N481809554)	AR
39	00-959753-00001	Probe Guard & Retainer	1
40	SD-032-07	Self-Tapping Screw 10-24 x 1/2 Hex. Hex Washer Hd., Type TT	2
41	SC-115-51	Mach. Screw 10-32 x 1/2 Phil. Truss Hd.	2
42	00-347545-00001	Catch Assy. - Door (Previous Construction)	1
43	00-423848-00001	Shim - Door Strike (Previous Construction)	AR
44	00-339337-00001	Stud - Locating	2

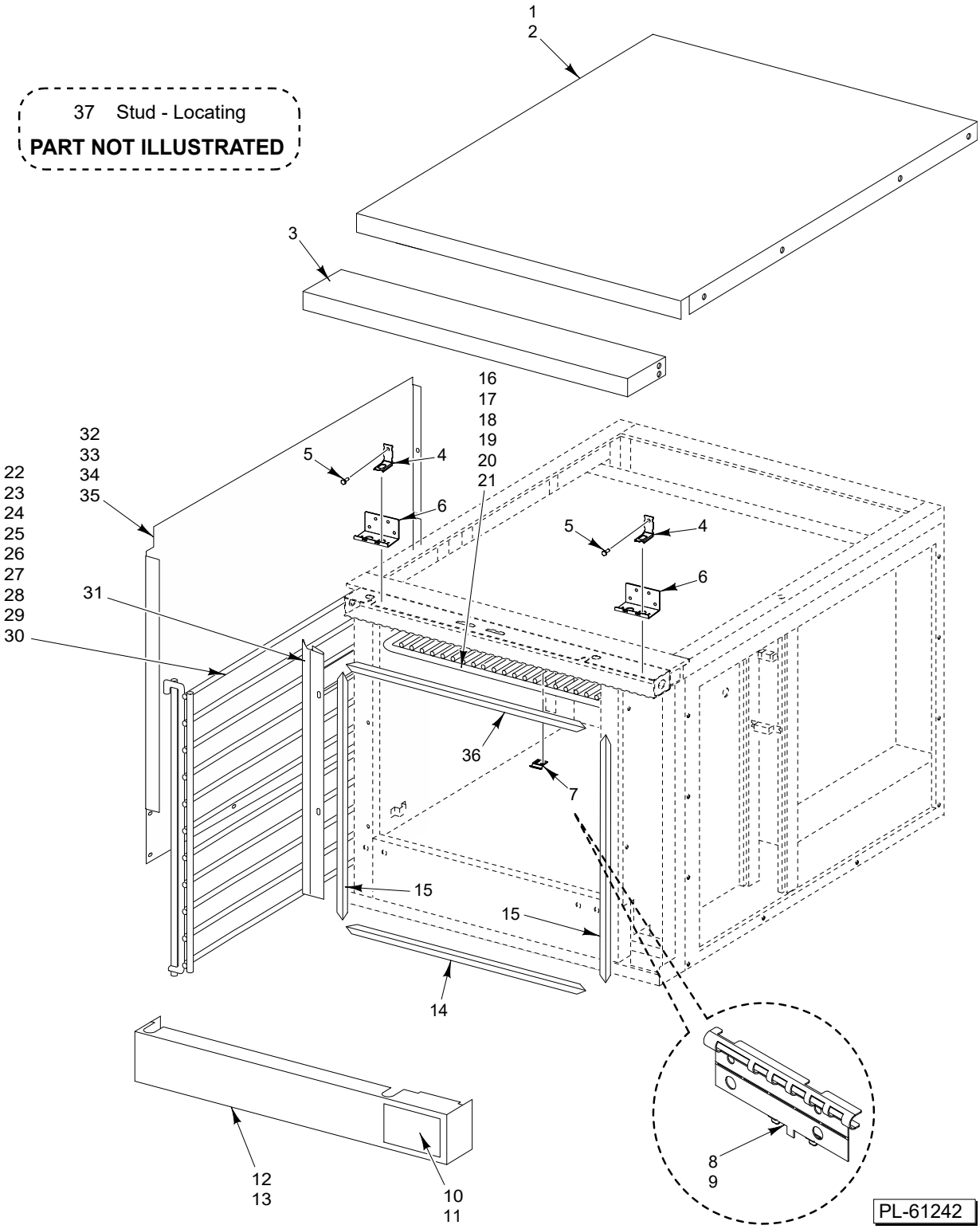

OVEN PANELS AND RACK SUPPORTS
(CURRENT CONSTRUCTION)

OVEN PANELS AND RACK SUPPORTS
(CURRENT CONSTRUCTION)

ILLUS. PL-61242	PART NO.	NAME OF PART	AMT.
1	00-424141-00002	Top (SST)	1
2	00-424229-00002	Top (SST)	1
3	00-961860-00001	Top - Front	1
4	00-961587-00001	Clip - Hold Down	2
5	00-922154	Screw 1/4-20 x 1 Hex Hd.	9
6	00-961656-00001	Support - Door (Upper)	2
7	00-497585-00001	Plate - Strike	1
8	00-959753-00001	Probe Guard & Retainer	1
9	SD-032-07	Self-Tapping Screw 10-24 x 1/2 Hex. Hex Washer Hd., Type TT	2
10	00-961877-00001	Door - Access Trim	1
11	00-425199-00001	Fastener - Nylon (Push-In)	2
12	00-961861-00002	Trim - Bottom W/O Access Door	1
13	00-961861-00003	Trim - Bottom W/ Access Door	1
14	00-959772-00001	Seal - Door (Bottom)	1
15	00-959771-00001	Seal - Door (Side)	2
16	00-411265-00011	Rack Assy.	AR
17	00-411265-00022	Rack Assy.	AR
18	00-959523-00001	Rack Assy.	AR
19	00-411265-00010	Rack Assy.	AR
20	00-411265-00020	Rack Assy.	AR
21	00-959523-00002	Rack Assy.	AR
22	00-428104-00001	Guide - Rack (LH)	1
23	00-428104-00002	Guide - Rack (RH)	1
24	00-428104-00003	Guide - Rack (LH)	1
25	00-428104-00004	Guide - Rack (RH)	1
26	00-342141-00001	Rack - Support (LH)	1
27	00-342141-00002	Rack - Support (RH)	1
28	00-424833-00001	Rack - Support (LH)	1
29	00-424833-00002	Rack - Support (RH)	1
30	00-959456-00001	Support - Rack Guide (LH & RH)	2
31	00-423842-000G1	Seal - Vertical Door (Set) (LH & RH)	1
32	00-424142-00002	Panel - Outer (SST) (LH)	1
33	00-424230-00002	Panel - Outer (SST) (LH)	1
34	00-499302-00001	Side - Left Body	1
35	00-499303-00001	Side - Left Body	1
36	00-959770-00001	Seal - Door (Top)	1
37	00-339337-00001	Stud - Locating	2

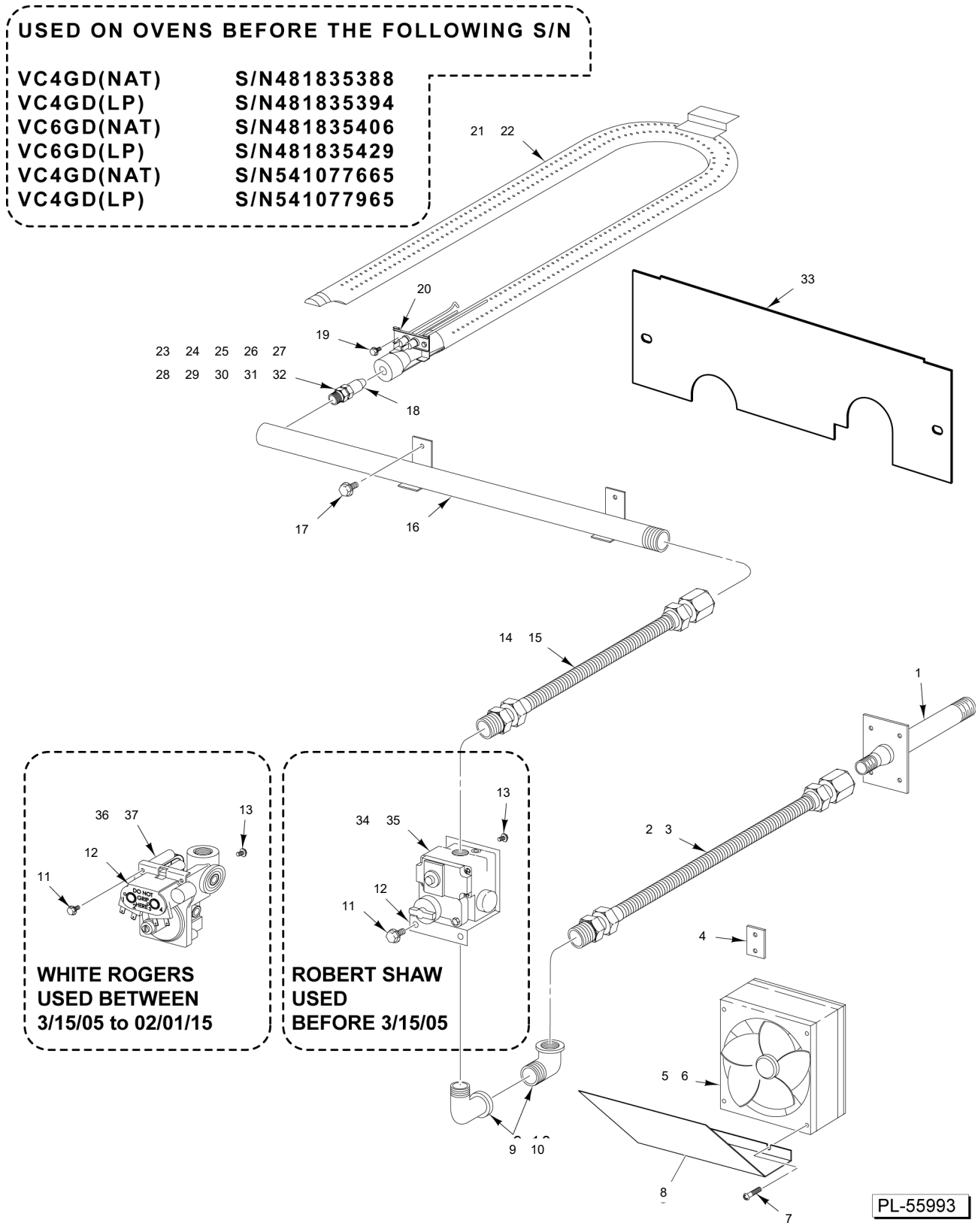

GAS PIPING AND FLAME CHAMBER (BEFORE SERIAL NUMBER)

GAS PIPING AND FLAME CHAMBER
(BEFORE SERIAL NUMBER)

ILLUS. PL-55993	PART NO.	NAME OF PART	AMT.
1	00-423819-00003	Pipe - Weldment Gas Inlet	1
2	00-423828-00001	Tube - Flex (30 In.) (1/2 Male End) (Used with Items 34 & 35)	1
3	00-423828-00006	Tube - Flex (30 In.) (3/8 Male End) (Used with Items 36 & 37)	1
4	00-425433-00001	Fan - Clip	1
5	00-424940-00001	Fan - Cooling (120 V.)	1
6	00-424940-00002	Fan - Cooling (230 V.)	1
7	SD-034-52	Self-Tapping Screw 8-32 x 1 Slotted. Hex Washer Hd., Type T	2
8	00-423820-00001	Deflector - Air	1
9	FP-013-17	Elbow - Street 1/2 x 90 Deg. (Used with Items 34 & 35)	2
10	FP-078-75	Elbow - Pipe 3/8 x 90 Deg. (Used with Items 36 & 37)	1
11	SC-113-80	Cap Screw 1/4-20 x 1/2 Hex Hd.	2
12	00-424728-00001	Bracket - Gas Valve	1
13	SC-117-60	Mach. Screw 10-32 x 1-1/4 Phil. Oval Hd	2
14	00-423828-00002	Tube - Flex (18 In.) (1/2 Male End) (Used with Items 34 & 35)	1
15	00-423828-00007	Tube - Flex (18 In.) (3/8 Male End) (Used with Items 36 & 37)	1
16	00-424138-00001	Manifold	1
17	SC-113-80	Cap Screw 1/4-20 x 1/2 Hex Hd.	2
18	00-417879-00001	Nozzle - Burner	1
19	SD-034-49	Self-Tapping Screw 8-32 x 1/2 Slotted. Hex Washer Hd., Type T	2
20	00-424194-00001	Ignitor - Flame Detector	1
21	00-424135-000G1	Burner Assy. (VC4G)	1
22	00-424195-000G1	Burner Assy. (VC6G)	1
23	00-010901-00031	Orifice - Spud (31 Drill) (NAT) (Sea Level to 2499 Ft.)	1
24	00-010901-00032	Orifice - Spud (32 Drill) (NAT) (2500 Ft. to 3499 Ft.)	1
25	00-010901-00033	Ofifice - Spud (33 Drill) (NAT) (3500 Ft. to 4499 Ft.)	1
26	00-010901-00034	Orifice - Spud (34 Drill) (NAT) (4500 Ft. to 6499 Ft.)	1
27	00-010901-00035	Orifice - Spud (35 Drill) (NAT) (6500 Ft. to 8499 Ft.)	1
28	00-010901-00036	Orifice - Spud (36 Drill) (NAT) (8500 Ft. to 10500 Ft.)	1
29	00-010901-00046	Orifice - Spud (46 Drill) (LP) (Sea Level to 2499 Ft.)	1
30	00-010901-00048	Orifice - Spud (48 Drill) (LP) (2500 Ft. to 4499 Ft.)	1
31	00-010901-00049	Orifice - Spud (49 Drill) (LP) (4500 Ft. to 7499 Ft.)	1
32	00-010901-00050	Orifice - Spud (50 Drill) (LP) (7500 Ft. to 10500 Ft.)	1
33	00-424191-000G1	Cover - Burner Access	1
34	00-410841-00018	Valve - Gas Control (NAT) (Robert Shaw) (Before February 2005)	1
35	00-410841-00019	Valve - Gas Control (LP) (Robert Shaw) (Before February 2005)	1
36	00-497269-00001	Valve - Gas Control (NAT) (White Rogers) (From February 2005 to February 2015)	1
37	00-497269-00002	Valve - Gas Control (LP) (White Rogers) (From February 2005 to February 2015)	1

USED ON OVENS AFTER THE FOLLOWING S/N

VC4GD(NAT)	**S/N481835388**
VC4GD(LP)	**S/N481835394**
VC6GD(NAT)	**S/N481835406**
VC6GD(LP)	**S/N481835429**
VC4GD(NAT)	**S/N541077665**
VC4GD(LP)	**S/N541077965**

33 00-412788-00048 Thermocouple 48"
34 00-497765-00002 Safety Valve
PARTS NOT ILLUSTRATED

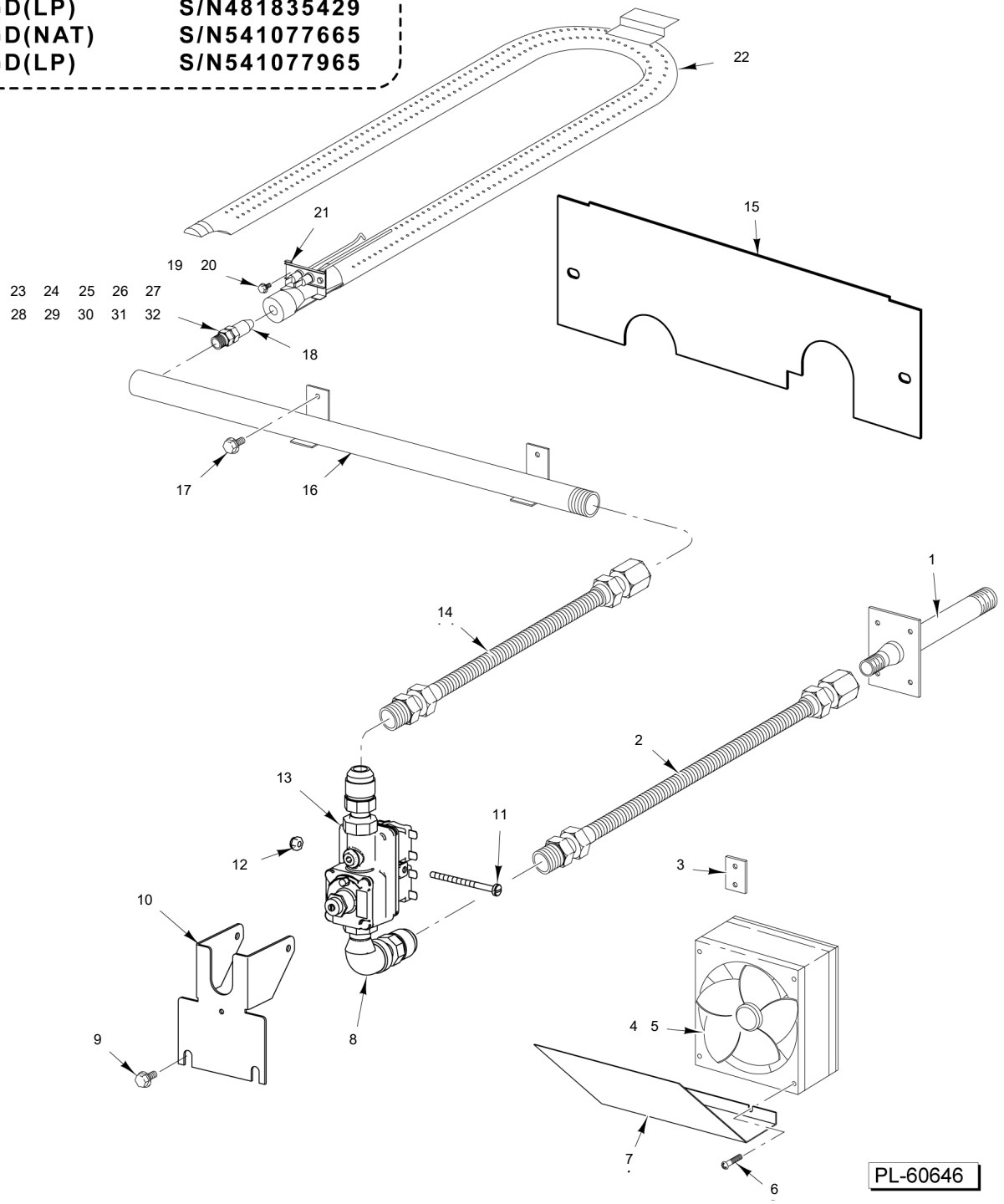

GAS PIPING AND FLAME CHAMBER

GAS PIPING AND FLAME CHAMBER

ILLUS. PL-60646	PART NO.	NAME OF PART	AMT.
1	00-423819-00003	Pipe - Weldment Gas Inlet	1
2	00-423828-00006	Tube - Flex (30 In.)	1
3	00-425433-00001	Fan - Clip	1
4	00-424940-00001	Fan - Cooling (120 V.)	1
5	00-424940-00002	Fan - Cooling (230 V.)	1
6	SD-034-52	Self-Tapping Screw 8-32 x 1 Slotted. Hex Washer Hd., Type T	2
7	00-423820-00001	Deflector - Air	1
8	FP-078-75	Elbow - Pipe 3/8 x 90 Deg.	1
9	SC-113-80	Cap Screw 1/4-20 x 1/2 Hex Hd.	2
10	00-959486-00001	Bracket - Gas Valve	1
11	SC-007-93	Mach. Screw 10-24 X 2-1/2 Slotted Rd. Hd.	1
12	NS-048-22	Lock Nut 10-24 Special	1
13	00-959662-00001	Valve - Combination Gas, Convertable (NAT & LP)	1
14	00-423828-00007	Tube - Flex (18 In.)	1
15	00-959379-00001	Cover - Burner Access, Mid	1
16	00-424138-00001	Manifold	1
17	SC-113-80	Cap Screw 1/4-20 x 1/2 Hex Hd.	2
18	00-417879-00001	Nozzle - Burner	1
19	SD-114-24	Mach. Screw 8-32 x 1/2 Phil. Pan Hd.	2
20	NS-044-07	Nut Assy. 8-32 Hex KEPS	2
21	00-959507-00001	Igniter - Burner	1
22	00-959508-00001	Burner	1
23	00-010901-00031	Orifice - Spud (31 Drill) (NAT) (Sea Level to 2499 Ft.)	1
24	00-010901-00032	Orifice - Spud (32 Drill) (NAT) (2500 Ft. to 3499 Ft.)	1
25	00-010901-00033	Ofifice - Spud (33 Drill) (NAT) (3500 Ft. to 4499 Ft.)	1
26	00-010901-00034	Orifice - Spud (34 Drill) (NAT) (4500 Ft. to 6499 Ft.)	1
27	00-010901-00035	Orifice - Spud (35 Drill) (NAT) (6500 Ft. to 8499 Ft.)	1
28	00-010901-00036	Orifice - Spud (36 Drill) (NAT) (8500 Ft. to 10500 Ft.)	1
29	00-010901-00046	Orifice - Spud (46 Drill) (LP) (Sea Level to 2499 Ft.)	1
30	00-010901-00048	Orifice - Spud (48 Drill) (LP) (2500 Ft. to 4499 Ft.)	1
31	00-010901-00049	Orifice - Spud (49 Drill) (LP) (4500 Ft. to 7499 Ft.)	1
32	00-010901-00050	Orifice - Spud (50 Drill) (LP) (7500 Ft. to 10500 Ft.)	1
33	00-412788-00048	Thermocouple 48"	1
34	00-497765-00002	Valve - Safety	1

24	00-408279-00020	Regulator (NAT)
25	00-408279-00021	Regulator (LP)

PARTS NOT ILLUSTRATED

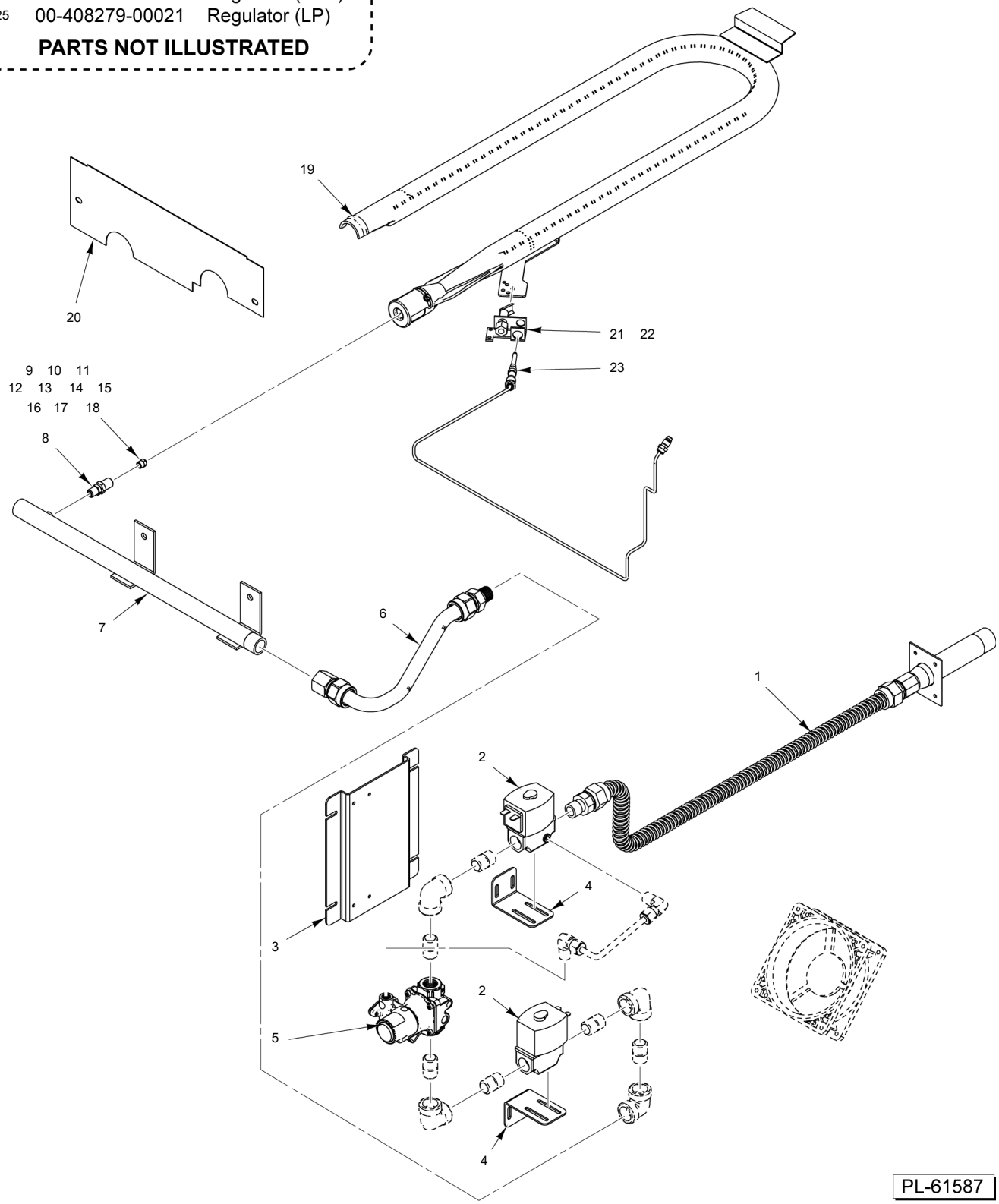

GAS PIPING AND FLAME CHAMBER (STANDING PILOT)

GAS PIPING AND FLAME CHAMBER (STANDING PILOT)

ILLUS. PL-61587	PART NO.	NAME OF PART	AMT.
1	00-961433-000G1	Inlet Pipe & Flex Tube Assy.	1
2	00-428045-00003	Valve - Solenoid	2
3	00-940102-000Y1	Bracket	1
4	00-940103-000Y1	Bracket	2
5	00-497765-00002	Valve - Safety	1
6	00-423828-00008	Tube - Flex (12 In.)	1
7	00-424138-00001	Manifold	1
8	00-417879-00001	Nozzle - Burner	1
9	00-010901-00031	Orifice - Spud (31 Drill) (NAT) (Sea Level to 2499 Ft.)	1
10	00-010901-00032	Orifice - Spud (32 Drill) (NAT) (2500 Ft. to 3499 Ft.)	1
11	00-010901-00033	Ofifice - Spud (33 Drill) (NAT) (3500 Ft. to 4499 Ft.)	1
12	00-010901-00034	Orifice - Spud (34 Drill) (NAT) (4500 Ft. to 6499 Ft.)	1
13	00-010901-00035	Orifice - Spud (35 Drill) (NAT) (6500 Ft. to 8499 Ft.)	1
14	00-010901-00036	Orifice - Spud (36 Drill) (NAT) (8500 Ft. to 10500 Ft.)	1
15	00-010901-00046	Orifice - Spud (46 Drill) (LP) (Sea Level to 2499 Ft.)	1
16	00-010901-00048	Orifice - Spud (48 Drill) (LP) (2500 Ft. to 4499 Ft.)	1
17	00-010901-00049	Orifice - Spud (49 Drill) (LP) (4500 Ft. to 7499 Ft.)	1
18	00-010901-00050	Orifice - Spud (50 Drill) (LP) (7500 Ft. to 10500 Ft.)	1
19	00-959508-00002	Burner	1
20	00-959379-00001	Cover - Burner Access, Mid	1
21	00-412787-00001	Pilot - Oven (NAT)	1
22	00-412787-00002	Pilot - Oven (LP)	1
23	00-412788-00048	Thermocouple 48"	1
24	00-408279-00020	Regulator - Pressure (NAT)	1
25	00-408279-00021	Regulator - Pressure 3/4 In. (LP)	1