SERVICE MANUAL



VC4E & VC6E Series Full Size Electric Convection Ovens

VC4ES	**ML-126743**
VC4ED	**ML-126744**
VC4EC	**ML-126745**
VC6ES	**ML-126746**
VC6ED	**ML-126747**
VC6EC	**ML-126748**

- NOTICE -

This Manual is prepared for the use of trained Hobart Service Technicians and should not be used by those not properly qualified.

This manual is not intended to be all encompassing. If you have not attended a Hobart Service School for this product, you should read, in its entirety, the repair procedure you wish to perform to determine if you have the necessary tools, instruments and skills required to perform the procedure. Procedures for which you do not have the necessary tools, instruments and skills should be performed by a trained Hobart Service Technician.

The reproduction, transfer, sale or other use of this manual, without the express written consent of Hobart, is prohibited.

This manual has been provided to you by ITW Food Equipment Group LLC ("ITW FEG") without charge and remains the property of ITW FEG, and by accepting this manual you agree that you will return it to ITW FEG promptly upon its request for such return at any time in the future.

TABLE OF CONTENTS

SERVICE UPDATES 4
SERVICE UPDATES - VC4E / VC6E 4
TIS DOCUMENT LIST - VC4E AND VC6E 4

GENERAL 6
INTRODUCTION 6
INSTALLATION, OPERATION AND CLEANING 6
OPERATION 6
CLEANING 6
LUBRICATION 6
TOOLS 6
SPECIFICATIONS 6

REMOVAL AND REPLACEMENT OF PARTS 8
COVERS AND PANELS 8
CONTROL PANEL COMPONENTS 9
COMPONENT PANEL COMPONENTS 9
TEMPERATURE PROBE (SOLID STATE CONTROL) 10
HEATING ELEMENTS ENDING AT SERIAL NUMBER 481916863 11
HEATING ELEMENTS 12
BLOWER AND MOTOR ENDING AT SERIAL NUMBER 481916863 14
BLOWER AND MOTOR 15
DOOR SWITCH 16
DOOR WINDOW 17
OVEN DOORS AND BEARINGS (INDEPENDENT DOORS) ENDING AT SERIAL NUMBER 481916782 17
OVEN DOORS (INDEPENDENT DOORS) STARTING AT SERIAL NUMBER 481916783 18
OVEN DOORS (SIMULTANEOUS DOORS) ENDING AT SERIAL NUMBER 481916783 19
OVEN DOORS (SIMULTANEOUS DOORS) 20
ROLLER LATCH ASSEMBLY (INDEPENDENT DOORS) 21
DOOR CATCH ROLLER ASSEMBLY (INDEPENDENT DOORS) 21
MECHANICAL (KX) THERMOSTAT 21
HIGH LIMIT THERMOSTAT 22
INTERIOR LIGHTS (REAR MOUNTED, ROUND) 22
INTERIOR LIGHTS (SIDE MOUNTED, SQUARE) 23
COOLING FAN 25

SERVICE PROCEDURES AND ADJUSTMENTS 26
SOLID STATE TEMPERATURE CONTROL CALIBRATION 26
MECHANICAL (KX) THERMOSTAT CALIBRATION 27
SOLID STATE TEMPERATURE CONTROL TEST 28
TEMPERATURE PROBE TEST (SOLID STATE CONTROL) 29
HEATING ELEMENT TEST 30
BLOWER ADJUSTMENT 31
DOOR ADJUSTMENT 31
DOOR STRIKE ADJUSTMENT (INDEPENDENT DOORS) 32
DOOR CATCH ROLLER ADJUSTMENT (INDEPENDENT DOORS) 33
DOOR SWITCH ADJUSTMENT 34
DOOR CHAIN ADJUSTMENT (SIMULATANEOUS DOORS) 34
COMPUTER CONTROL 35
COMPUTER CONTROL TEMPERATURE CALIBRATION 36
COMPUTER CONTROL OPERATIONAL TEST 37
SERVICE PROGRAMMING AND TESTING FOR 3700 COMPUTER CONTROL 39

ELECTRICAL OPERATION 43
COMPONENT LAYOUT AND FUNCTION WC4ED 43
CONTROL PANEL LAYOUT AND FUNCTION WC4ED (BEFORE APRIL 2024) 45

TIMER COMPONENT LAYOUT AND FUNCTION (STARTING SN 482075494) 47

SEQUENCE OF OPERATIONS 49
SEQUENCE OF OPERATION - VC4ES, VC6ES WITH MECHANICAL KX THERMOSTAT 49
SEQUENCE OF OPERATION - WITH SOLID STATE TEMPERATURE CONTROL 49
SEQUENCE OF OPERATION - VC4EC, VC6EC (COMPUTER CONTROL) 50

DIAGRAMS 52
VC4ES & VC6ES WITH MECHANICAL (KX) CONTROLS SCHEMATICS AND WIRING DIAGRAMS 53
VC4ED & VC6ED W / SOLID STATE TEMPERATURE CONTROL, SCHEMATICS AND WIRING DIAGRAMS 59
VC4EC & VC6EC COMPUTER CONTROL SCHEMATICS AND WIRING DIAGRAMS 69

TROUBLESHOOTING 80
TROUBLESHOOTING 80
COMPUTER CONTROL MODELS ONLY 81

© VULCAN 2025

SERVICE UPDATES

SERVICE UPDATES - VC4E / VC6E

March 2025

- Added TIMER COMPONENT LAYOUT AND FUNCTION (STARTING SN 482075494).
- Updated VC4ES & VC6ES WITH MECHANICAL (KX) CONTROLS SCHEMATICS AND WIRING DIAGRAMS.
- Updated VC4ED & VC6ED W / SOLID STATE TEMPERATURE CONTROL, SCHEMATICS AND WIRING DIAGRAMS.
- Updated VC4EC & VC6EC COMPUTER CONTROL SCHEMATICS AND WIRING DIAGRAMS.
- Updated VC4ED & VC6ED W / SOLID STATE TEMPERATURE CONTROL, SCHEMATICS AND WIRING DIAGRAMS.

June 2019

- Added SERVICE PROGRAMMING AND TESTING FOR 3700 COMPUTER CONTROL.

October 2018

- HEATING ELEMENTS
- BLOWER AND MOTOR
- INTERIOR LIGHTS (Rear Mounted, Round)
- INTERIOR LIGHTS (Side Mounted, Square)
- DOOR ADJUSTMENT
- OVEN DOORS (INDEPENDENT DOORS) Starting at Serial Number 481916783
- OVEN DOORS (SIMULTANEOUS DOORS)
- COMPONENT LAYOUT AND FUNCTION WC4ED
- VC4ES & VC6ES WITH MECHANICAL (KX) CONTROLS SCHEMATICS AND WIRING DIAGRAMS

TIS DOCUMENT LIST - VC4E AND VC6E

SERVICE TAB	
Document Title	**Document Type**
VC4E and VC6E Service Manual	Service Manual
NCC Temp Control with Harness	Service Kit Instructions (SKI)

SERVICE TAB (Multimedia)	
Document Title	**Document Type**
Did You Know - VC4ED	Misc.
3700 Oven Quick Start Guide	Operator
Repair Flood-Damaged Equipment	Service Bulletin
VC3, VC4ED, and VC6ED & VC6EC Series Electric Convection Ovens I&O Manual	
VC3, VC4, and VC6 Series Electric Convection Oven Operator	Operator
Fundamentals of Gas	Service Instructions
TSB 1037A Hobart to Vulcan "Common" Model Cross Reference List	Technical Service Bulletin (TSB)
Convection Oven Computer Control Guide	Operator
Rating Plate Locationson Current Vulcan-Hart/Wolf Range Equipment	Technical Service Bulletin (TSB)
Convection Ovens Gas and Electric	Service Instructions

SERVICE TAB (Multimedia)	
SB770R Door Latch Change on Full Size Convection Ovens (VC4, VC6, SG, WKG, & WKE)	Technical Service Bulletin (TSB)
SB880 Independent Door Handle Assembly for Convection Ovens	Technical Service Bulletin (TSB)
SB930 Convection Oven Door Switch Replacement for Wolf Challenger XL and the Vulcan Endurance Gas Ranges	Technical Service Bulletin (TSB)
TSB 0368 Fast Thermostatic Controlled Convection Ovens	Technical Service Bulletin (TSB)
TSB 0652C Digital Countdown Timer Change - Convection Ovens	Technical Service Bulletin (TSB)
TSB 0872 Full Size Convection Oven-Door chain Adjustment Not Holding	Technical Service Bulletin (TSB)
TSB 0874 Full Size Convection Ovens - Lighting & Cooling Fan	Technical Service Bulletin (TSB)
TSB 0934 Gas Convection Ovens, Blower Motor & Wheel Change	Technical Service Bulletin (TSB)
TSB 0934 Programmable Controls - 355452-2 (Rev. 4.0)	Technical Service Bulletin (TSB)
All Half Size & Full Size Unites w/Independent Opening Doors -Enhanced Door Catch Info.	Technical Service Bulletin (TSB)
Watlow 734C Computer Control	Technical Service Instructions (TSI)
Vulcan & Wolf Gas Convection Ovens with White Rodgers Gas Valve	Technical Service Instructions (TSI)

PARTS TAB	
Document Title	**Document Type**
Part Catalog for VC4E and VC6E	Parts Catalog

DIAGRAMS TAB	
Document Title	**Document Type**
HGC5, DGC5, VC4G, WKGD Series	Wiring Diagram

GENERAL

INTRODUCTION

Procedures in this manual will apply to all models unless specified. Pictures and illustrations can be of any model unless the picture or illustration needs to be model specific.

FEATURES				
MODEL	**CAVITY DEPTH**	**TEMPERATURE CONTROL**	**DOORS (50/50)**	**COOK TIMER**
WCED	26.5"	Solid State	Simultaneus	1-Hour Dial

INSTALLATION, OPERATION AND CLEANING

Refer to the installation instructions on single or stacked ovens.

OPERATION

Refer to the instructions manual for specific operating instructions.

CLEANING

Refer to the instrucions manual for specific cleaning instructions.

LUBRICATION

- Cavity blower motor has sealed bearings and requires no additional lubrication.
- Huskey's TF1000 grease or equivalent high temperature non-stick grease.

TOOLS

Standard

- Standard set of hand tools
- VOM with A.C. current tester (Any quality VOM with a sensitivity of at least 20,000 ohms per volt can be used)
- Gear Puller to remove blower
- Temperature tester (thermocouple type)

Special

- Manometer
- Clamp on amp meter
- Spring force gauge, pull type with a minimum 30 pound full scale range (purchase locally)
- RTV sealant, 736 DOW silicone high temp (P/N 542133) or equivalent

SPECIFICATIONS

AMPERAGE - 3 PHASE/ 60HZ					
MODEL	**TOTAL POWER (KW)**	**PER LINE [1]**		**RECOMMENDED CIRCUIT PROTECTION [2]**	
		208V	**240V**	**208V**	**240V**
WC4ED	26.5	35	33	45	40
NOTES:	**[1] Amperage values in the table are nominal. Tolerance is +5/-10%.** **[2] Complied in accordance with National Electric Code, ANSI/NFPA 70, latest edition**				

AMPERAGE - 1 PHASE/ 60HZ					
MODEL	**TOTAL POWER (KW)**	**PER LINE [1]**		**RECOMMENDED CIRCUIT PROTECTION [2]**	
WC4ED	12.5	60	52	80	70
NOTES:	**[1] Amperage values in the table are nominal. Tolerance is +5/-10%.** **[2] Complied in accordance with National Electric Code, ANSI/NFPA 70, latest edition.**				

REMOVAL AND REPLACEMENT OF PARTS

COVERS AND PANELS



⚠ WARNING

Disconnect the electrical power to the machine and follow lockout / tagout procedures. There may be multiple circuits. Be sure all circuits are disconnected.

Top Front Cover

1. The top front cover is secured with four (4) screws, two on each side of cover. Remove these screws then remove the cover from the oven.

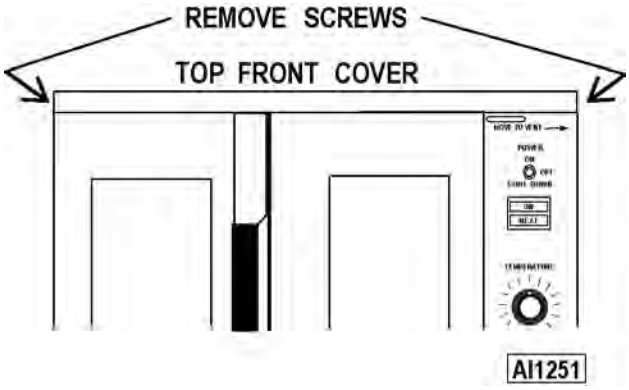

Fig. 1

2. Reverse the procedure to install.

Bottom Front Cover

1. The bottom front cover is secured with four (4) screws, two on each side of cover. Remove these screws then remove the cover from the oven.

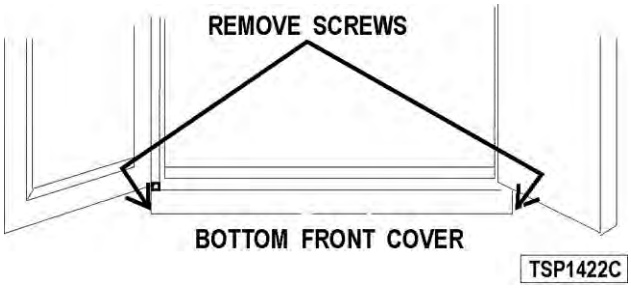

Fig. 2

2. Reverse the procedure to install.

Control Panel

1. Remove three (3) screws on the right side which secure the control panel then pull the panel away from the oven.

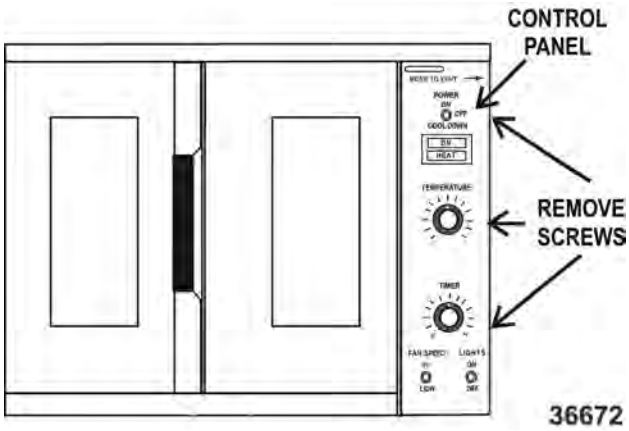

Fig. 3

2. Disconnect the temperature probe leads from the solid state temperature control.
3. Unplug the wire harness connector to the control panel components.
4. Reverse the procedure to install.

Right Side Panel

1. Remove the two screws near front of oven, which secure the bottom front cover and control panel.
2. Remove the remaining seven screws securing the right side panel.

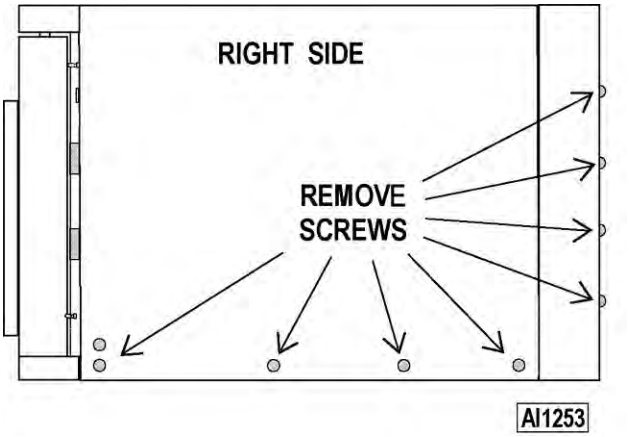

Fig. 4

3. Pull the right side panel out at the bottom then down to remove.
4. Reverse the procedure to install.

Left Side Panel

1. Remove the screws which secure the left side of the top front cover, bottom front cover and control panel.

2. Remove the seven screws securing the left side panel.

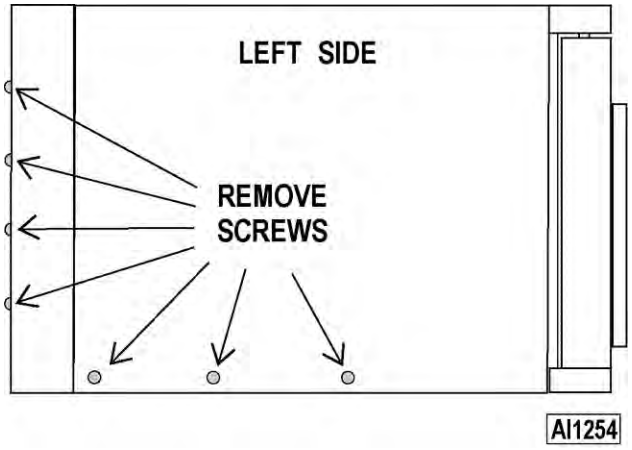

Fig. 5

3. Pull the left side panel out at the bottom then down to remove.
4. Reverse the procedure to install.

CONTROL PANEL COMPONENTS



⚠ WARNING

Disconnect the electrical power to the machine and follow lockout / tagout procedures. There may be multiple circuits. Be sure all circuits are disconnected.

Removable Components

1. Remove the control panel as outlined under COVERS AND PANELS.
2. Remove the component being replaced.
3. Reverse the procedure to install the replacement component, then check oven for proper operation

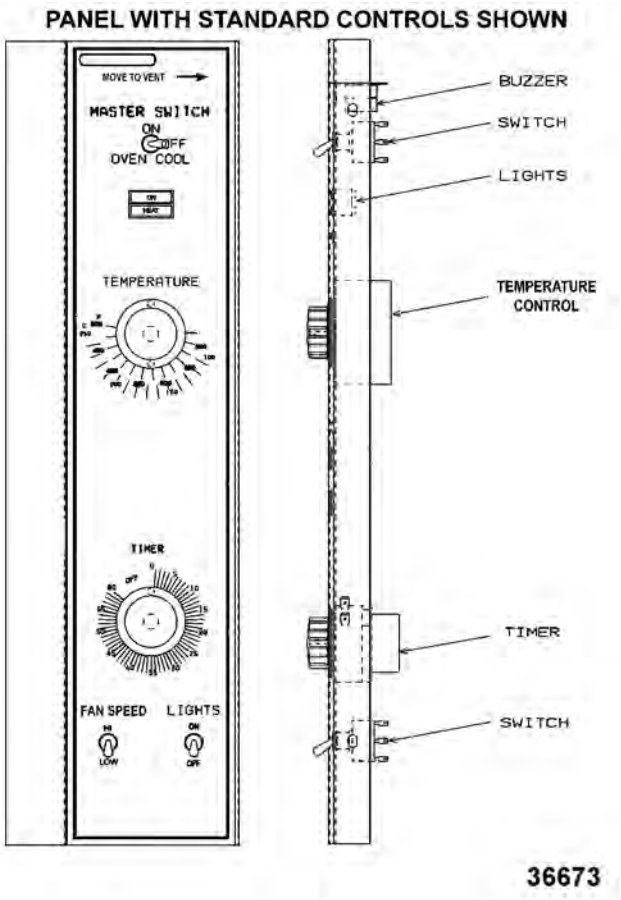

Fig. 6

COMPONENT PANEL COMPONENTS



⚠ WARNING

Disconnect the electrical power to the machine and follow lockout / tagout procedures. There may be multiple circuits. Be sure all circuits are disconnected.

Removable Components

1. Remove the right side panel as outlined under COVERS AND PANELS.

NOTE: If right side panel is not accessible, this component can be serviced by removing the control panel as outlined under COVERS AND PANELS.

2. Disconnect the wire leads to the component being replaced.
3. Remove the component.
4. Reverse the procedure to install the replacement component and check oven for proper operation.

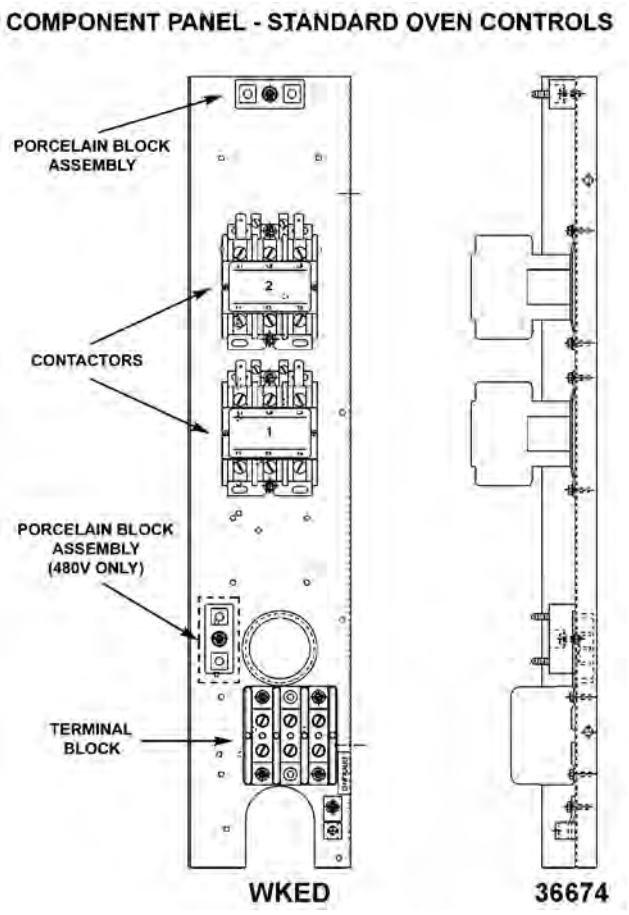

Fig. 7

TEMPERATURE PROBE (SOLID STATE CONTROL)



⚠ WARNING

Disconnect the electrical power to the machine and follow lockout / tagout procedures. There may be multiple circuits. Be sure all circuits are disconnected.

1. Remove the right side panel as outlined under COVERS AND PANELS.

NOTE: If right side panel is not accessible, this component can be serviced by removing the control panel as outlined under COVER AND PANELS.

2. Disconnect the probe leads from the solid state temperature control.
3. Remove the racks and right rack support.
4. Remove the probe guard or mounting clips.

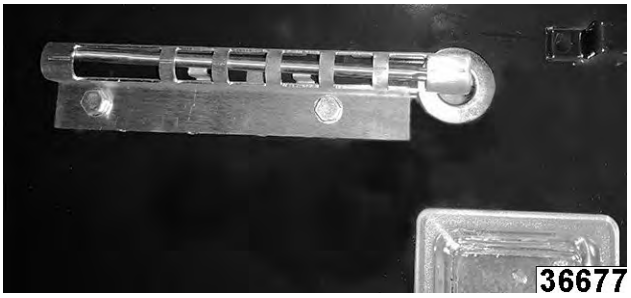

Fig. 8

5. Remove probe by pushing it through the oven wall and into the control panel area.

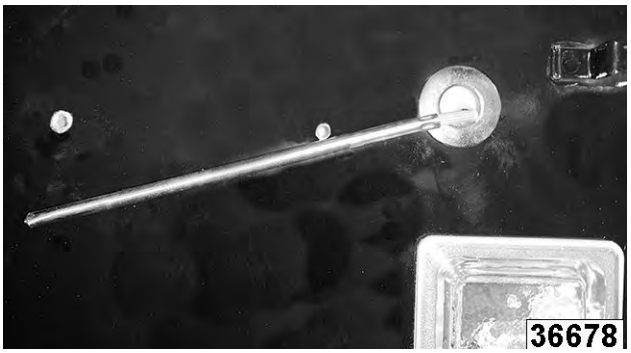

Fig. 9

NOTE: The hole in the oven cavity wall does not line up straight with the oven cavity outer shell, therefore the probe must be removed at an angle.

6. Reverse the procedure to install the replacement probe.

NOTICE

The tip of the probe should be located near the center of the large cutout, as shown in (fig link). The end with the wire attached should be protected by the guard. It is possible to damage the probe/wire with force from a tray if probe is not protected properly.



Fig. 10

7. Adjust the temperature control as outlined under SOLID STATE TEMPERATURE CONTROL CALIBRATION in SERVICE PROCEDURES AND ADJUSTMENTS.

HEATING ELEMENTS Ending at Serial Number 481916863



⚠ WARNING

Disconnect the electrical power to the machine and follow lockout / tagout procedures. There may be multiple circuits. Be sure all circuits are disconnected.

NOTE: Starting with production in October, 2001, the top cavity panel will have 3/4" square holes for easier element removal. Ovens manufactured prior to this date have 1/2" round holes that sometimes make it difficult to remove elements thru the cavity. A serial number cut off will **not** be available. Follow the procedures for element removal as outlined below.

Front Access

1. Remove the oven racks and rack supports.
2. Remove the "top" door seal from the oven.
3. Determine if the heating element to replace is on the **left** or **right** side in the oven cavity. The element locations from front to back are: Right side - R1, R2 & R3; Left side - R4, R5 & R6.
   A. Measure the current draw of the heating elements as outlined under HEATING ELEMENT TEST in SERVICE PROCEDURES AND ADJUSTMENTS.
4. From inside the oven cavity, remove the perforated panel from the same side of the element being replaced.

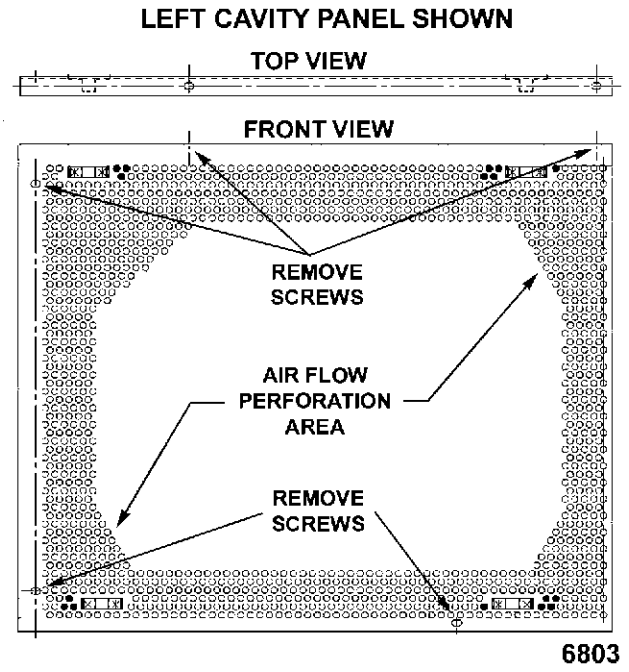

Fig. 11

   A. If removing the right side panel, also remove the probe guard or mounting clips.
   B. Run the probe wire thru the panel opening before lifting panel out.
5. From the element being replaced, remove the hold down clamps, the mounting bracket screws at the top, then remove the element.

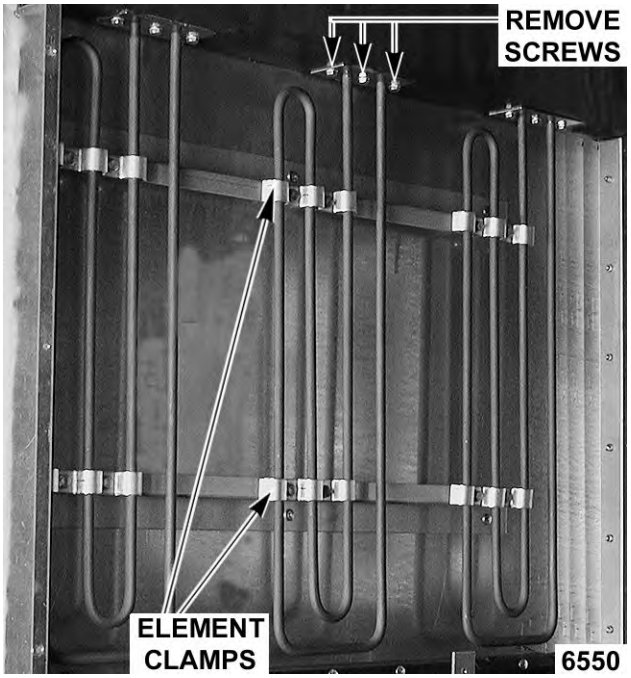

Fig. 12

NOTE: The mounting bracket is sealed with RTV which may still hold the element after the screws are removed. Also, in some cases, the ring terminal

connected to the element may interfere with easy removal. If access to the left side panel and/or the top panel is available, see ALTERNATE ACCESS.

6. Disconnect the lead wires from the element.
7. Clean RTV residue from the mating surface inside the oven, apply new high temperature RTV to the heating element mounting bracket and reverse procedure to install.
8. Check for proper operation.

Alternate Access

NOTE: If the heating element is not easy to remove from inside the oven cavity, and access to the left side panel and/or the top panel is available, this alternate removal method may be used.

NOTE: On stacked ovens, if the bottom oven is being serviced and the heating element to replace is on the right side, the ovens must be unstacked to access the heating element terminals through the top. Once unstacked, follow the removal procedure below.

1. Perform steps 1 thru 4 under FRONT ACCESS.
2. If the element is on the **left** side:
   A. the insulation at the top to expose the element terminals.
   B. Remove the lead wires from the element being replaced. Proceed to step 4.
3. If the element is on the **right side**:
   A. Remove the top panel and pull back the insulation to expose the element terminals.
   B. Remove the lead wires from the element being replaced.
4. clamps holding the element vertical, the screw's securing mounting bracket at the top, and then remove the element.

NOTE: The mounting bracket is sealed with RTV which may still hold the element after the screws are removed.

5. Clean RTV residue from the mating surface inside the oven, apply new high temperature RTV to the heating element mounting bracket and reverse procedure to install.
6. Check for proper operation.

HEATING ELEMENTS



⚠ WARNING

Disconnect the electrical power to the machine and follow lockout / tagout procedures.

1. Remove racks.
2. Remove RIGHT SIDE PANEL(S).
3. Remove nuts (1, Fig. 13) from element wiring connections.

NOTICE

Use second wrench on nut (2, Fig. 13) behind terminal when removing or installing to prevent element stud from twisting and getting damaging.

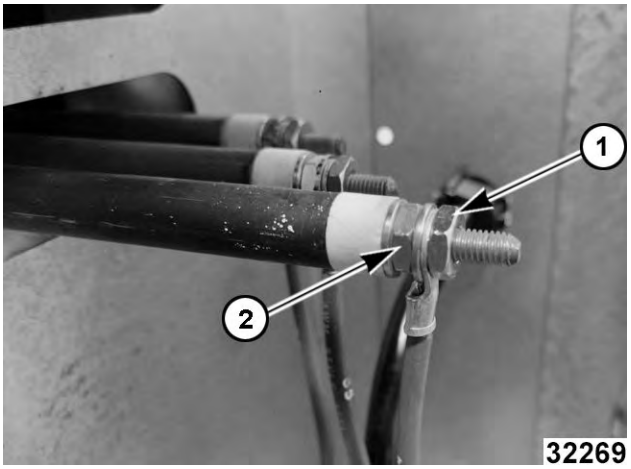

Fig. 13

4. Remove top baffle.

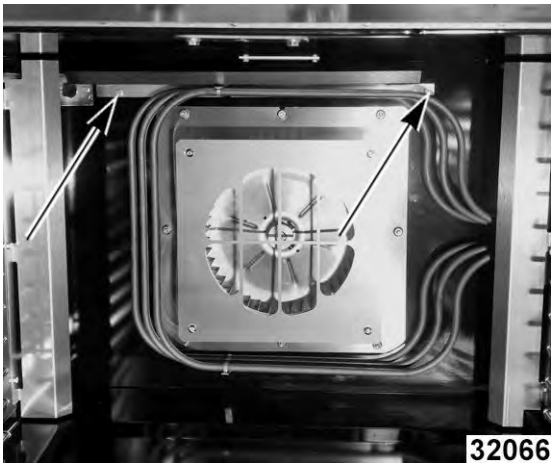

Fig. 14

5. Remove side baffle.

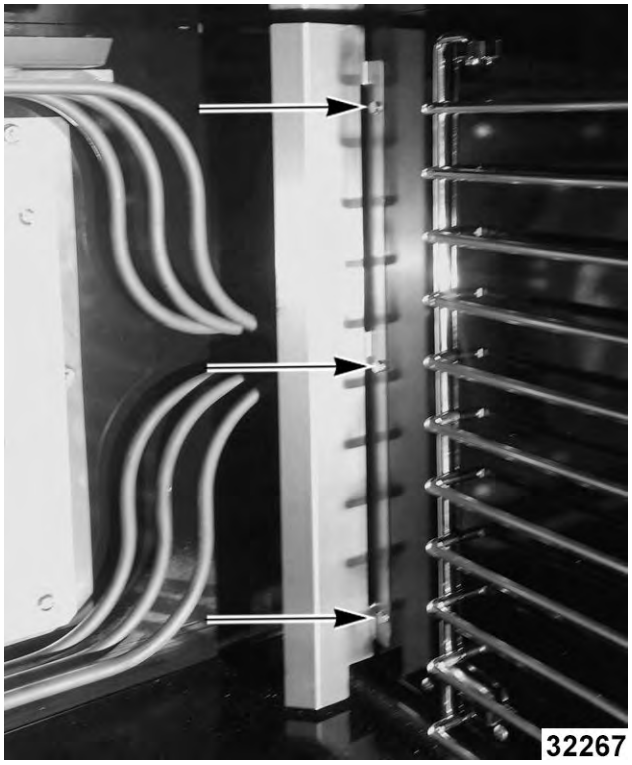

Fig. 15

6. Remove element support brackets.

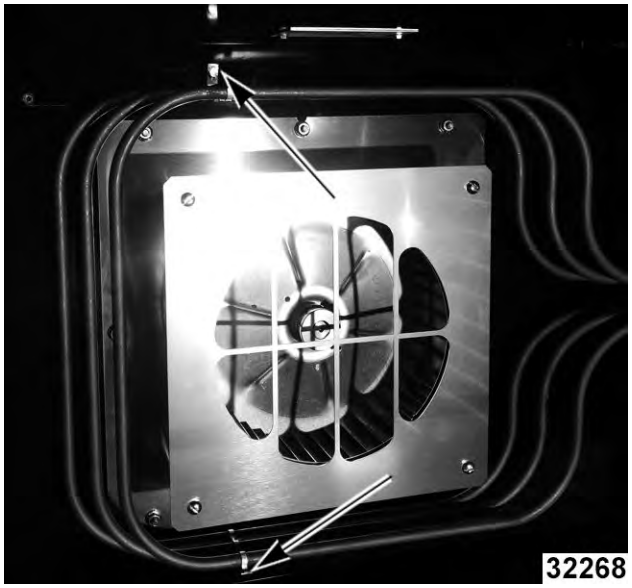

Fig. 16

7. Loosen all element mounting plate hex head screws.

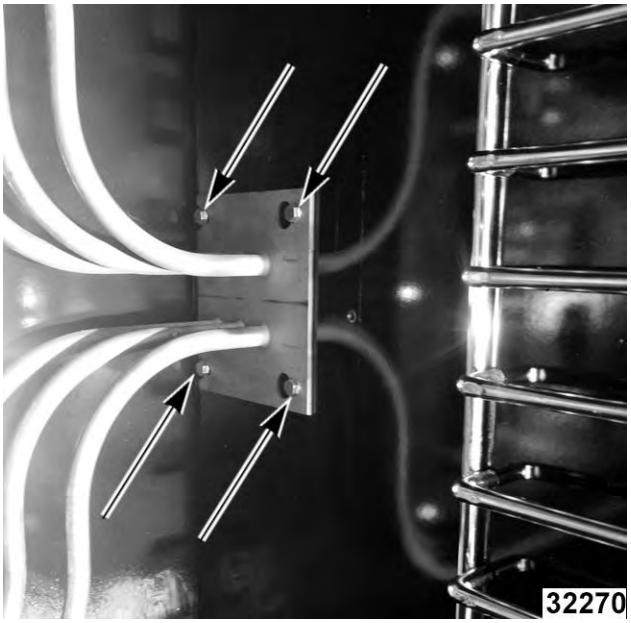

Fig. 17

8. Slide element mounting plate (1, Fig. 18) over to release from cavity wall and remove elements from oven.

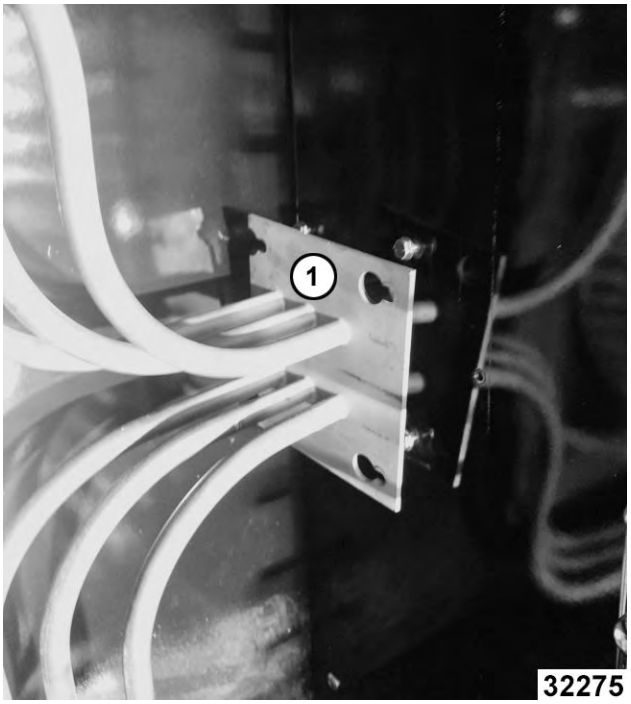

Fig. 18

9. Reverse procedure to install.
10. Verify operation.

BLOWER AND MOTOR Ending at Serial Number 481916863



⚠ WARNING

Disconnect the electrical power to the machine and follow lockout / tagout procedures. There may be multiple circuits. Be sure all circuits are disconnected.

1. Take out the racks and rack supports.
2. Remove screws securing baffle panel and remove the panel.

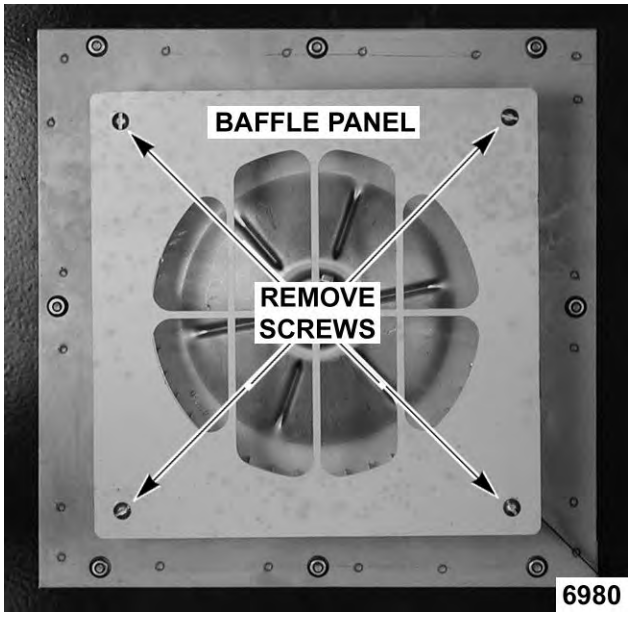

Fig. 19

3. If replacing:
   - A. Blower Only - Loosen set screws on blower hub and using a bearing puller, remove blower from motor shaft.
     - 1) Reverse procedure to install and adjust blower position as outlined under BLOWER ADJUSTMENT in SERVICE PROCEDURES AND ADJUSTMENTS.
   - B. Motor - perform step 3A and continue procedure.
4. Remove the nuts that secure the motor mounting plate to the rear wall.

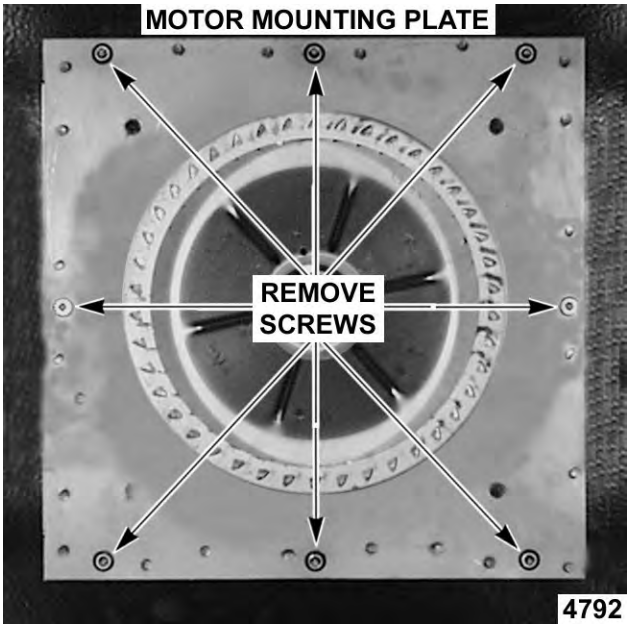

Fig. 20

5. Place a piece of cardboard on the bottom of the oven cavity to protect its surface from any damage during motor assembly removal.
6. Pull the motor assembly into the oven cavity and place it on the cardboard.
7. Remove the junction box cover from the motor, disconnect lead wires and remove the conduit.
8. Remove motor mounting bolts and flat washers then lift the motor from the mounting plate.
9. Position the replacement motor on the motor mounting plate and install mounting bolts and washers. Hand tighten mounting bolts only.

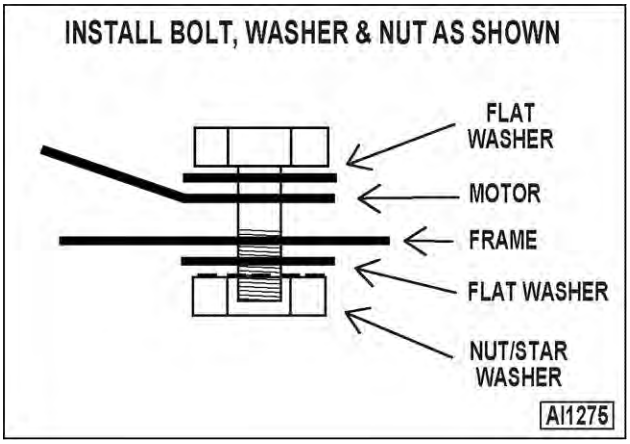

Fig. 21

10. Reconnect lead wires at the motor, replace conduit and junction box cover.

NOTE: Check data plate on motor for wiring schematic. The motor must rotate **clockwise** when viewed from the shaft end.

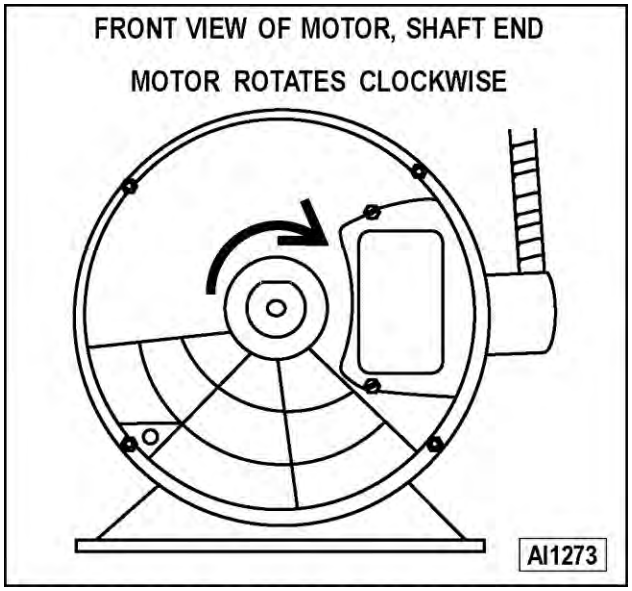

Fig. 22

11. Slide blower onto motor shaft until hub is flush with end of shaft then tighten set screws.
12. Adjust motor position until blower is parallel to motor mounting plate as outlined under BLOWER ADJUSTMENT in SERVICE PROCEDURES AND ADJUSTMENTS.
13. Position motor mounting plate on the rear wall and secure with nuts and washers.
14. Replace the baffle panel.
15. Remove cardboard from the bottom of the oven cavity.
16. Check oven for proper operation then replace rack guides and racks

BLOWER AND MOTOR



⚠ WARNING

Disconnect the electrical power to the machine and follow lockout / tagout procedures.

1. Remove HEATING ELEMENTS.
2. Disconnect motor harness (1, Fig. 23).

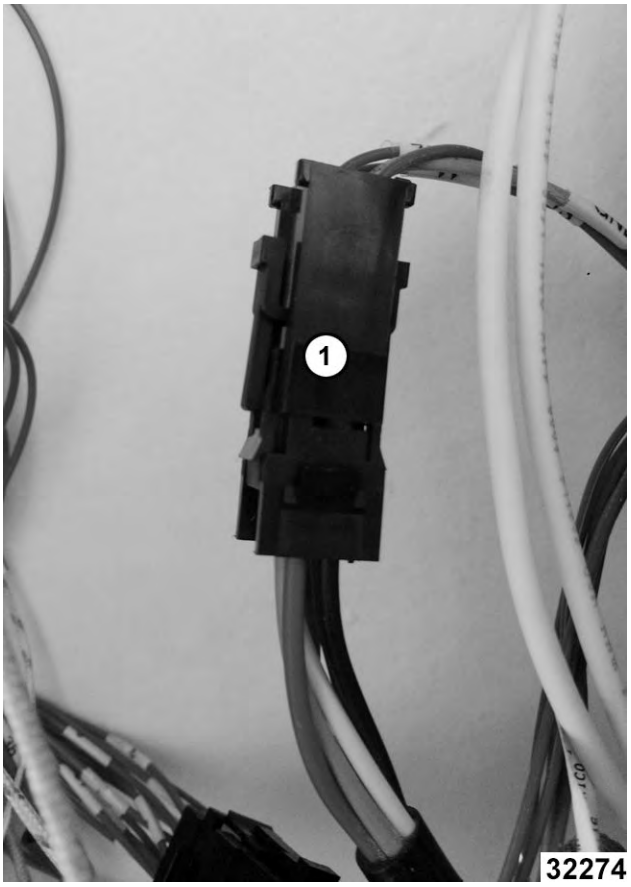

Fig. 23

3. Pinch cord grip together to remove from rear panel.

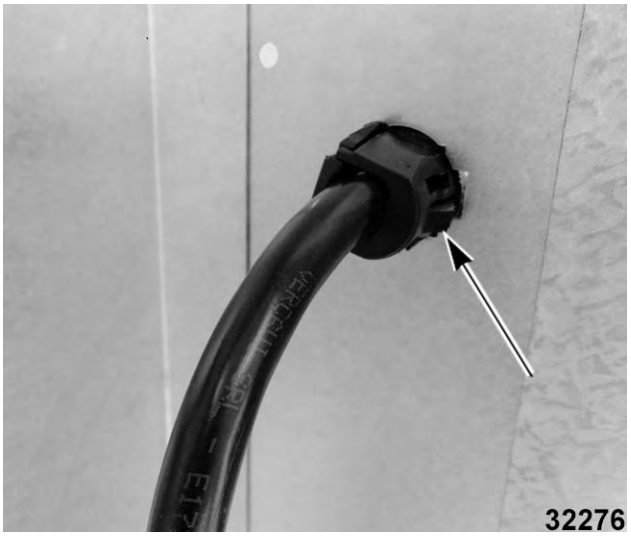

Fig. 24

4. Push motor wiring harness/cord out hole in rear panel.
5. Remove blower baffle screws (2, Fig. 25) if applicable.

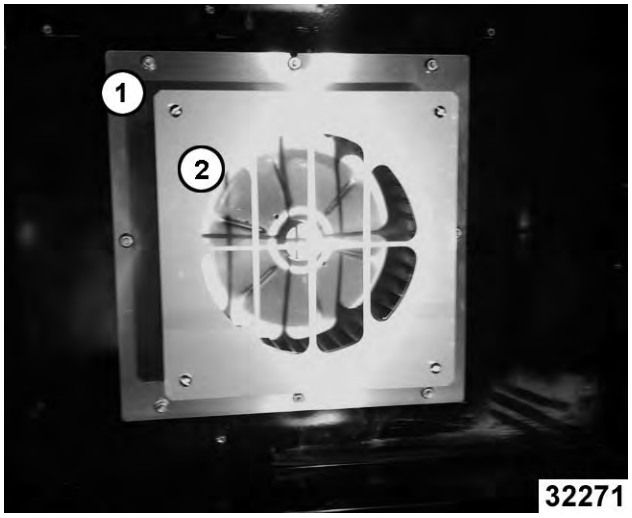

Fig. 25

6. Remove motor mounting plate nuts (1, Fig. 25).
7. Place a piece of cardboard on bottom of oven cavity to protect its surface from any damage during motor assembly removal.
8. Pull motor assembly into oven cavity and place on cardboard.
9. Remove motor mounting bolts and washers and lift motor off mounting plate.

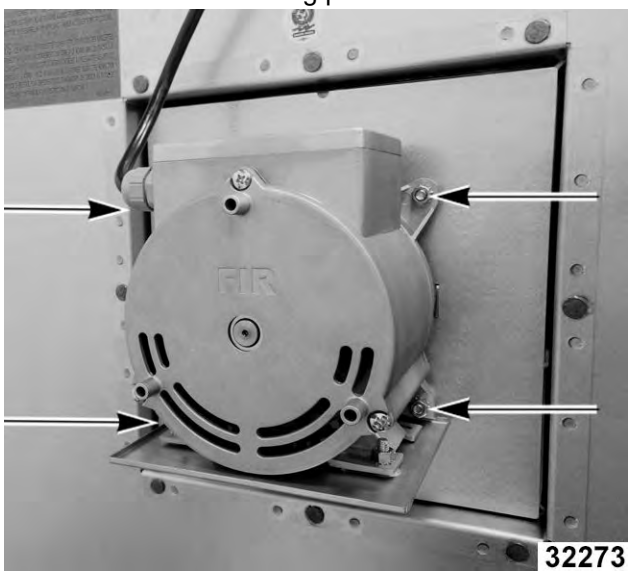

Fig. 26

NOTE: Motor graphics are shown with motor installed.

10. Remove drip pan from motor and install onto replacement motor.



Fig. 27

11. Reverse procedure to install.
12. Verify operation.

DOOR SWITCH



⚠ WARNING

Disconnect the electrical power to the machine and follow lockout / tagout procedures. There may be multiple circuits. Be sure all circuits are disconnected.

1. Remove the top front cover as outlined under COVERS AND PANELS.
2. Disconnect the lead wires to the door switch.
3. Remove the switch.

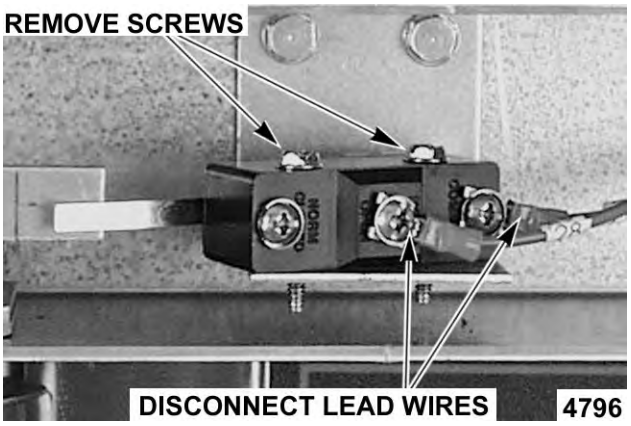

Fig. 28

4. Reverse procedure to install the replacement switch and check for proper adjustment as outlined under DOOR SWITCH ADJUSTMENT in SERVICE PROCEDURES AND ADJUSTMENTS.

DOOR WINDOW



⚠ WARNING

Disconnect the electrical power to the machine and follow lockout / tagout procedures. There may be multiple circuits. Be sure all circuits are disconnected.

1. Remove the screws at the top and bottom of door.

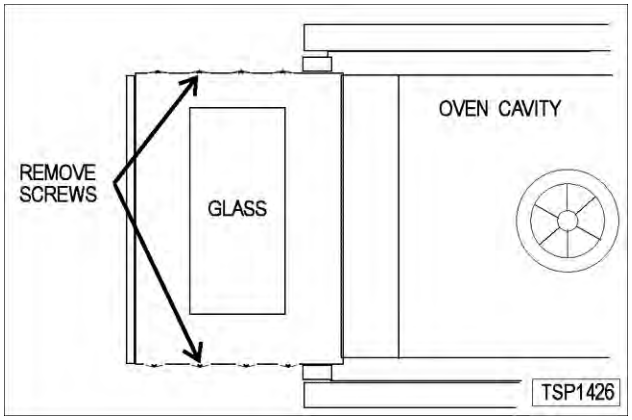

Fig. 29

2. Simultaneous doors:
   A. If replacing window on the left door, remove the handle from the front of the door then remove door seal from the inside edge of the door.
      1) Lift out the inner door panel and window assembly.
      2) If replacing window on the right door, remove the screws along the inside edge (if applicable) of the door then remove the inner door panel and window assembly.
3. Remove the screws securing the window "tabs" to the door bracket and lift the window assembly out from the door frame.

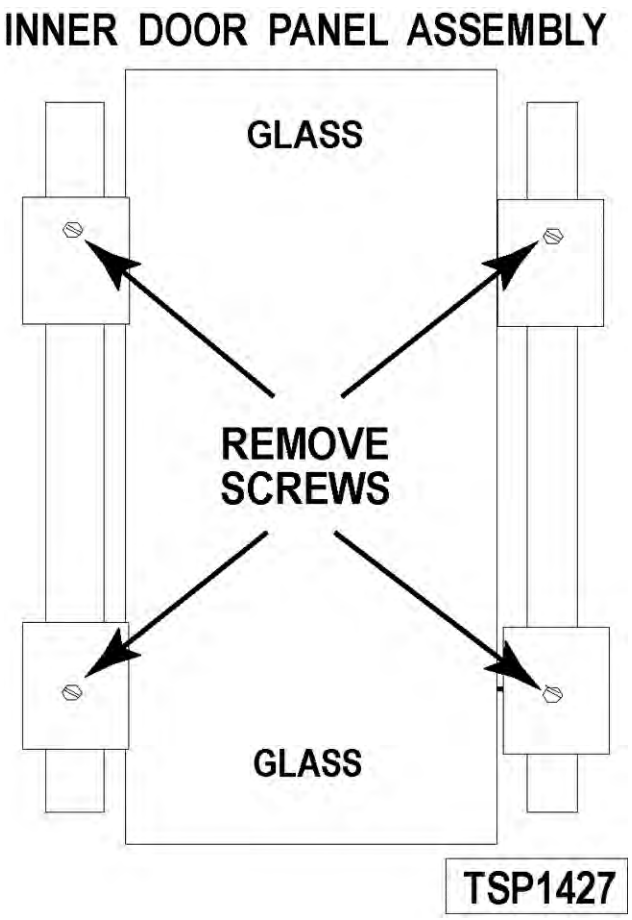

Fig. 30

4. Reverse procedure to install the replacement window.

OVEN DOORS AND BEARINGS (INDEPENDENT DOORS) Ending at Serial Number 481916782



⚠ WARNING

Disconnect the electrical power to the machine and follow lockout / tagout procedures. There may be multiple circuits. Be sure all circuits are disconnected.

1. Remove the top front cover and bottom front cover as outlined under COVERS AND PANELS.
2. Remove the door switch lever.

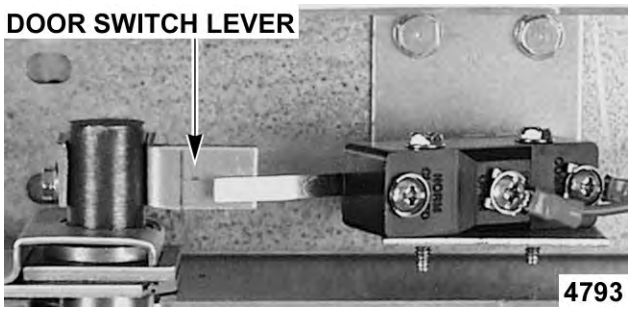

Fig. 31

3. Remove the lower door seal strip to expose the mounting screws of the door assembly.
4. Remove the two (2) lower sill bolts by the lower door shaft and the four (4) counter-sunk screws from the lower sill.

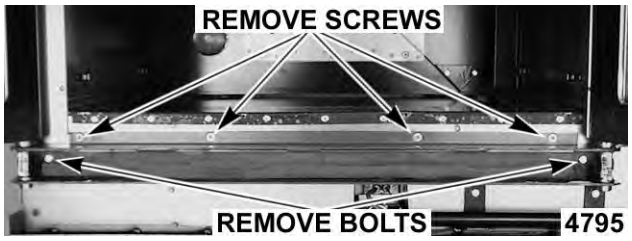

Fig. 32

NOTE: The door assembly is heavy and will drop down once the last screw is removed. If removing door assembly with-out assistance, use caution.

5. Tilt the top of the door slightly forward and lift the door up until the bottom of the door shaft clears the opening in the sill.
6. Lay the door flat to prevent damage.
7. The top and bottom bearings are now accessible for inspection and/or replacement if needed.
   A. If bearings are ok, proceed to step 8.
   B. If replacing the top bearing, remove the top bearing retainer and top bearing.

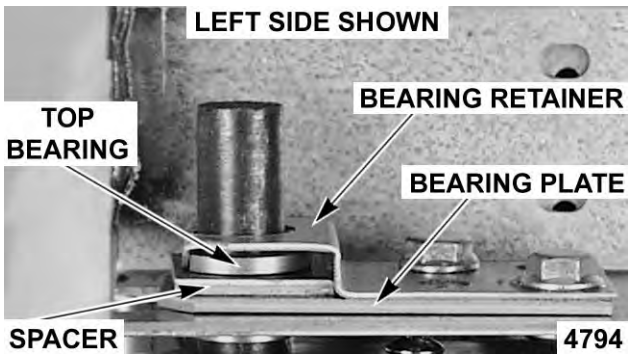

Fig. 33

   C. If replacing the bottom bearing, remove it from the door shaft or the lower sill opening.
8. Reverse procedure to install door assembly and check for proper adjustment as outlined under DOOR ADJUSTMENT and DOOR SWITCH ADJUSTMENT in SERVICE PROCEDURES AND ADJUSTMENTS.

OVEN DOORS (INDEPENDENT DOORS) Starting at Serial Number 481916783



⚠ WARNING

Disconnect the electrical power to the machine and follow lockout / tagout procedures.

1. Remove TOP FRONT COVER.
2. If servicing right side door, remove door switch lever (1, Fig. 34).

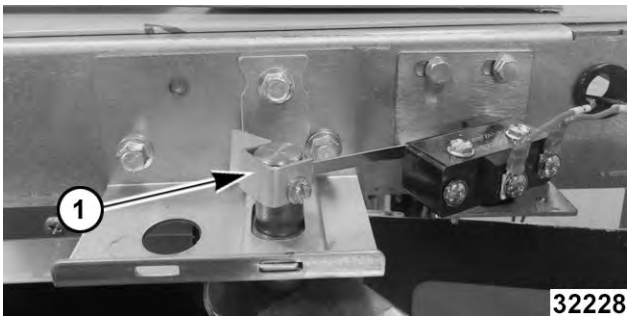

Fig. 34

3. While supporting door, remove hex bolts holding upper bearing retainer (1, Fig. 35) and upper shaft bracket (2, Fig. 35).

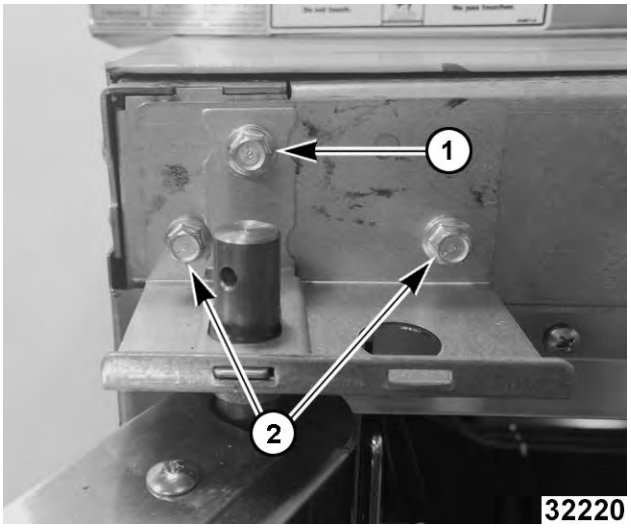

Fig. 35

4. Lift door off lower shaft bracket.

NOTICE

Lay door on flat protective surface to service.

5. Reverse procedure to install.
6. Perform DOOR ADJUSTMENT if servicing right side door.

OVEN DOORS (SIMULTANEOUS DOORS) Ending at Serial Number 481916783



⚠ WARNING

Disconnect the electrical power to the machine and follow lockout / tagout procedures. There may be multiple circuits. Be sure all circuits are disconnected.

Assembly Removal

1. Remove the top front cover and bottom front cover as outlined under COVERS AND PANELS.
2. Remove the door switch lever.

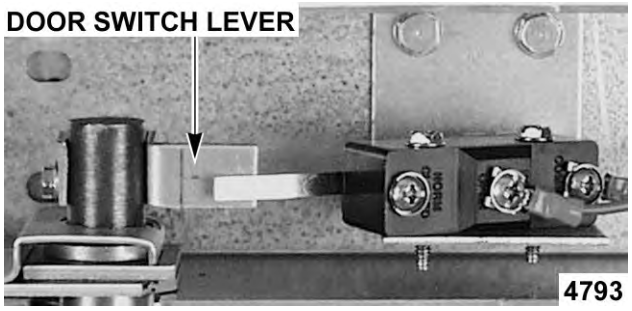

Fig. 36

3. Remove the top bearing retainers and top bearings.

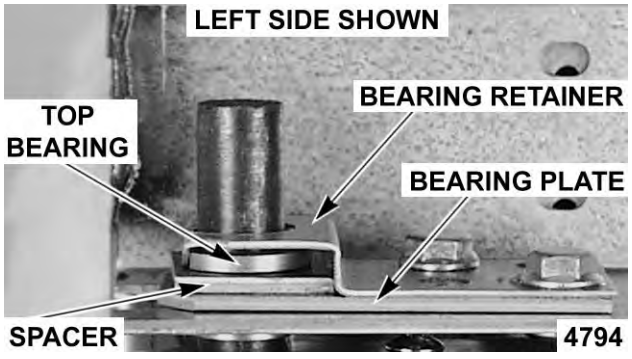

Fig. 37

4. Remove the lower door seal strip to expose the mounting screws of the door assembly.
   A. Remove the two (2) lower sill bolts by the lower door shaft and the four (4) counter-sunk screws from the lower sill.

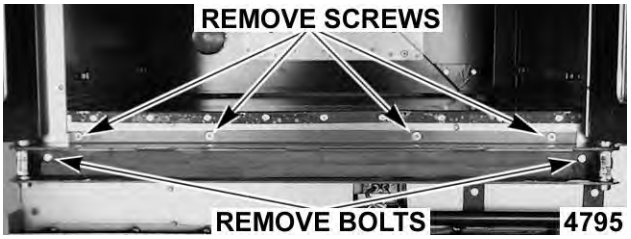

Fig. 38

NOTE: The door assembly is heavy and will drop down once the last screw is removed. If removing door assembly with-out assistance, use caution.

5. Lift up on the door assembly and swing the right side out then move the assembly to the left to clear the slots in the upper door sill.
6. Lay the door assembly on a flat cushioned surface for disassembly.
7. Reverse procedure to install door assembly and check for proper adjustment as outlined under DOOR ADJUSTMENT, DOOR CHAIN ADJUSTMENT (SIMULTANEOUS DOORS) and DOOR SWITCH ADJUSTMENT in SERVICE PROCEDURES AND ADJUSTMENTS.

Disassembly

1. Remove the door assembly as outlined in OVEN DOORS (SIMULTANEOUS) under ASSEMBLY REMOVAL.
2. Remove the door chain by loosening one of the turnbuckles.
3. Loosen the set screw on the sprocket of door being replaced.
4. Drive out the spirol pin from the sprocket of door being replaced.
5. Remove the door from lower sill bearings and sprocket.

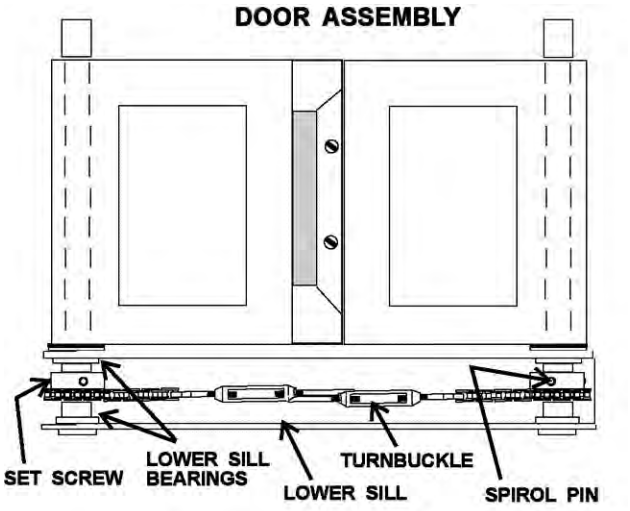

Fig. 39

A. Door assembly parts are now accessible for inspection and/or replacement if necessary.

6. Reverse procedure to re-assemble the door assembly parts and check for proper adjustment as outlined under DOOR CHAIN ADJUSTMENT (SIMULTANEOUS DOORS) in SERVICE PROCEDURES AND ADJUSTMENTS.

OVEN DOORS (SIMULTANEOUS DOORS)

1. Remove TOP FRONT COVER and BOTTOM FRONT COVER.
2. Remove door switch lever.

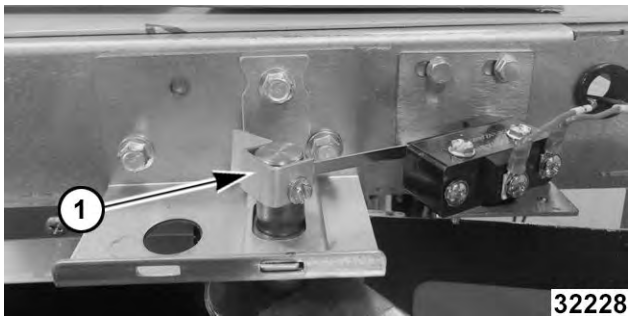

Fig. 40

3. Remove door chain by loosening one of the turnbuckles (Fig. 41).

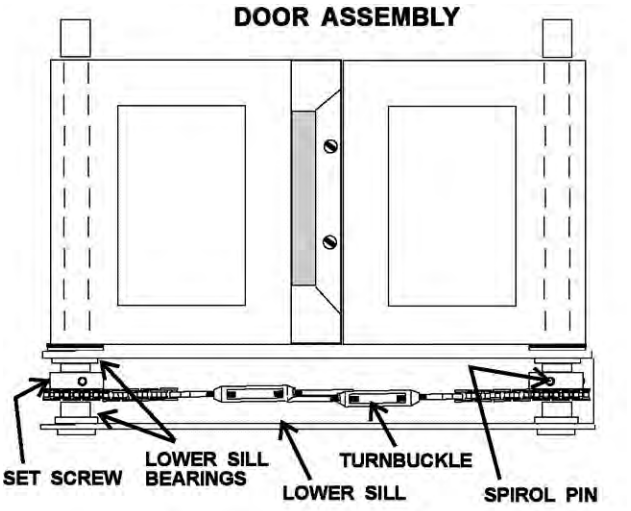

Fig. 41

4. Loosen the set screw on the sprocket of door being replaced (Fig. 41).
5. Drive out the spiral pin from the sprocket of door being replaced (Fig. 41).
6. While supporting door, remove hex head bolts holding upper bearing retainer (1, Fig. 42) and upper shaft bracket (2, Fig. 42).

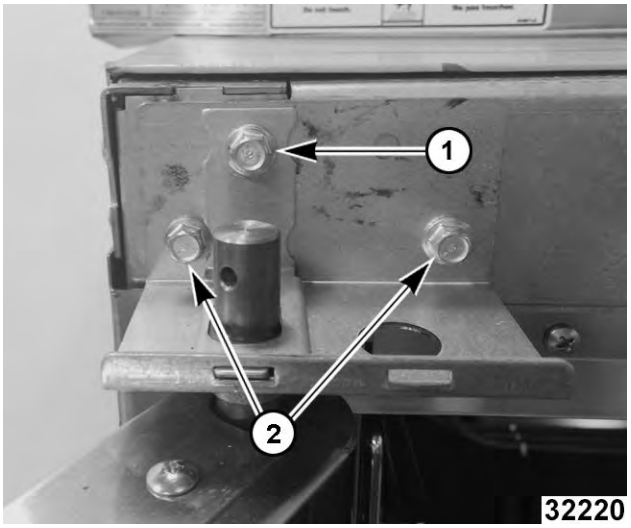

Fig. 42

7. Remove door(s) from lower sill bearings and sprocket Fig. 41.

NOTICE

Lay door on flat protective surface to service.

8. Reverse procedure to install.

NOTICE

Verify spacers are reassembled as found when removed.

9. Perform door adjustments.
   A. DOOR ADJUSTMENT .
   B. DOOR CHAIN ADJUSTMENT (SIMULATANEOUS DOORS) .
   C. DOOR SWITCH ADJUSTMENT .

ROLLER LATCH ASSEMBLY (INDEPENDENT DOORS)

NOTE: For units with serial number starting with 48 made after 8/12/07 and serial number starting with 54 made after 8/26/07.



⚠ WARNING

Disconnect the electrical power to the machine and follow lockout / tagout procedures. There may be multiple circuits. Be sure all circuits are disconnected.

1. Remove the screws that attach roller latch assembly to door.

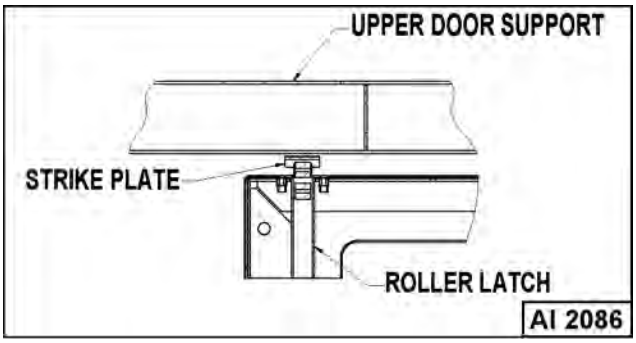

Fig. 43

2. Reverse procedure to install.

DOOR CATCH ROLLER ASSEMBLY (INDEPENDENT DOORS)

NOTE: For units with serial number starting with 48 made before 8/13/07 and serial number starting with 54 made before 8/27/07.



⚠ WARNING

Disconnect the electrical power to the machine and follow lockout / tagout procedures. There may be multiple circuits. Be sure all circuits are disconnected.

1. Remove the top front cover as outlined under COVERS AND PANELS.
2. Remove the catch roller assembly.

FRONT VIEW

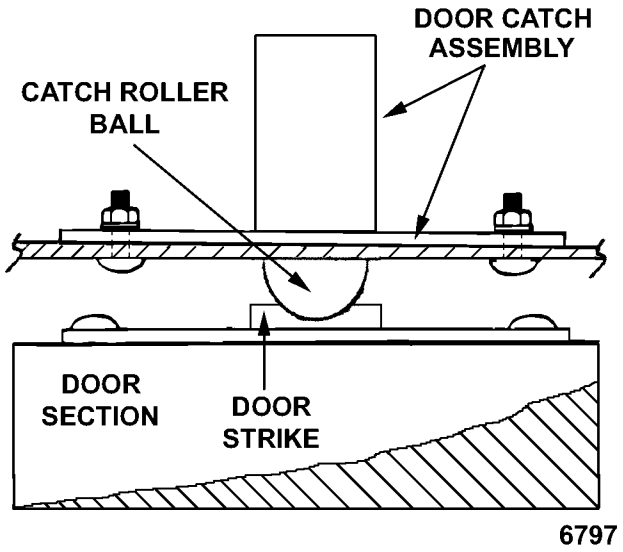

Fig. 44

3. Reverse procedure to install.
4. Adjust the catch roller as outlined under DOOR CATCH (ROLLER) ADJUSTMENT (INDEPENDENT DOORS) in SERVICE PROCEDURES AND ADJUSTMENTS.

MECHANICAL (KX) THERMOSTAT



⚠ WARNING

Disconnect the electrical power to the machine and follow lockout / tagout procedures. There may be multiple circuits. Be sure all circuits are disconnected.

1. Remove the racks and right rack support.
2. Remove the thermostat knob and mounting screws from the control panel and then remove the control panel.

3. Remove the probe guard from the oven cavity wall.

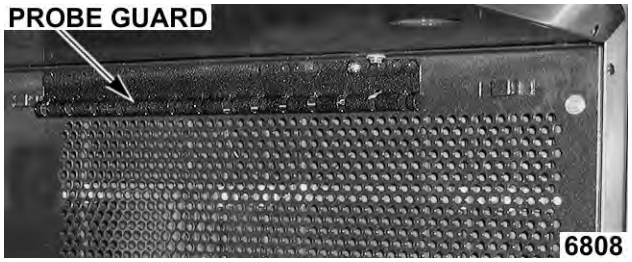

Fig. 45

NOTE: When installing probe guard, the probe should not extend beyond the guard.

4. Remove the thermostat bulb from the oven cavity by pushing it through the oven wall and into the control panel area.

NOTE: The hole in the oven cavity wall does not line up straight with the oven cavity outer shell, therefore the probe must be removed at an angle.

5. Reverse the procedure to install.

6. Adjust the thermostat as outlined under MECHANICAL (KX) THERMOSTAT CALIBRATION in SERVICE PROCEDURES AND ADJUSTMENTS.

HIGH LIMIT THERMOSTAT



⚠ WARNING

Disconnect the electrical power to the machine and follow lockout / tagout procedures. There may be multiple circuits. Be sure all circuits are disconnected.

1. Take out racks from the oven.

2. Remove the high limit thermostat cover/mounting plate from inside the oven cavity at the top.

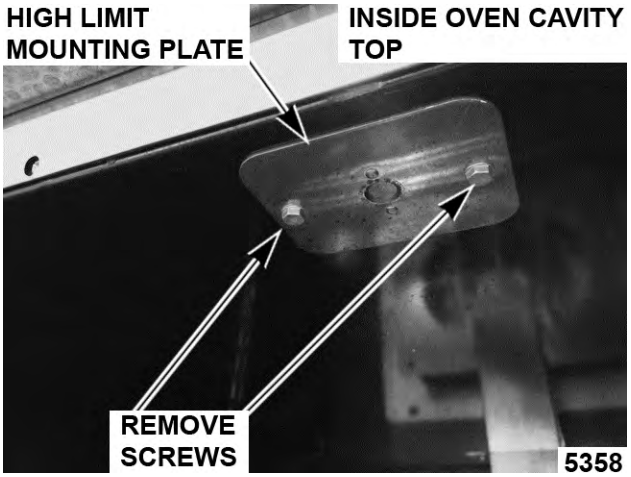

Fig. 46

3. Disconnect lead wires from high limit thermostat then remove high limit thermostat from cover/ mounting plate.

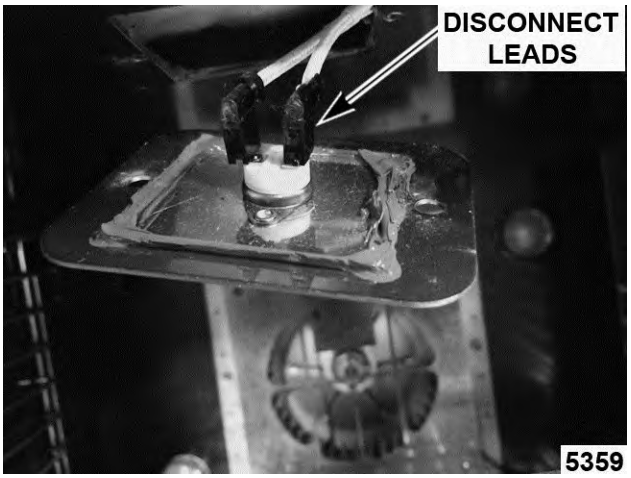

Fig. 47

NOTE: Remove the old RTV sealer from the cover and mating surfaces inside the oven cavity and apply new high temperature RTV sealer before installing.

4. Reverse procedure to install.

INTERIOR LIGHTS (Rear Mounted, Round)



⚠ WARNING

Disconnect the electrical power to the machine and follow lockout / tagout procedures.

Lamp

1. Remove racks.

2. Unscrew glass lens for the light being replaced then unscrew bulb.

NOTE: Use a cloth when handling bulb so you do not leave fingerprints on bulb.

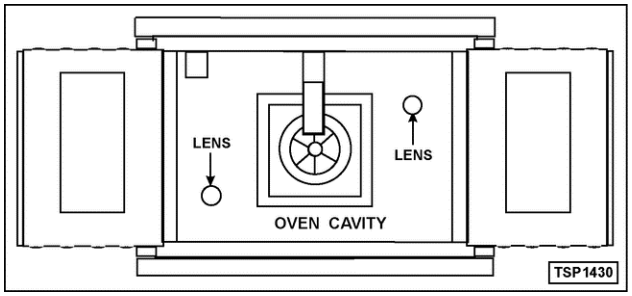

Fig. 48

3. Replace bulb then reverse procedure to install.



⚠ WARNING

Disconnect the electrical power to the machine and follow lockout / tagout procedures.

Lamp Assembly

1. Remove lens and bulb.
2. Remove springs from retaining tabs (2 places) on the socket.

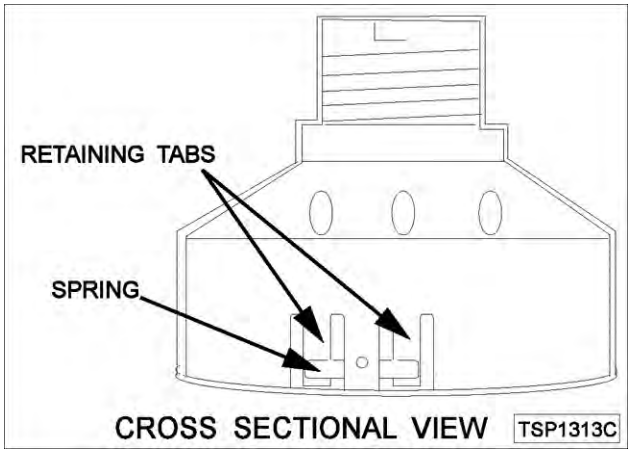

Fig. 49

3. Depress retaining tabs and pull socket out from the oven, far enough to disconnect lead wires.
4. Remove socket from the oven.
5. Attach lead wires to the replacement socket.
6. Insert socket into the hole in oven and push until socket is held in place by retaining tabs.
7. Install light bulb and lens.
8. Check for proper operation.

INTERIOR LIGHTS (Side Mounted, Square)

Bulb Replacement



⚠ WARNING

Disconnect the electrical power to the machine and follow lockout / tagout procedures.

1. Remove racks and right-side hand rack guide.
2. Pull lamp cover off.
3. Grasp lamp using a clean cloth and remove from lamp assembly.

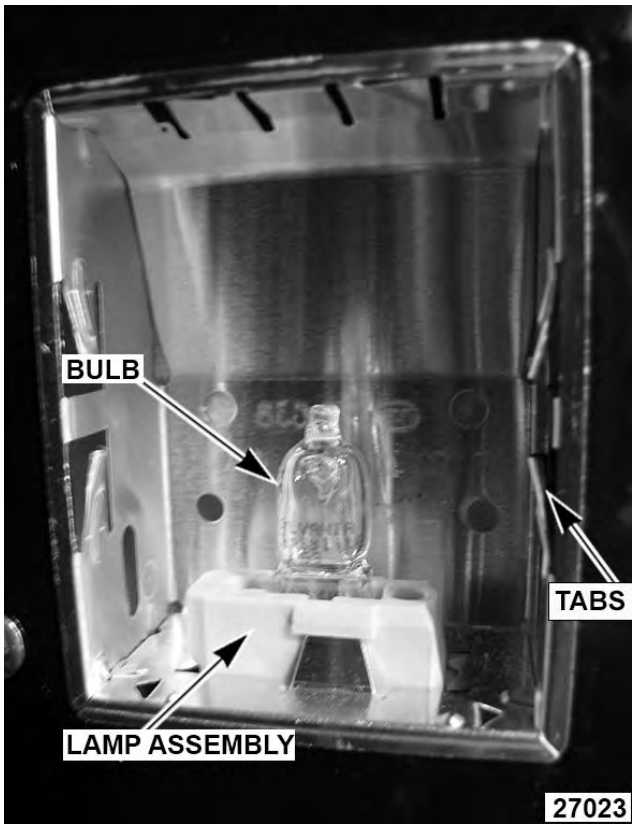

Fig. 50

4. Reverse procedure to install new bulb.

NOTE: Verify gasket (1, Fig. 51) is flat on lamp cover and not damaged.

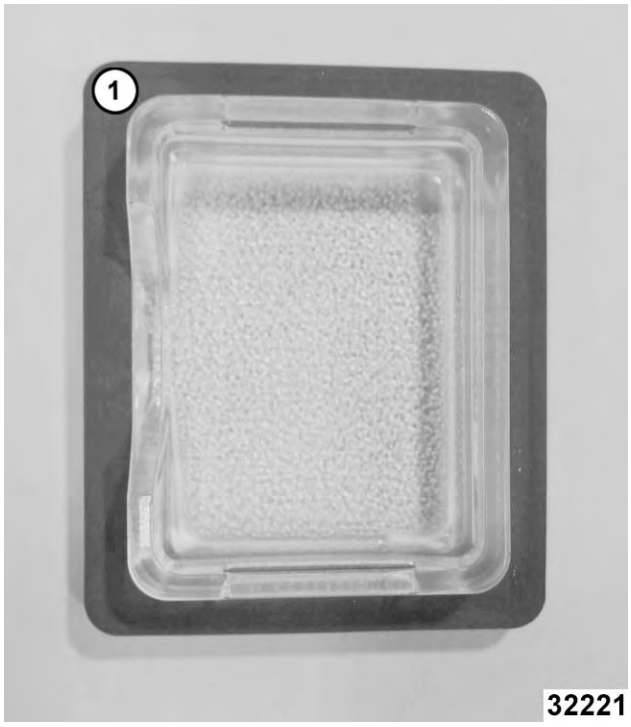

Fig. 51

Lamp Assembly Replacement



⚠ WARNING

Disconnect the electrical power to the machine and follow lockout / tagout procedures.

1. Remove racks.
2. Remove BULB if reusing.
3. Lift right side rack guide off oven cavity.
4. Pull lamp cover off from the top or bottom.
5. Insert narrow blade screwdriver into tab and bend out to release. Repeat with second tab.

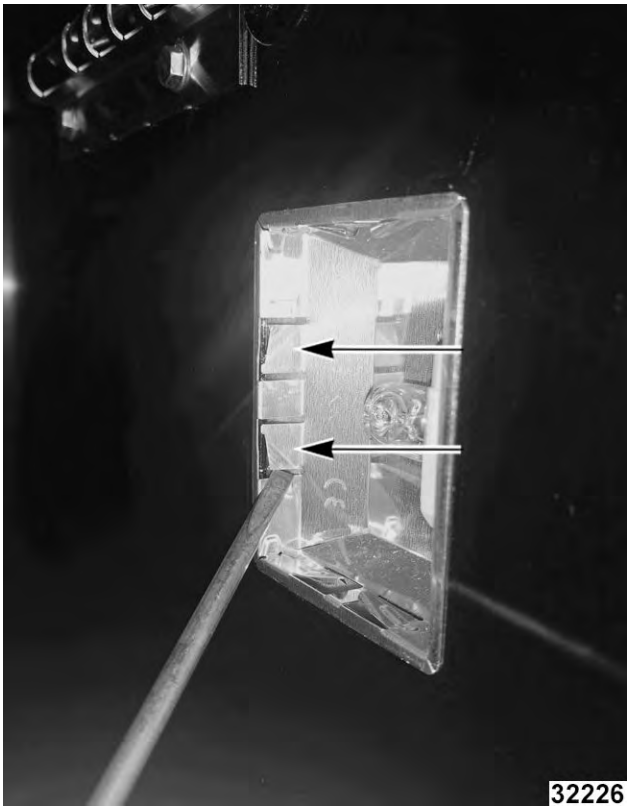

Fig. 52

6. Pull lamp housing out of oven cavity.
7. Disconnect wires.

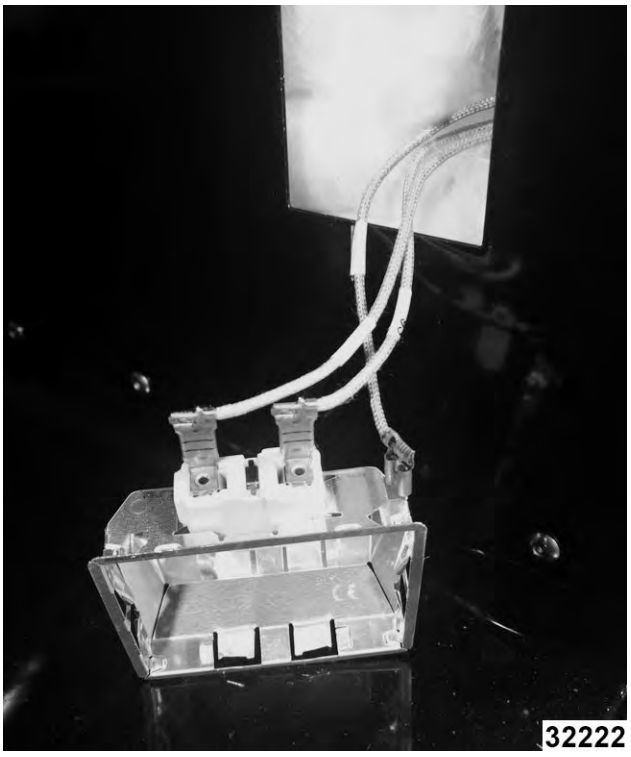

Fig. 53

8. Reverse procedure to install.

NOTE: Verify gasket (1, Fig. 54) is flat on lamp cover and not damaged.

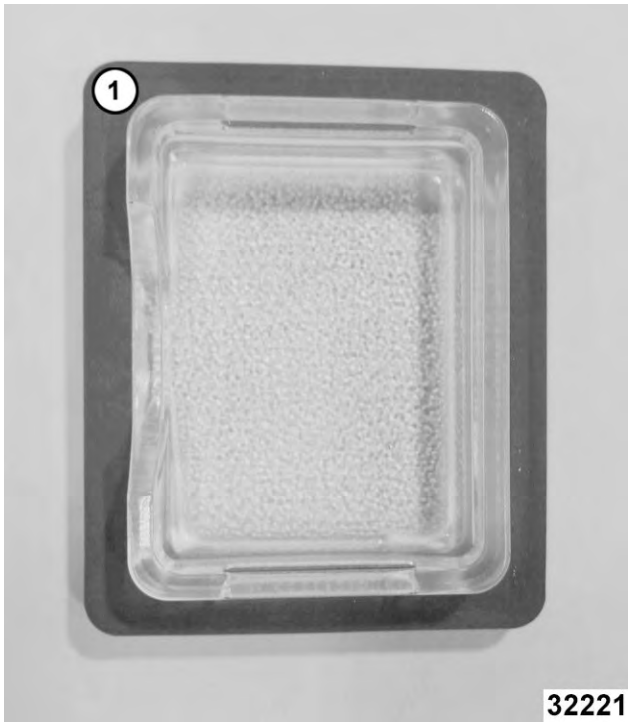

Fig. 54

COOLING FAN



⚠ WARNING

Disconnect the electrical power to the machine and follow lockout / tagout procedures. There may be multiple circuits. Be sure all circuits are disconnected.

1. Remove the right side panel as outlined under COVERS AND PANELS.

NOTE: If right side panel is not accessible, this component can be serviced by removing the control panel as outlined under COVERS AND PANELS.

2. removing wire nuts.

3. Remove the screws securing the air deflector to the fan then loosen the tab screw holding the fan to the component panel. Rotate the tab so that the fan will clear and remove the fan.

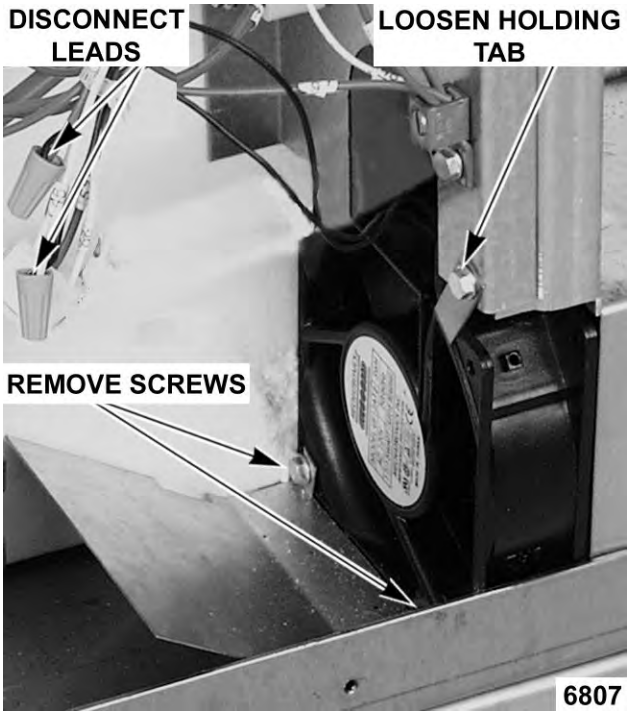

Fig. 55

4. Reverse the procedure to install the replacement fan and check for proper operation.

NOTE: The fan must be installed so air is pulled from outside the rear of the oven and blown into the control area. The arrow on the fan body indicates "air flow" direction and should be pointing toward the controls.

NOTE: Ensure fan is seated "squarely" against the air tube and the oven bottom.

NOTE: The air deflector should be angled upwards at approximately 30 degrees to properly direct the air flow.

SERVICE PROCEDURES AND ADJUSTMENTS



⚠ WARNING

Certain procedures in this section require electrical test or measurements while power is applied to the machine. Exercise extreme caution at all times and follow Arc Flash procedures. If test points are not easily accessible, disconnect power and follow Lockout/Tagout procedures, attach test equipment and reapply power to test.

SOLID STATE TEMPERATURE CONTROL CALIBRATION

1. Place a thermocouple in geometric center of oven cavity.
2. Set ON-OFF-COOL DOWN switch to ON.
3. Set temperature control dial to 350°F.
4. Allow oven temperature to stabilize (normally 3 cycles).
5. Record temperature at which Heat lamp goes OFF and comes ON for at least two complete heating cycles.
6. Calculate differential by subtracting temperature indicated when lamp goes out from temperature indicated when lamp comes on.

   Differential = Heat lamp OFF - Heat lamp ON

   Example: 360° (lamp off) - 340° (lamp on) = 20°

   A. Calculated differential should be **less** than 20°F.

      1) If differential is **less** than 20°F, temperature control circuit is functioning properly.

         a. Proceed to Step 7.

      2) If differential is **more** than 20°F:

         a. Check temperature probe as outlined under TEMPERATURE PROBE TEST (SOLID STATE CONTROL).

         b. If probe is functioning properly then temperature control is malfunctioning.

            a) Install a replacement temperature control and check calibration.

7. Calculate average temperature by adding temperature indicated when lamp goes out to temperature indicated when lamp comes on and dividing this answer by 2.

   [Temp. (lamp off) + Temp. (lamp on)] ÷ 2 = Average Temp. Example: (360° + 340°) ÷ 2 = 350°

   A. If average temperature is **less** than 10°F from dial setting, thermostat is properly calibrated.

   B. If average temperature is **more** than 10°F from dial setting, thermostat calibration must be adjusted.

      1) Loosen temperature control knob set screw and remove knob from stem.

      2) Access adjustment potentiometer located at 3 o'clock position (Fig. 56).

NOTE: If no access hole exists in overlay, you may carefully create one.

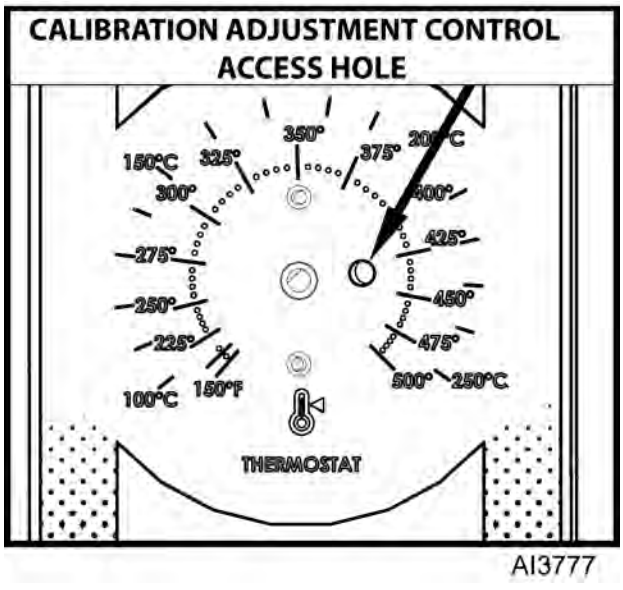

Fig. 56

   a. Turn *clockwise* to increase, *counterclockwise* to decrease temperature

b. Repeat average temperature calculation in Step 7.

NOTE: Allow oven to cycle at least two times between adjustments before performing calculation.

a) If average temperature still differs **more** than 10°F from dial setting, adjust thermostat calibration until average temperature is within tolerance.

C. If above adjustment cannot be obtained, replace temperature control and check calibration.

MECHANICAL (KX) THERMOSTAT CALIBRATION

1. Place a thermocouple in the geometric center of the oven cavity.
2. Set the power switch to ON.
3. Set the thermostat dial to 350°F.
4. Allow the oven temperature to stabilize (normally 3 cycles).
5. Record the temperature when the thermostat cycles OFF and ON for at least three complete cycles.
6. Calculate the differential by subtracting the temperature indicated when heat lamp goes out from temperature indicated when heat lamp comes on.

   Differential - Heat lamp OFF - Heat lamp ON. Example: 360° (lamp off) - 340° (lamp on) = 20°

   A. The differential calculated should be less than 30°F.

      1) If the differential is 30°F or less, the thermostat is functioning properly. a. Proceed to step 7.

         a. Proceed to step 7.

      2) If the differential is more than 30°F, the thermostat is malfunctioning.

         a. Install a replacement thermostat and check calibration.

7. Calculate the average temperature by adding the temperature indicated when the heat lamp goes out to the temperature indicated when the heat lamp comes on and dividing this answer by 2.

   [Temp. (lamp off) +Temp. (lamp on)] + 2 = Average Temp. Example: 360° + 340° +2 = 350°

   A. If the average temperature is 15°F or less from the dial setting, the thermostat is properly calibrated.

   B. If the average temperature is more than 15°F of the dial setting, the thermostat calibration **must** be adjusted.

      1) Remove the thermostat knob.

      2) Hold the thermostat shaft and turn the inner set screw *clockwise* to decrease temperature or *counterclockwise* to increase temperature (¼ turn = 35°F).

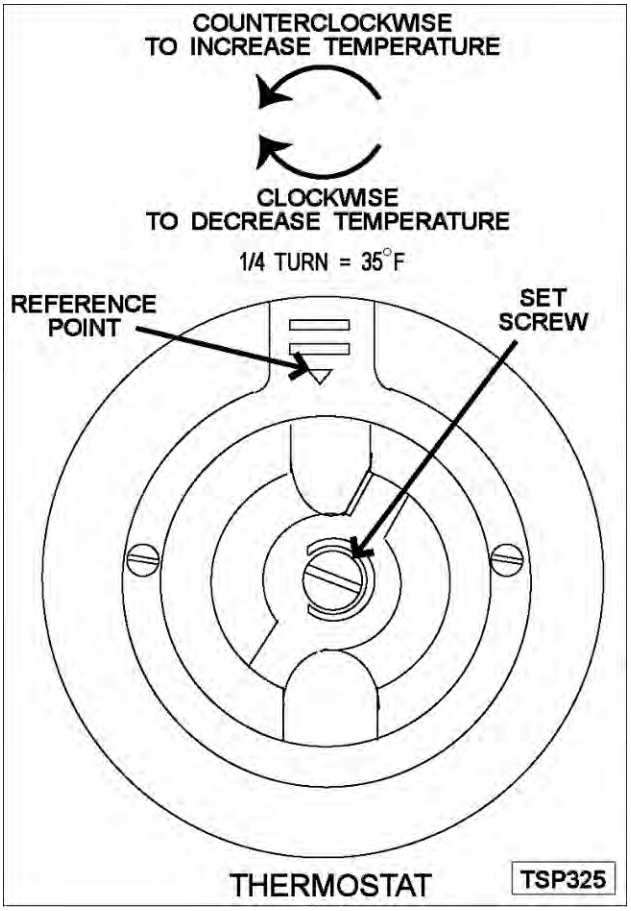

Fig. 57

8. Replace the knob and verify the setting is still at 350°F.
9. Repeat step 7 until the average temperature is within tolerance.

NOTE: Allow the oven to cycle at least two times between adjustments before performing the calculation.

A. After the final adjustment is made and the average temperature is within tolerance, remove the knob and apply a nonpermanent type sealer around the head of the set screw

10. If the above adjustment cannot be obtained:

A. Turn the power switch OFF.



⚠ WARNING

Disconnect the electrical power to the machine and follow lockout / tagout procedures. There may be multiple circuits. Be sure all circuits are disconnected.

B. Install a replacement thermostat and check calibration.

SOLID STATE TEMPERATURE CONTROL TEST



⚠ WARNING

Certain procedures in this section require electrical test or measurements while power is applied to the machine. Exercise extreme caution at all times and follow Arc Flash procedures. If test points are not easily accessible, disconnect power and follow Lockout/Tagout procedures, attach test equipment and reapply power to test.

1. Remove the RIGHT SIDE PANEL.

NOTE: If right side panel is not accessible, this component can be serviced by removing CONTROL PANEL.

2. Place a thermocouple in the geometric center of the oven cavity.

NOTE: Oven temperature must be below 450°F.

NOTE: If oven is equipped with "Cook and Hold" option, set to Cook (normal cooking) before continuing.

3. Set the temperature control to the maximum setting.

4. Check machine data plate for correct voltage to oven. Refer to diagram below for proper terminal locations and voltages before checking the control. Use the correct terminals for the corresponding voltage.

5. Turn the power switch to ON.

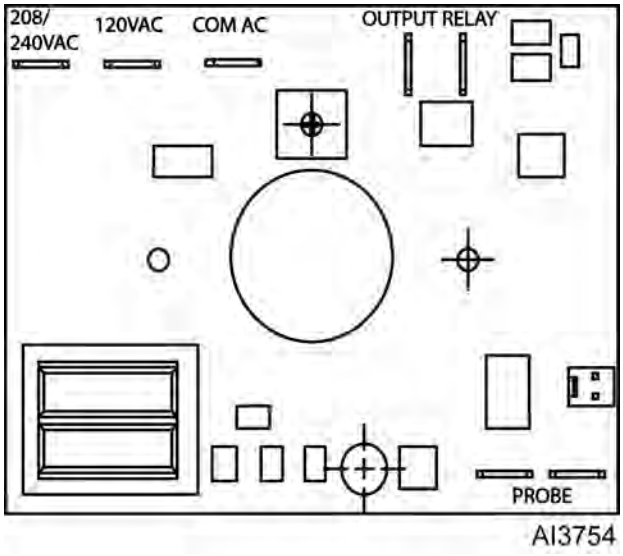

Fig. 58

6. Check for proper voltage across terminals COM AC to 120VAC or COM AC to 208-240VAC for power to the control.

   A. If correct, proceed to step 7.

   B. If incorrect, problem is **not** with the temperature control. See TROUBLESHOOTING.

7. Check relay voltages on the board:

   A. For 120VAC controls - check across OUTPUT RELAY terminal (left side) to 120 VAC terminal for input to the internal relay. Check across OUTPUT RELAY terminal (right side) to 120 VAC for output from the internal relay.

   B. For 208-240VAC controls - check across OUTPUT RELAY terminal (left side) to 208-240 VAC terminal for input to the internal relay. Check across OUTPUT RELAY terminal (right side) to 208-240 VAC for output from the internal relay.

      1) If input voltage to the internal relay is correct, proceed to step 8. If input voltage to the internal relay is not present, problem is not with the temperature control. See TROUBLESHOOTING.

      2) If output voltage from the internal relay is correct proceed to step 8. If output voltage from the internal relay is not correct, check temperature probe as outlined under TEMPERATURE PROBE TEST (SOLID STATE CONTROL).

8. Set the temperature control to the minimum setting.

NOTE: Oven temperature **must** be above 300°F.

9. Check for zero (0) volts AC across terminals OUTPUT RELAY terminal (right side) to 120 VAC or OUTPUT RELAY terminal (right side) to 208-240 VAC for no output from the internal relay.

   A. If correct, temperature control is functioning properly.

   B. If incorrect, check temperature probe as outlined under TEMPERTURE PROBE TEST (SOLID STATE CONTROL).

      1) If temperature probe is OK:

         a. Turn the power switch OFF.



⚠ WARNING

Disconnect the electrical power to the machine and follow lockout / tagout procedures.

         b. Replace the temperature control and check calibration as outlined under SOLID STATE TEMPERATURE CONTROL CALIBRATION.

TEMPERATURE PROBE TEST (SOLID STATE CONTROL)



⚠ WARNING

Disconnect the electrical power to the machine and follow lockout / tagout procedures. There may be multiple circuits. Be sure all circuits are disconnected.

NOTE: The temperature probe used in conjunction with the Solid State Temperature control is an RTD (resistance temperature detector) of the Thermistor type. As temperature increases the resistance value decreases.

1. Remove the right side panel as outlined under COVERS AND PANELS in REMOVAL AND REPLACEMENT OF PARTS.

NOTE: If right side panel is not accessible, this component can be serviced by removing the control panel as outlined underCOVERS AND PANELS.

2. Place a shielded thermocouple in the geometric center of the oven cavity and determine the temperature in the oven cavity.
3. Remove the probe lead wires from the solid state temperature control.
4. Test the probe with an ohmmeter.

   A. If the measured resistance values are inside the given tolerance then the probe is functioning properly.

   B. If the measured resistance values are outside the given tolerance then replace the probe and retest.

      1) Check oven for proper operation.

5. Reverse procedure to install.

TEMP (°F)	OHMS *	TEMP (°F)	OHMS *
77	90,000	360	822
240	4,077	380	656
260	3,016	400	529
280	2,266	425	424
300	1,726	450	334
320	1,332	475	266
340	1,041		

*** Resistance in ohms ± 10%**

HEATING ELEMENT TEST



⚠ WARNING

Disconnect the electrical power to the machine and follow lockout / tagout procedures. There may be multiple circuits. Be sure all circuits are disconnected.

1. Turn the power switch ON and set the oven temperature control to the highest setting.
2. Measure the voltage at the heating element terminals and verify it against the data plate voltage.
   A. If voltage is incorrect, find the source of the problem.
   B. If voltage is correct, check current draw (amps) through the heating element lead wires.
      NOTE: This method is preferred over a resistance check when a clamp on type amp meter is available.
      1) If current draw is correct then heating element is functioning properly.
      2) If current draw is not correct, turn the power switch OFF and disconnect the electrical supply to the oven.
         a. Replace HEATING ELEMENTS Ending at Serial Number 481916863.
   C. If unable to check current draw, a resistance check may indicate a malfunctioning element.
      1) Turn the power switch OFF and disconnect the electrical supply to the oven.
      2) Remove the lead wires from the heating element and check resistance (ohms).
3. Check for proper operation.

SIDE MOUNTED ELEMENTS			
VOLTAGE	**AMPS PER ELEMENT**	**KW PER ELEMENT**	**OHMS PER ELEMENT**
208 (red)	9.6	2	21.6
240 (blue)	8.3	2	28.8
NOTES:	1. Values in the table are nominal. Tolerance is +5/-10%. 2. Voltage values are @ 60HZ 3. Resistance values (ohms) are @ room temperature. 4. Color coding located on the one corner of mounting bracket.		

REAR MOUNTED ELEMENTS			
VOLTAGE	**AMPS PER ELEMENT**	**KW PER ELEMENT**	**OHMS PER ELEMENT**
208	19.2	4	10.8
240	16.6	4	14.4
NOTES:	1. Values in the table are nominal. Tolerance is +5/-10%. 2. Voltage values are @ 60HZ 3. Resistance values (ohms) are @ room temperature. 4. Replaced as a set, check individually.		

BLOWER ADJUSTMENT



⚠ WARNING

Disconnect the electrical power to the machine and follow lockout / tagout procedures. There may be multiple circuits. Be sure all circuits are disconnected.

1. Remove the blower motor and mounting assembly by following steps 1 through 7 as outlined under BLOWER AND MOTOR in REMOVAL AND REPLACEMENT OF PARTS.
2. Loosen the motor mounting bolts.
3. Adjust the motor position until the blower is parallel to and 1/4 inch away from the motor mounting plate. Check for squareness of the blower to the motor mounting plate at the top, bottom, left and right of the blower.
   A. If the blower is square then tighten motor mounting bolts and proceed to step 4.
   B. If the blower is not square continue adjusting until proper spacing is achieved then tighten motor mounting bolts

NOTE: If necessary, place shims between motor and frame.

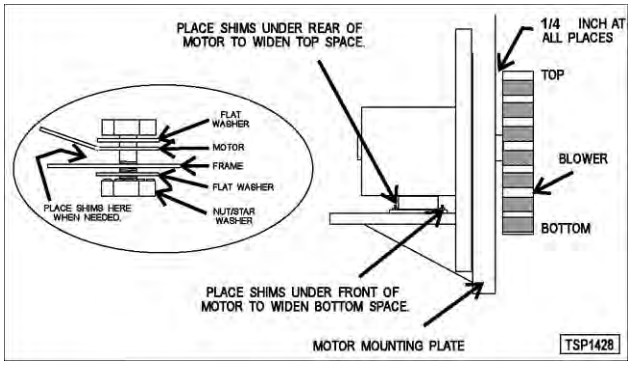

Fig. 59

4. Reverse the procedure to install.

DOOR ADJUSTMENT

1. Check the doors to make sure they have a .125 (1/8") gap between them and that the vertical edge of the door is parallel to the vertical door seal. If the doors are not positioned in this manner, adjust the doors as described.

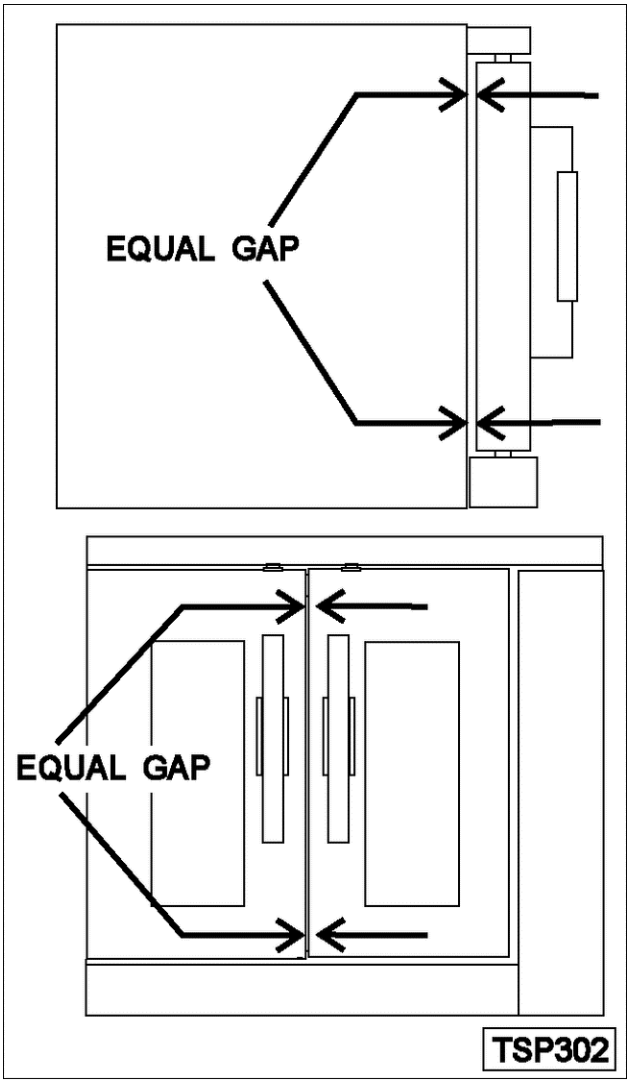

Fig. 60

2. Remove the TOP FRONT COVER.
3. Loosen the screws/bolts that secure the upper door brackets just enough to allow door movement.

   Figure Shown below (Left Side) is ending at Serial Number 481916782.

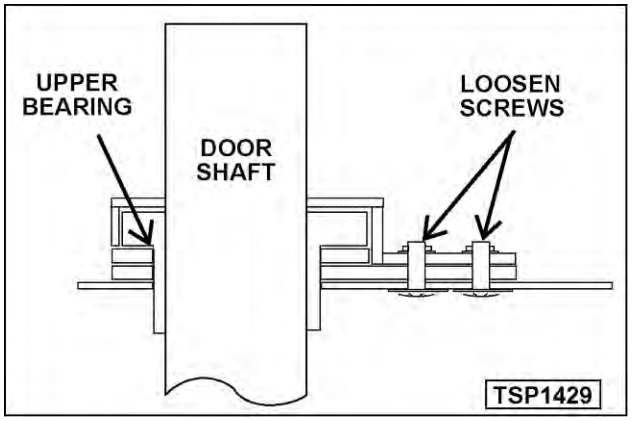

Fig. 61

Figure shown below (Left Side) is starting at Serial Number 481916783.

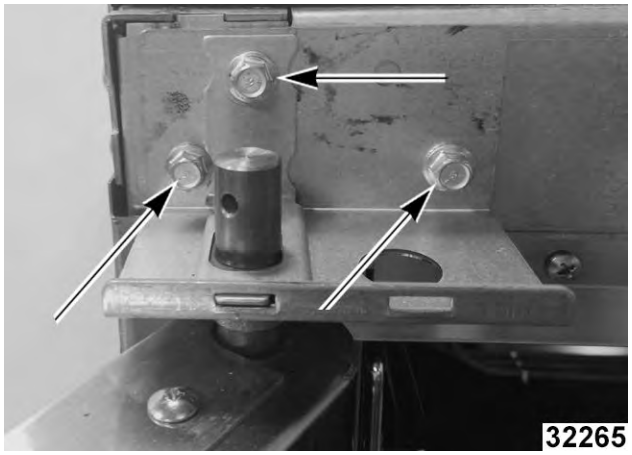

Fig. 62

4. Move the door until proper alignment is achieved then tighten the screws/bolts on the upper door bearing hardware.
5. Repeat Step 3 and Step 4 on the opposite door, if necessary.
6. Install TOP FRONT COVER.

DOOR STRIKE ADJUSTMENT (INDEPENDENT DOORS)

NOTE: For units with serial number starting with 48 made after 8/12/07 and serial number starting with 54 made after 8/26/07.



⚠ WARNING

Disconnect the electrical power to the machine and follow lockout / tagout procedures. There may be multiple circuits. Be sure all circuits are disconnected.

1. Remove top front cover as outline under COVERS AND PANELS in REMOVAL AND REPLACEMENT OF PARTS.
2. Open the doors and inspect door strike for proper shape.
   A. Replace if bent. Do not bend strike plate.
   B. If adjustment is necessary, loosen fasteners, close doors and insure contact between door inner surface and upper horizontal seal. Slide door strike plate until contact with roller latch is made. Tighten strike plate fasteners

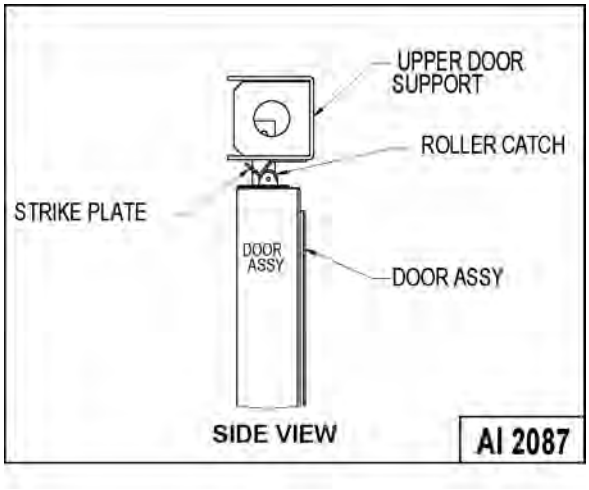

Fig. 63

3. Open and close the doors several times while observing the roller latch and strike plate operation.
   A. Replace roller latch if malfunctioning as outlined under ROLLER LATCH ASSEMBLY (INDEPENDENT DOORS) and adjust as outlined in this procedure.
4. Each oven door should open with a force of 8 to 25 pounds when pulled at the handle. The adjustments must allow the doors to remain closed during normal operation and allow opening without exertion by the user.

DOOR CATCH ROLLER ADJUSTMENT (INDEPENDENT DOORS)

NOTE: For units with serial number starting with 48 made before 8/13/07 and serial number starting with 54 made before 8/27/07.



⚠ WARNING

Disconnect the electrical power to the machine and follow lockout / tagout procedures. There may be multiple circuits. Be sure all circuits are disconnected.

1. Remove the top front cover as outline under COVERS AND PANELS in REMOVAL AND REPLACEMENT OF PARTS.
2. Open the doors and inspect the door strike for proper shape.

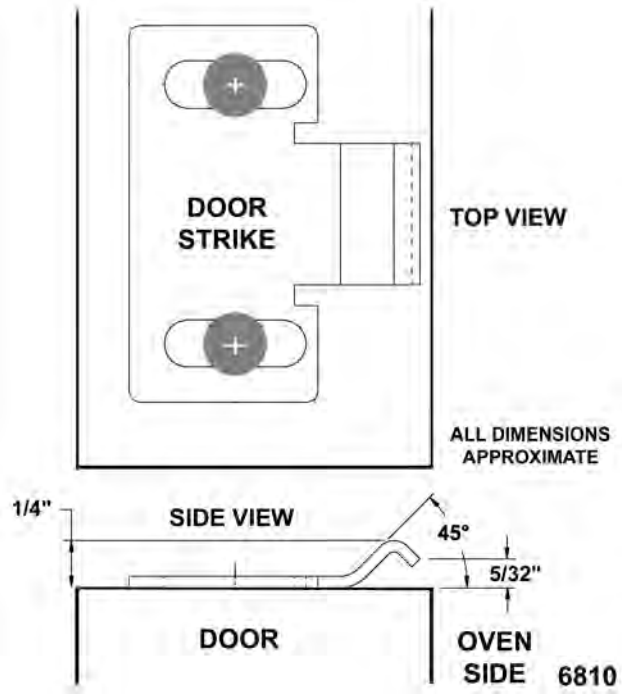

Fig. 64

   A. Replace if bent and adjust as outlined in this procedure.

3. Open and close the doors several times while observing the catch roller operation.

   A. Replace if malfunctioning and adjust as outlined in this procedure.

NOTE: Shims may be required under the door strike to raise it, before the proper door tension adjustment can be set.

4. Apply lubricant around the spring. See LUBRICATION under GENERAL.
5. Close the doors and check them for proper alignment.

   A. Doors should be centered and parallel at the top and bottom, in the oven cavity opening. See DOOR ADJUSTMENT.

6. With the doors closed, observe the position of the catch roller "ball" in relation to the door strike.

   A. Ensure the catch roller "ball" is centered (left to right) to the door strike.

      1) Adjust alignment, if necessary.

   B. Open the right side door and view the left side door catch roller and strike. Ensure the door catch roller "ball" is resting upon the angular surface of the door strike. Repeat on the opposite door.

      1) If adjustment is necessary, loosen the mounting screws then slide the door strike from "front to back" until the roller rests upon the angular surface of the door strike. Tighten screws and check operation.

      2) If proper adjustment cannot be achieved, add shims beneath the door strike. Repeat step 6 thru this step.

NOTE: DO NOT BEND THE DOOR STRIKE.

7. Each oven door should open with a force of 8 to 25 pounds when pulled at the handle. See TOOLS under GENERAL.

   A. Adjust catch roller tension as follows:

      1) Turn the set screw inside the catch assembly housing *clockwise* to increase tension on the catch roller and *counterclockwise* to decrease tension on the catch roller.

NOTE: The amount of tension on the catch roller determines the opening force of the door.

      2) Continue adjustment until proper door operation is achieved.

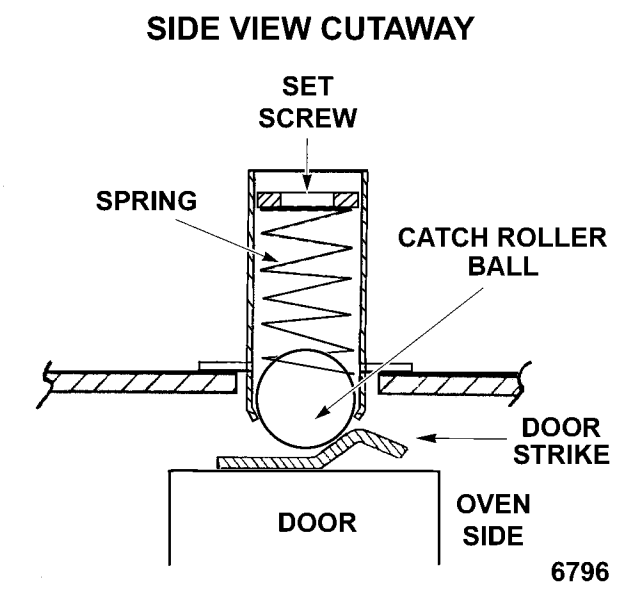

Fig. 65

DOOR SWITCH ADJUSTMENT



⚠ WARNING

Disconnect the electrical power to the machine and follow lockout / tagout procedures. There may be multiple circuits. Be sure all circuits are disconnected.

1. Remove the top front cover as outlined under COVERS AND PANELS in REMOVAL AND REPLACEMENT OF PARTS.
2. Door operation:
   A. Independent doors - The switch actuator should be operated by the switch lever when the right door is between 1" and 1 1/2" from being closed.
   B. Simultaneous doors - The switch actuator should be operated by the switch lever when the right door is 1/2" from being closed.
3. If adjustment is necessary, bend the switch actuator to obtain the proper setting.

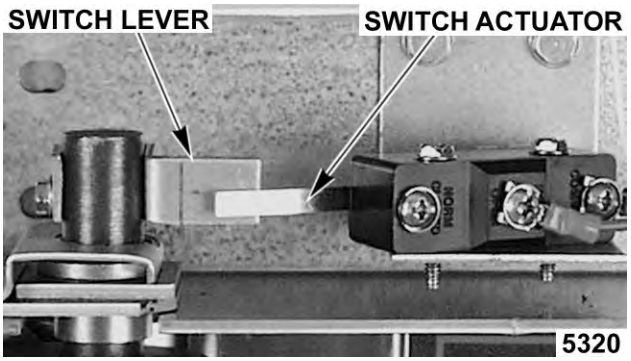

Fig. 66

4. Install the top front cover.
5. Apply power to the oven and check for proper operation.

DOOR CHAIN ADJUSTMENT (SIMULATANEOUS DOORS)

Introduction

When the oven doors are in proper adjustment, as the doors come together, the right door will lead the left door in closing by about 1/4 inch. The doors will feel like they are self closing the last 1/2 inch of travel.

Procedure

1. Remove the lower sill cover as outline under COVERS AND PANELS in REMOVAL AND REPLACEMENT OF PARTS.
2. Close doors and check door chain for factory setting.
   A. Turnbuckles should be 5 to 5 1/2 inches apart.
   B. Short eye bolt should be connected to the end of the chain that goes to the front of the sprocket.
   C. 2 links of the chain should not be engaged at the rear of the sprocket.
   D. Chain must be tight enough that the doors move simultaneously when opened or closed.
   E. When the doors are opened, the turnbuckles will move away from each other.
   F. The stop cable must be positioned where it moves freely and does not get pinched.
3. Position door chain assembly to factory setting if the conditions in step 2 are not met.

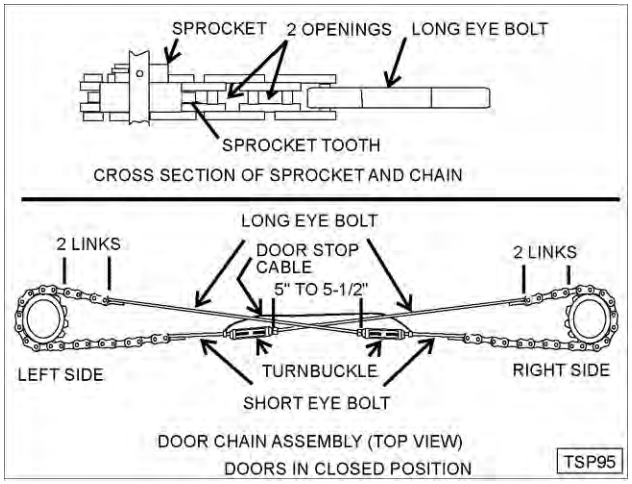

Fig. 67

4. If right door does not lead the left door in closing:
   A. Loosen locknuts on both turnbuckles.
   B. Loosen left turnbuckle.
   C. Tighten right turnbuckle.
   D. Tighten locknuts on both turnbuckles.
5. If the right door leads the left door by more than 3/8 inch:
   A. Loosen locknuts on both turnbuckles.
   B. Loosen right turnbuckle.
   C. Tighten left turnbuckle.
   D. Tighten locknuts on both turnbuckles.
6. Check door for proper operation.

NOTE: The locknuts must be tight during testing or the adjustment will not hold.

   A. If doors do not close properly, repeat step 4, 5 and 6.
   B. If doors operate properly, continue to step 7.

7. Install the lower front cover.

COMPUTER CONTROL

Operation

Refer to the Instructions Manual F31159 for specific operating instructions.

Setup Mode

NOTE: Use the setup mode to verify that the control is configured to the factory settings which result in the proper operation of the oven. If the CAL1 parameter is other than zero, determine if it is still needed before resetting to zero. See COMPUTER CONTROL TEMPERATURE CALIBRATION.

NOTICE

Changing the C_F, InP1, rL1 & rH1 parameters will default **all** menus to the factory settings.

1. Use this key sequence to access the setup mode.

   Up arrow; Rack 1; Temperature; Temperature; Down arrow; Rack 1

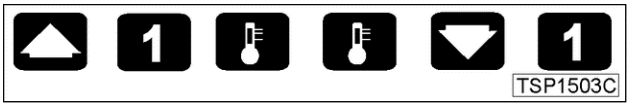

Fig. 68

2. Once in the setup mode the display will alternate between the parameter and programmed data.
   - To change data to the factory setting, use the arrow keys.
   - To select the next parameter, press the Rack 1 key.
   - After the last Parameter and Data is viewed, press the Rack 1 key a final time to exit the setup mode and return to operations mode. The current set point temperature will be displayed.
   - After 1 minute of no key activations, the control will return to operation mode.
3. Listed are the parameters and data you should find.

MENU	ALTERNATING ON DISPLAY	
	PARAMETER	DATA
Celsius_Fahrenheit	C_F	F
Guard Band	gb	4000
Temperature Compensation	tcnP	OFF
Input Type 1	InP1	J
Range Low 1	rL1	75
Range Hight 1	rH1	500
Hysteresis	HYS1	3
Calibration Offset	CAL1	0
Exit Setup Mode and returen to Operation Mode.	Set point temperature is displayed or if call for heat, dashers(---) displayed.	

Probe Test

If the oven is not heating or displaying the proper temperature, the temperature probe may be malfunctioning. Determine if the probe is good or causing the operational problem. Temporarily, disconnect the existing probe lead wires from the computer control and connect the lead wires from a known good "J" type thermocouple. Secure the sensing end of the thermocouple near the probe.

Turn the power switch ON and set the dial to 350°F.

If the oven reaches the set temperature and cycles with the temporary thermocouple, then the existing probe is malfunctioning. Replace temperature probe with the correct part and check for proper operation.

Solid State Relay Test

The solid state relays "SSR1 or SSR2" supply power to the blower motor "high" or "low" fan speed terminals when the SSR is energized by the output voltage from the computer.

To test solid state relay "SSR1" (high fan speed), the computer control should be in the "Normal Cooking Mode". To test solid state relay "SSR2" (low fan speed), the computer control should be in the "Roast & Hold Mode".

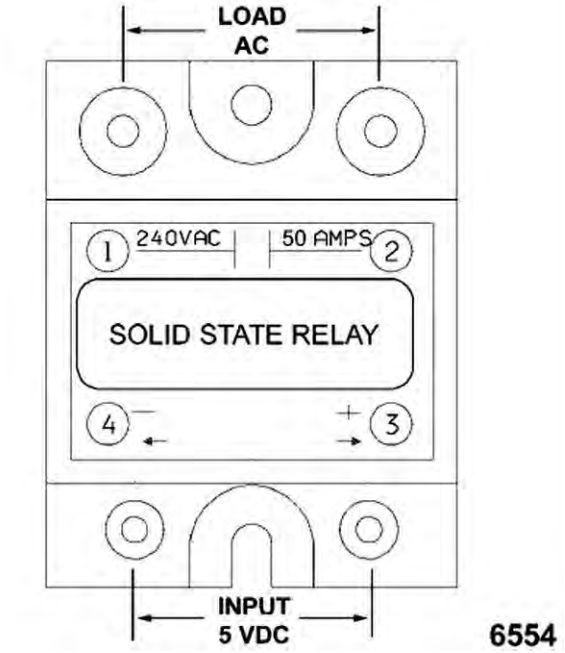

Fig. 69

1. Remove the right side panel as outlined under COVERS AND PANELS.
2. Turn the power switch ON.
   A. If the blower motor comes on, the SSR is functioning properly.
   B. If the blower motor does not come on, proceed to step 3.
3. Check for +5 VDC on the input side of SSR (terminals 3 & 4).
   A. If +5 VDC is present, continue to step 4.
   B. If no voltage is present, computer control is not functioning properly.
4. Check for proper input voltage on the load side of SSR terminal 1 and the power connection on the other side of the supply.
   A. On 208 & 240 volt ovens, the supply connection is on the terminal block (L2 for single phase, L3 for three phase). The measured voltage should be identical to the supply.
   B. On 480 volt ovens, the supply connection is on the secondary side of the 480V transformer, terminal X4 (wire # 79).

   The measured voltage should be 240 volts.
5. If input voltage is correct on the load side of SSR terminal 1, proceed to step 6.
   A. If input voltage is **not** correct, find the source of the problem.
6. Check output voltage on the load side of SSR terminal 2.
   A. If voltage is correct, SSR is functioning properly.
   B. If no voltage is present on the load side of SSR terminal 2, the SSR is **not** functioning properly.
7. Turn the power switch OFF.



⚠ WARNING

Disconnect the electrical power to the machine and follow lockout / tagout procedures. There may be multiple circuits. Be sure all circuits are disconnected.

8. Replace the SSR and check for proper operation.

COMPUTER CONTROL TEMPERATURE CALIBRATION

1. Place a thermocouple in the geometric center of the oven cavity.
2. Turn the power switch ON.

A. If the set point temperature is 350°F, proceed to step 4.

B. If the set point temperature is other than 350°F, proceed to step 3 to change the temperature.

3. Press the set key then temperature key to enter the temperature set mode.

   A. The display will alternate between the term "StPt" (set point) and the current oven temperature setting.

   B. Press the up or down arrow keys to make the proper selection.

   C. Press the set key again to save the change and exit the temperature set mode.

4. Allow the oven temperature to stabilize (normally 3 cycles).

5. Compare the controls set point temperature to the thermocouple meter reading when the heat light goes out.

   A. A temperature variance **more** than 5°F indicates an adjustment is needed.

      1) To make the adjustment, proceed to step 6.

      2) If temperature variance is **less** than 5°F, computer control is functioning properly.

6. Enter the setup mode as outlined in SETUP MODE under COMPUTER CONTROL.

   A. Advance through the menu until CAL1 (Calibration Offset) appears.

      1) If the thermocouple reading is higher than set point temperature, press the down arrow key and enter a **negative** offset value that is equal to the number of degrees above the 5°F tolerance.

      2) If the thermocouple reading is lower than set point temperature, press the up arrow key and enter a **positive** offset value that is equal to the number of degrees below the 5°F tolerance.

      3) Exit the setup mode.

7. Allow the oven to cycle at least two times between adjustments.

   A. If the temperature variance still differs more than 5°F from the set point, verify the correct calibration offset value was entered and retained.

      1)) Adjust the calibration offset value as outlined in step 6, until the cycling temperature is within tolerance.

   B. If the above adjustment cannot be obtained:

   C. Turn the power switch OFF.



⚠ WARNING

Disconnect the electrical power to the machine and follow lockout / tagout procedures. There may be multiple circuits. Be sure all circuits are disconnected.

   D. Replace the computer control and check for proper operation.

COMPUTER CONTROL OPERATIONAL TEST

The computer controls "Calibration Mode" is used to manually test:

- Outputs of the control
- Keypad functionality
- Verify display and LEDs functionality

Additionally, if a problem is encountered during the output test, a "Restore Factory Settings" option is available.

NOTICE

The calibration mode contains several adjustable parameters that must **not** be changed. For the "CALY" (Calibration) Parameter, the default data option selected must be "no".

Listed below are the parameters and data you should find in the calibration Mode.

MENU	ALTERNATING ON DISPLAY	
	PARAMETER	DATA
Calibrate (must display no)	CALY	no
Logic Output Test (see step 3)	LgOt* *g displays as a 9	0
Logic Inputs "LI" (Factory Only)	LI	21
Keyboard (see step 4)	HEY	0

MENU	ALTERNATING ON DISPLAY	
	PARAMETER	DATA
Display Test (Al segments of display and the LED's are tested)	—	sequence of characters in display window
Exit Calibration Mode and return to Operation Mode	Set point temperature is displayed or if call for heat, dashers (---) displayed.	

NOTE: While in the calibration mode, on all parameters except the Logic Output Test (LgOt), the control outputs will be OFF.

- To change the programmed data, use the arrow keys.
- To select the next parameter, press the Rack 1 key.
- At the end of the test, the control automatically exits the Calibration Mode and returns to the Operation Mode.
- After 1 minute of no key activations, the control will return to operation mode.

1. Use this key sequence to access the calibration mode. Up arrow; Down arrow; Rack 1; Down arrow; Temperature; Rack 1.



Fig. 70

2. Once in the calibration mode the display will alternate between the parameter and programmed data. The computer control outputs are turned OFF.
   A. Convection fan stops.
   B. Heating stops.

NOTE: If the control was calling for heat when the calibration mode was entered, heating will resume after exiting the test mode.

3. Press the Rack 1 key to accept the default "no" under the "CALY" (calibrate) parameter and advance the display menu to the "LgOt" (logic output) test. In this mode, the control and logic outputs can be turned ON for testing only.
   A. Use the arrow keys to change the display to the appropriate number for testing. Each test starts automatically, several seconds after number is selected.
      1) #0 - All control outputs are OFF (fan & heat OFF).

         #1 - Heat comes ON (2CON is energized).

         #5 - Convection fan comes ON (High or Low speed SSR is energized).

         #8 - Electronic beeper (external) sounds.
   B. If the output tests are completed successfully, proceed to step 4.
   C. If the output tests are **not** completed successfully, find the source of the problem. If the problem cannot be repaired, replace the component and check for proper operation.
4. Press the Rack 1 key twice to advance past the "LI" (Logic Inputs test) and reach the "HEY" (keyboard) test.
   A. Press the desired key to display the corresponding hexadecimal code. This code is used internally by the control to identify the key being pressed. See table below.

KEY	CODE	KEY	CODE
Up Arrow	40	Start/Stop	4
Down Arrow	80	Temp	20
½ menu	800	Rack 1	10 *
3/4 menu	4000	Rack 2	400
5/6 menu	2	Rack 3	2000
Set	200	Rack 4	1
Time	1000	Rack 5	8
Roast & Hold	8000		
*** Displays 10 momentarily then alternates between Hey and 0. If pressed again, advances to the next test.**			

   B. If the code displayed is not correct for the key pressed, then the keyboard is malfunctioning.
      1) Turn the power switch OFF.



⚠ WARNING

Disconnect the electrical power to the machine and follow lockout / tagout procedures. There may be multiple circuits. Be sure all circuits are disconnected.

C. Replace the computer control and check for proper operation.

5. Press the Rack 1 key to advance the display menu to the "dISP" (display) test. A test sequence automatically runs on the display and control LEDs for a visual verification that all segments in the LED display and the internal LEDs are functioning.

6. At the end of the test, the control exits the calibration mode and returns to the Operation Mode.

Restore Factory Settings

NOTE: If the computer control does not appear to be functioning properly, do not restore factory settings until verifying the control is configured properly as outlined in SETUP MODE under COMPUTER CONTROL and performing the COMPUTER CONTROL OPERATIONAL TEST as outlined in the above section.

1. Enter the "Calibration Mode" by using the key sequence stated in step 1 under COMPUTER CONTROL OPERATIONAL TEST.

   A. The computer control outputs are turned OFF.

   B. The display will alternate between "CALY" and "no".

2. Press the up or down arrow key until the "rESt" parameter displays.

3. Press the Rack 1 key and "no" displays.

4. Press the up or down arrow key to change the display to "YES".

5. Press the Rack 1 key to select this data option and then advance the menu to the "LgOt" (logic output test).

NOTE: The "g" in LgOt displays as a "9".

6. Press the Rack 1 key twice to advance past the "LI" (Logic Inputs test) and the "HEY" (keyboard) test.

7. The "dISP" (display) test sequence automatically runs.

8. At the end of the test, the control exits the calibration mode and returns to the Operation Mode.

9. Enter the "SETUP MODE" as outlined under COMPUTER CONTROL and perform the procedure.

SERVICE PROGRAMMING AND TESTING FOR 3700 COMPUTER CONTROL

NOTE: Press X to go back to previous screen. User interface system menu program instructions for **MENU PRG** and **USB** are located in COMPUTER CONTROLS GUIDE.

SYSTEM DIAGNOSTIC

1. Press **Program**.



Fig. 71

2. Press number **3** for **SYS DIAG.**

   • System Diagnostic menu will appear.

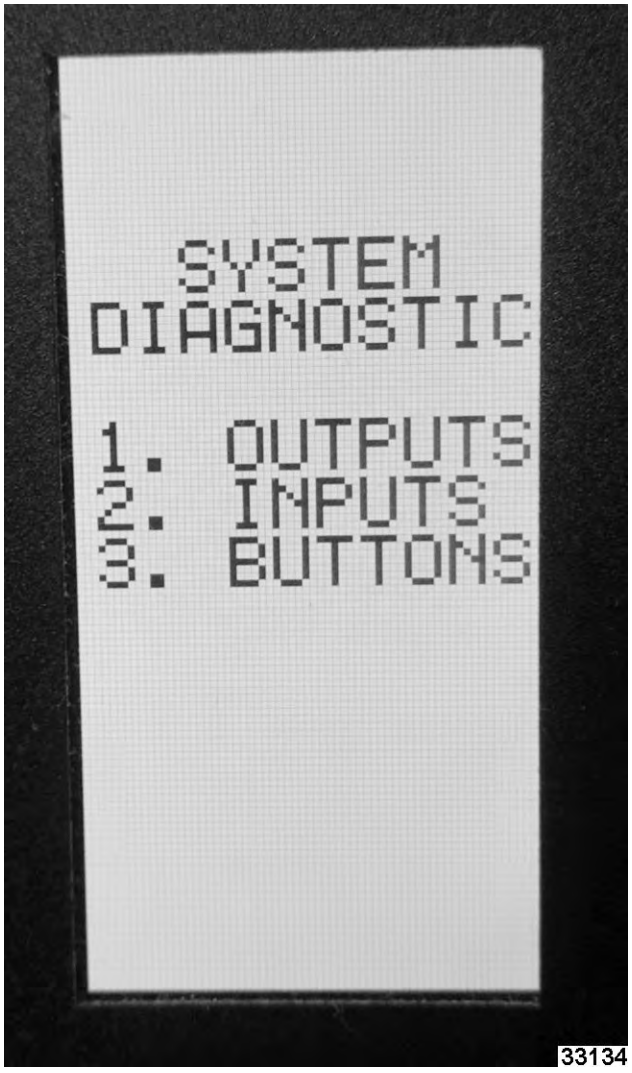

Fig. 72

- 1. **OUTPUTS**



Fig. 73

- Press corresponding number for testing function selection. Example: Press **1** to test Fan function.
- 2. **INPUTS**



Fig. 74

- Check status of a function. Example: Door is open or close.

- 3. **BUTTONS**

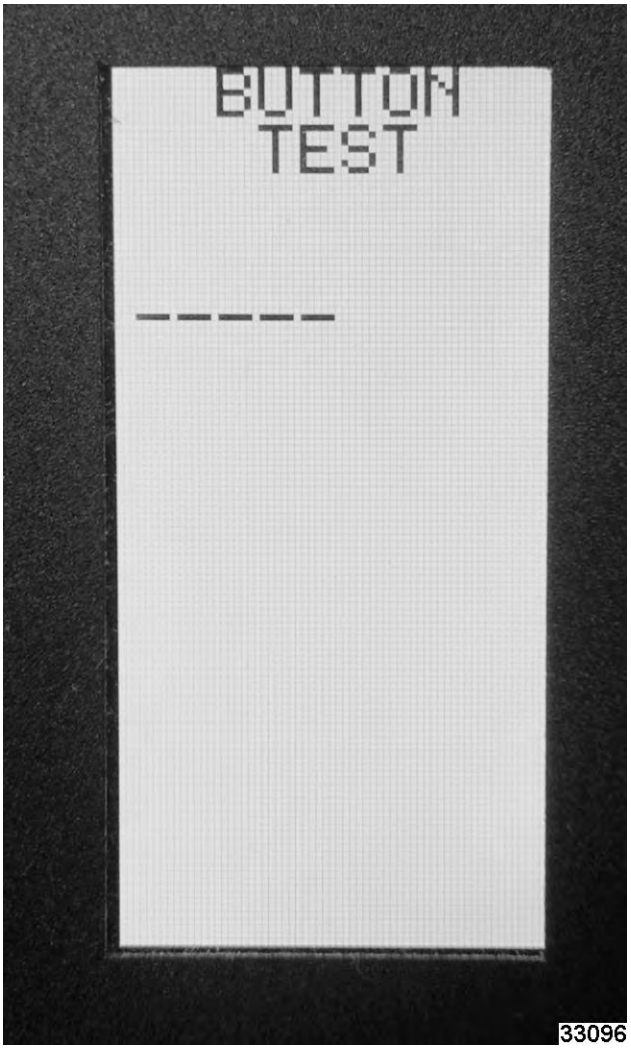

Fig. 75

- Button test verifies each button is programed and working. Example: Push a button on the keypad to verify it is connected and working. Each buttons function shows on display.

SYSTEM SETTINGS

1. Press **Program**.



Fig. 76

2. Press **4** for **SETTINGS**.
   - System Settings menu will appear.



Fig. 77

- Press corresponding number to change settings. Example: Press **4** to change **HEAT** to Electric.

SETTING TEMPERATURE OFFSET

- Check center of oven temperature with temperature tester.
- Press number **6**.
- Use arrow keys to offset **DISPLAY** temperature setting to match center of oven temperature.

ELECTRICAL OPERATION

COMPONENT LAYOUT AND FUNCTION WC4ED

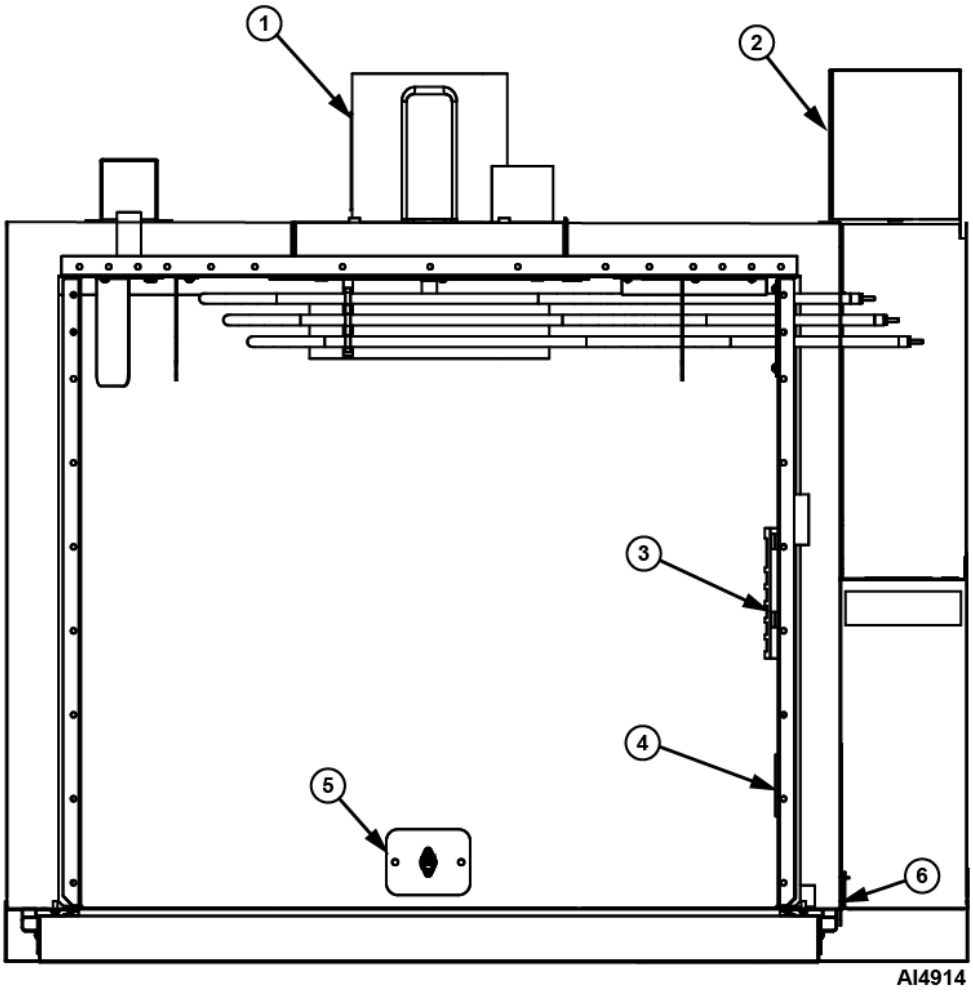

Fig. 78

Item	Description	Function
1	Blower Motor	Operates the oven cavity blower (convection fan).
2	Transformer	
3	Temperature Probe	Senses the oven temperature and converts the temperature into a resistance valve which is monitored by the temperature control board. The probe is an RTD (resistance temperature detector) of the Thermistor type. As temperature increases the resistance value decreases.
4	High Limit Thermostat	Protects the oven from temperatures above 550°F by removing power from the heating circuit. Auto resets at 500°F.
5	Heat Light	Lit whenever temperature control is calling for heat.
6	Control Panel	Contains all interactive controls for oven.
	NOT DISPLAYED	

Item	Description	Function
	Door Switch	Allows the oven to operate when the doors are closed but stops the oven from operating when the doors are opened.
	Cooling Fan	Circulates cooler air from outside the oven to cool components in the control area.
	Fuses	Protect control circuit.

CONTROL PANEL LAYOUT AND FUNCTION WC4ED (BEFORE APRIL 2024)

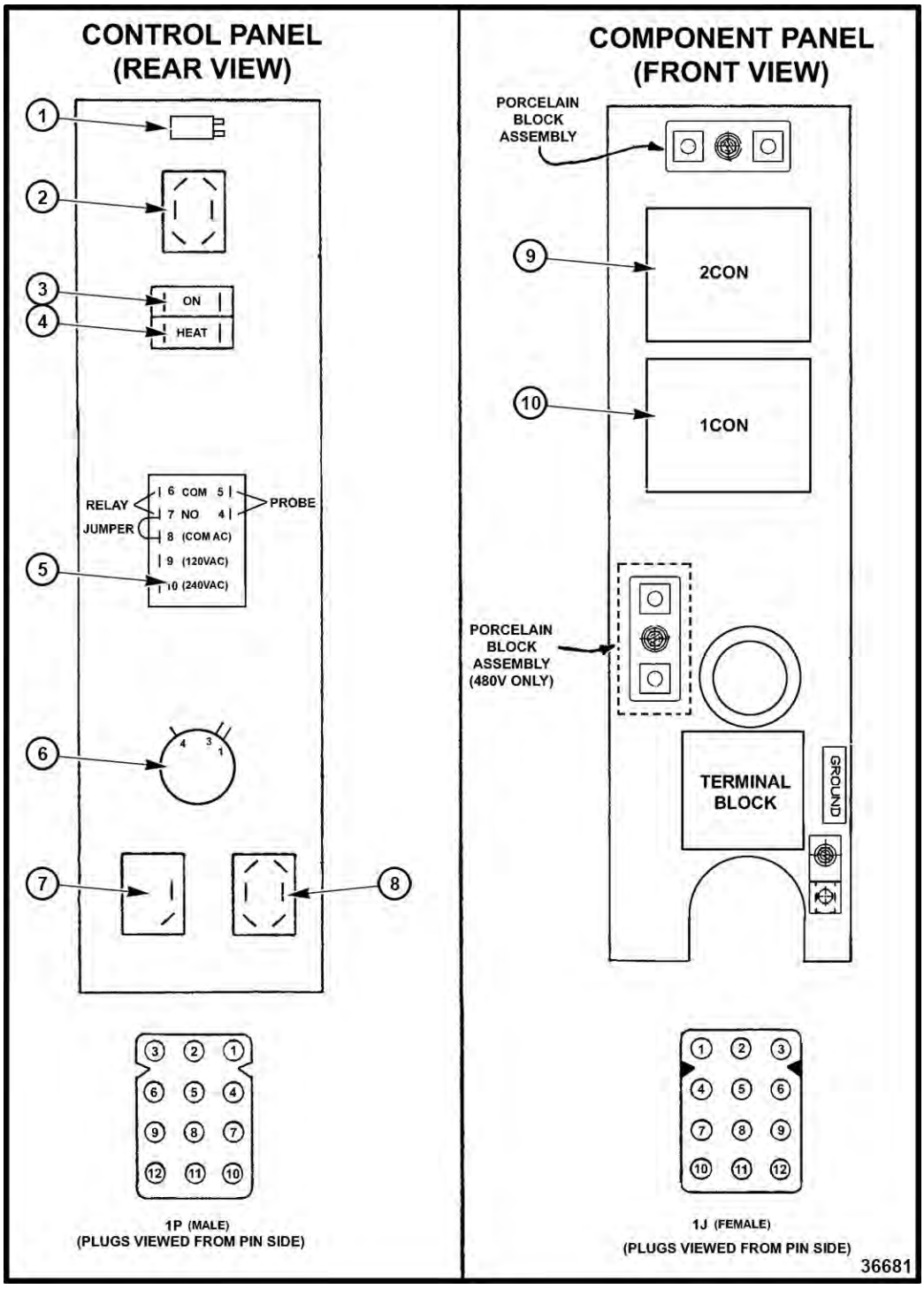

Fig. 79

Item	Description	Function
1	Alarm/Buzzer	Signals the end of a "Cook" cycle when cooking time expires.
2	Power Switch (S1)	Determines the mode of operation; ON, OFF, or COOL DOWN.

Item	Description	Function
3	Power ON Light	Lit whenever the power switch (S1) is turned to ON or Cool Down mode.
4	Heat ON Light	Lit whenever temperature control is calling for heat.
5	Solid State temperature Control	Monitors temperature sensor and regulates the oven cavity temperature by controlling 2CON to energize the heating elements when the control calls for heat.
6	Cook Timer	Counts the "Cook" time of the product and signals the buzzer at the end of the cycle.
7	Oven Light Switch (S2)	Controls the oven cavity lights.
8	Fan Speed Switch (S3)	Controls blower motor speed between High and Low settings.
9	2CON	Provides power to heating elements when both are energized. 2CON is energized by the temperature control when a call for heat is made.
10	1CON	Provides power to heating elements when both are energized. 1CON is energized when power switch is turned ON.

TIMER COMPONENT LAYOUT AND FUNCTION (STARTING SN 482075494)

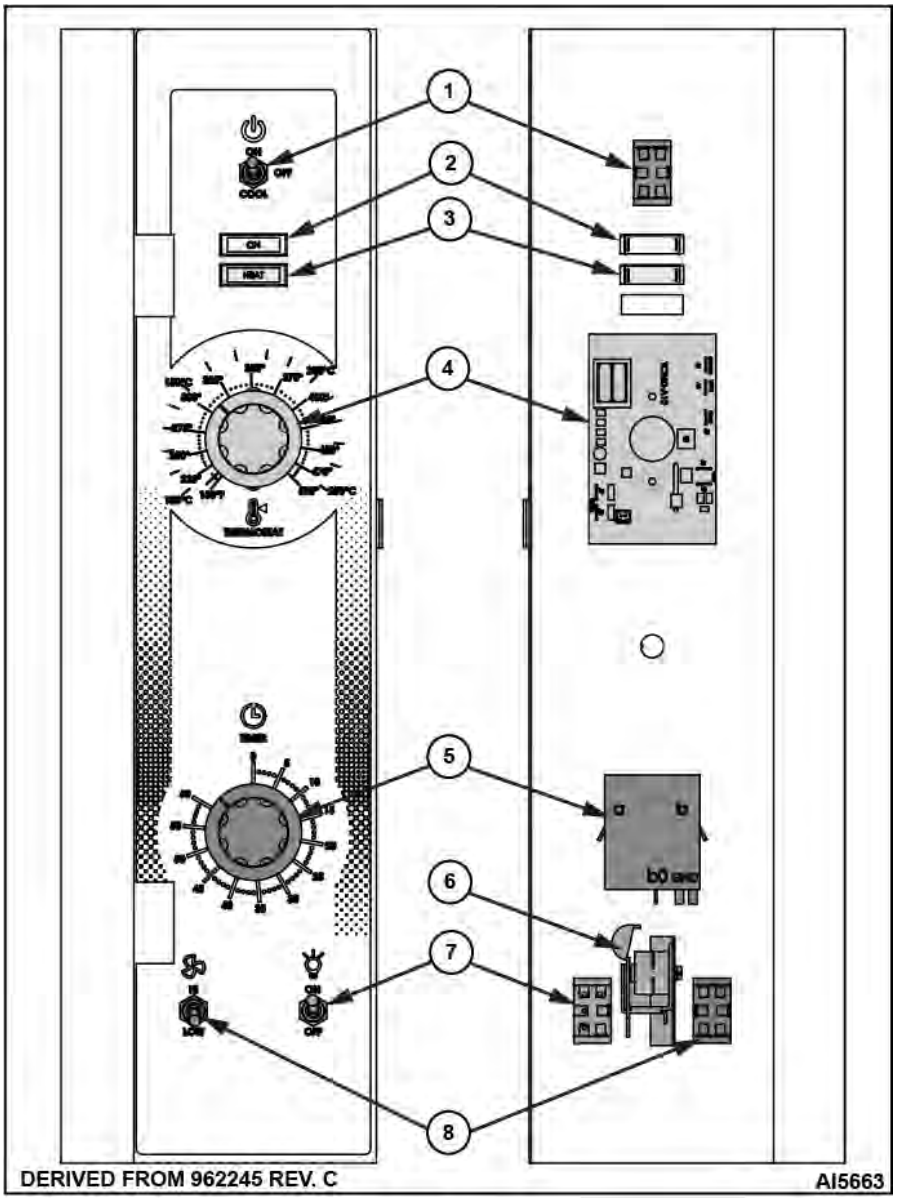

Fig. 80

Item	Name / Electrical Callout	Function
1	Power Toggle Switch (S1)	Determines the mode of operation; ON, OFF, or COOL DOWN.
2	Indicator "ON" Light (C)	Indicates when oven is powered on.
3	Indicator "HEAT" Light (C1)	Indicates when oven is heating.
4	Temperature Control (Y)	Analog temperature controler.
5	Timer (F)	Allows user to set cooking timer.
6	Alarm / Buzzer (G)	Signals the end of a "Cook" cycle when cooking time expires.
7	Oven Light Switch (S2)	Controls the oven cavity lights.
8	Fan Speed Switch (S3)	Controls blower motor speed between High and Low settings.

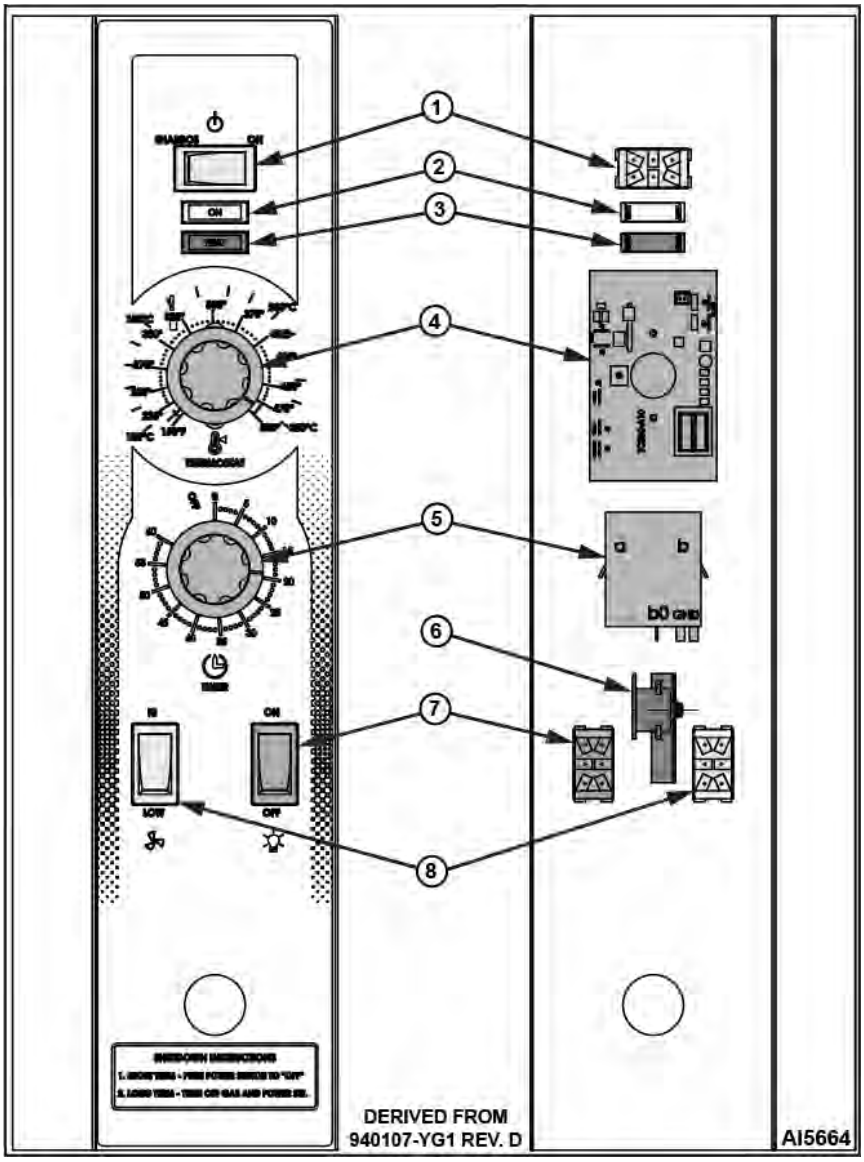

Fig. 81

Item	Name / Electrical Callout	Function
1	Power Toggle Switch (S1)	Determines the mode of operation; ON, OFF, or COOL DOWN.
2	Indicator "ON" Light (C)	Indicates when oven is powered on.
3	Indicator "HEAT" Light (C1)	Indicates when oven is heating.
4	Temperature Control (Y)	Analog temperature controler.
5	Timer (F)	Allows user to set cooking timer.
6	Alarm / Buzzer (G)	Signals the end of a "Cook" cycle when cooking time expires.
7	Oven Light Switch (S2)	Controls the oven cavity lights.
8	Fan Speed Switch (S3)	Controls blower motor speed between High and Low settings.

SEQUENCE OF OPERATIONS

SEQUENCE OF OPERATION - VC4ES, VC6ES with Mechanical KX Thermostat

Refer to diagram Fig. 82 for electrical sequence of operation.

Cook Cycle

1. Conditions.
   - A. Oven connected to correct voltage and is properly grounded.
   - B. Power switch (S1) OFF.
   - C. Temperature dial set to lowest temperature (fully CCW).
   - D. High limit thermostat CLOSED.
   - E. Oven doors closed (door switch contacts CLOSED).
   - F. Oven cavity temperature below 140°F.
2. Power switch (S1) turned ON.
   - A. Power ON light (Amber) comes ON.
   - B. 1CON coil energized.
   - C. Blower motor energized. NOTE: Motor speed (Hi/Low) depends on position of fan speed switch (S3).
   - D. Component cooling fan energized.
   - E. Power to oven cavity light switch (S3) wire #1. Turns cavity lights ON/OFF and does not affect "Cook" cycle.
3. Set thermostat to desired "Cook" temperature and thermostat CLOSES.
   - A. Heating light (Clear) comes ON.
   - B. 2CON coil energized.
     1) Heating elements powered and heating starts.
4. Oven reaches set temperature and thermostat OPENS.
   - A. Heat light goes out.
   - B. 2CON coil de-energized.
     1) Power removed from heating elements and heating stops.
5. The oven will continue to cycle on the thermostat until the doors are opened or the power switch (S1) is turned to the OFF or COOL DOWN position.

SEQUENCE OF OPERATION - with Solid State Temperature Control

Cook Cycle

1. Conditions.
   - A. Oven connected to correct voltage and is properly grounded.
   - B. Power switch (S1) OFF.
   - C. Temperature dial set to lowest temperature (fully CCW).
   - D. High limit thermostat CLOSED.
   - E. Oven doors closed (door switch contacts CLOSED).
   - F. Oven cavity temperature below 140°F.
2. Power switch (S1) turned ON.
   - A. Power ON light (Amber) comes ON.
   - B. 1CON coil energized.
   - C. Solid state temperature control energized.
     1) Heating light (Clear) comes ON.
     2) 2CON coil energized.
        a. Heating elements powered and heating starts.
   - D. Blower motor energized.

NOTE: Motor speed (Hi/Low) depends on position of fan speed switch (S3).

   - E. Component cooling fan energized.
   - F. Power to oven cavity light switch (S3) wire #1. Turns cavity lights ON/OFF; does not affect "Cook" cycle.
3. Set temperature dial to desired "Cook" temperature.
4. Oven reaches set temperature.
   - A. Temperature control de-energizes internal relay and the normally open (N.O.) contacts OPEN.
     1) Heat light goes out.

2) 2CON coil de-energized.

a. Power removed from heating elements and heating stops.

5. The oven will continue to cycle on the temperature control until the doors are opened or power switch (S1) is turned to the OFF or COOL DOWN position.

SEQUENCE OF OPERATION - VC4EC, VC6EC (Computer Control)

Refer to diagram Fig. 98for electrical sequence of operation.

Cook Cycle

1. Conditions.
   A. Oven connected to correct voltage and is properly grounded.
   B. Power switch (S1) OFF.
   C. Computer control is setup properly and ready to use. NOTE: The set point temperature of the computer control will be the last temperature that was set.
   D. High limit thermostat CLOSED.
   E. Oven doors closed (door switch contacts CLOSED).
   F. Oven cavity temperature below 140°F.
2. Power switch (S1) turned ON.
   A. 1CON coil energized.
   B. 24VAC transformer (T1) is energized.
      1) Computer control is energized and performs a power ON self test before energizing outputs. If the control passes self test, then the outputs are energized and operation sequence continues. If control does not pass self test then the corresponding error code is displayed.
   C. Component cooling fan energized.
   D. Power is connected to:
      1) Terminal 1 on solid state relay 1 (SSR1 - load side) and solid state relay 2 (SSR2 - load side).
      2) Pin 3 (C3-3) on computer control (input "IN-2").
      3) Oven cavity light switch (S2). Turns cavity lights ON/OFF; does not affect "Cook" cycle.
3. Computer control senses oven cavity temperature through probe input. With the oven cavity temperature below set point, the output from pin C3-2 is activated.
   A. Oven "Heat Light" on the control comes ON.
   B. 2CON coil energized.
      1) Heating elements powered and heating starts.
   C. The controls 5VDC output from pins C2-2 (-) and C2-8 (+) is activated and SSR1 relay is energized.
      1) Convection fan motor is energized (High speed).
4. Oven reaches set point temperature.
   A. Computer control de-activates the output from pin C3-2.
      1) 2CON coil de-energized.
         a. Power removed from heating elements and heating stops.
   B. Oven "Heat Light" on the control goes out.
   C. Oven "Ready Light" on the control comes ON.
   D. Electronic beeper sounds momentarily.
5. The oven will continue to cycle on the computer control until the doors are opened or power switch (S1) is turned to the OFF or COOL DOWN position.

Temperature and Time Cycle (Cooking)

NOTE: The computers internal "Cook" timer operates independently of the heating cycle. Additional time can be set or the timer can be stopped and re-started throughout the cooking cycle. Refer to the Instructions Manual for specific operating instructions of the oven Computer Control.

Roast and Hold Cycle

NOTE: For a detailed explanation of the "Roast & Hold" mode, refer to the Instructions Manual F31159 as outlined under SETTING THE OVEN FOR ROAST & HOLD and ROAST & HOLD OPERATION. In "Roast & Hold" mode, the operation of the computer control is identical to the normal Cook Cycle with these exceptions:

1. Oven "Roast & Hold" light on the control comes ON.

2. Convection fan will operate at Low speed, throughout the "Roast & Hold" cycle.
    A. The computer control 5VDC output from pins C2-2 (-) and C2-8 (+) is de-activated and SSR1 relay is de-energized.
        1) Power is removed from convection fan motor high speed terminal.
    B. The computer control 5VDC output from pins C2-1 (-) and C2-8 (+) is activated and SSR2 relay is energized.
        1) Power is applied to the convection fan motor low speed terminal.
3. Beeper sounds momentarily to indicate the end of first stage cooking (oven operates normally at the temperature and time selected until time expires).
4. The display flashes HOLD as the oven enters HOLD mode. This is also considered second stage cooking (oven heating stops but product continues to cook on residual heat).
    A. Convection fan motor is de-energized.
5. After the oven temperature drops below 150°F, the heat comes back ON and cycles as needed, to maintain the "Hold" temperature of 150°F.
    A. Convection fan motor energized (Low speed).
6. The oven continues to cycle in this manner until one of the following occurs:
    A. The "Roast & Hold" mode is turned OFF.
    B. Power switch (S1) is turned to the OFF or COOL DOWN position.

Cool Down Cycle

1. Conditions.
    A. Oven is ON.
    B. Oven cavity temperature needs to be lowered.
    C. Doors are open (door switch contacts OPEN).
    D. Power switch (S1) set to either ON or OFF.
2. Power Switch (S1) turned to COOL DOWN.
    A. Power is connected through power switch (S1) to the convection fan motor high speed terminal.
        1) Convection fan motor energized (High speed).
3. The oven will continue to operate in COOL DOWN mode until the power switch (S1) is turned to the OFF or ON position.

DIAGRAMS

VC4ES & VC6ES WITH MECHANICAL (KX) CONTROLS SCHEMATICS AND WIRING DIAGRAMS

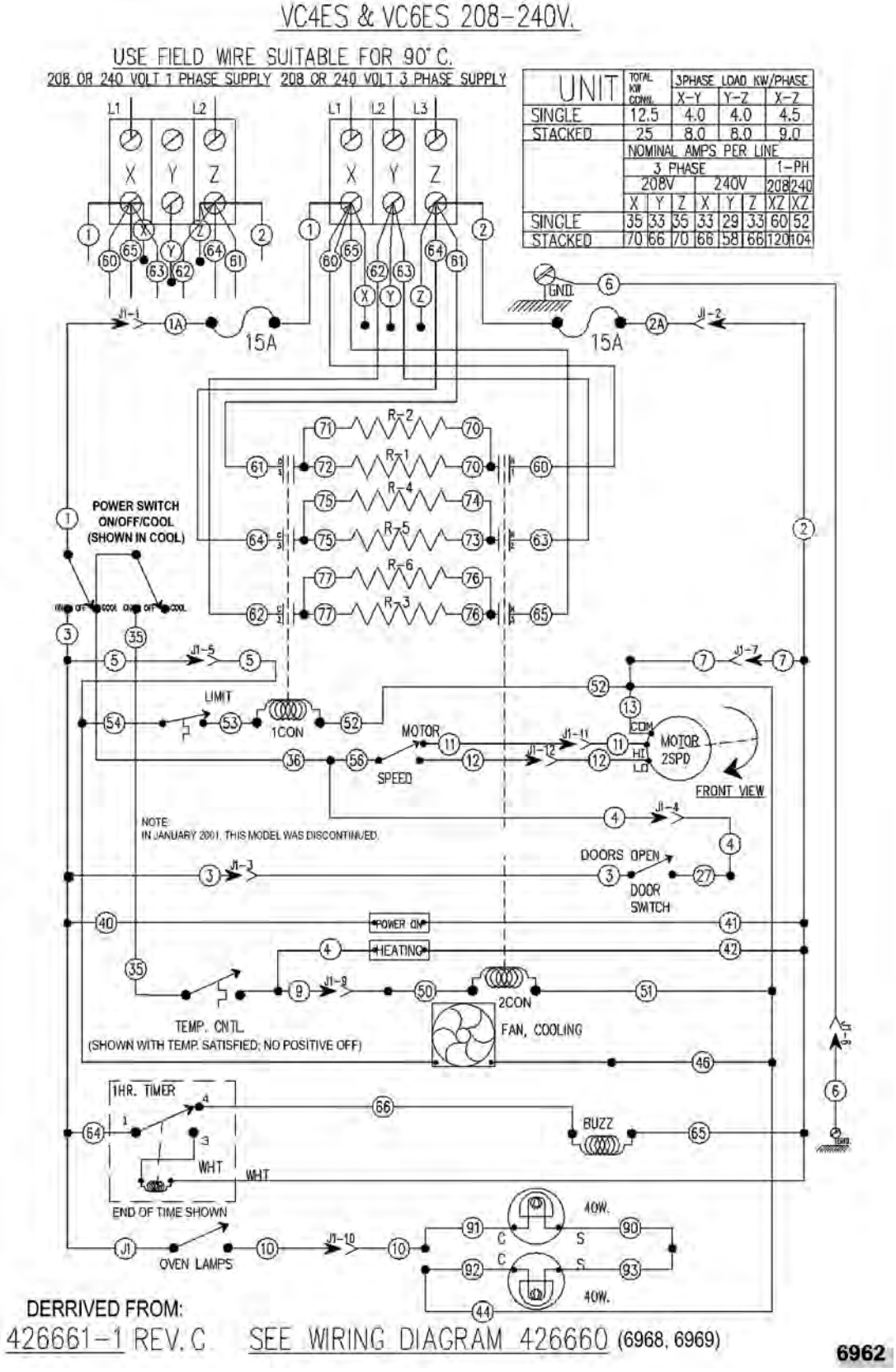

VC4ES, VC6ES with Mechanical (KX) Controls, 208-240V

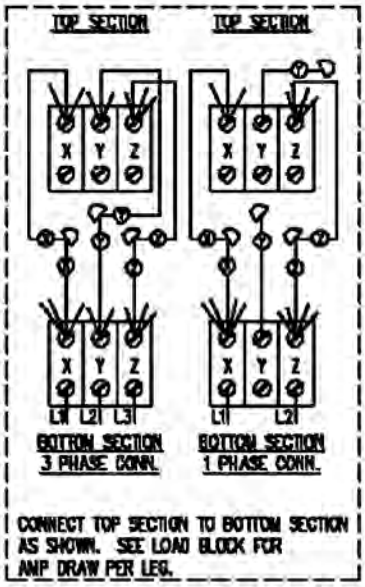

9	AB	WIRE NUT BLUE	-
2	Y	LAMP ASSEMBLY 120V. 40V.	-
1	X	SWITCH, TOGGLE D.P.D.T. (CO)	-
1	V	MOTOR 1/3 HP. 2 SPEED G.E.	-
2	T	CONTACTOR 40A 3 POLE	-
1	S	TERMINAL BLOCK 3 POLE	-
2	R	FUSE & HOLDER 15A	HOLDER FUSE
6	L	ELEMENT, 2.0 KW	208 VOLT 240 VOLT
1	K	LIMIT CONTROL 550F	-
1	J	BLOCK,PORCELIAN ASSEMBLY	-
1	H	SWITCH, LIMIT (DOOR)	-
1	G	BUZZER 230 VOLT	-
1	F	TIMER, 230 VOLT	1-HR, 60 HZ. 5-HR, 60 HZ.
1	E	TEMP. CONTROL "KX-112"	-
1	D	FAN, COOLING 230 V.	-
1	C	LIGHT, "POWER ON","HEATING" 250V.	-
1	B	SWITCH, TOGGLE D.P.D.T	-
1	A	SWITCH, TOGGLE S.P.S.T	-
REQ.	IT.	DESCRIPTION	FIN.

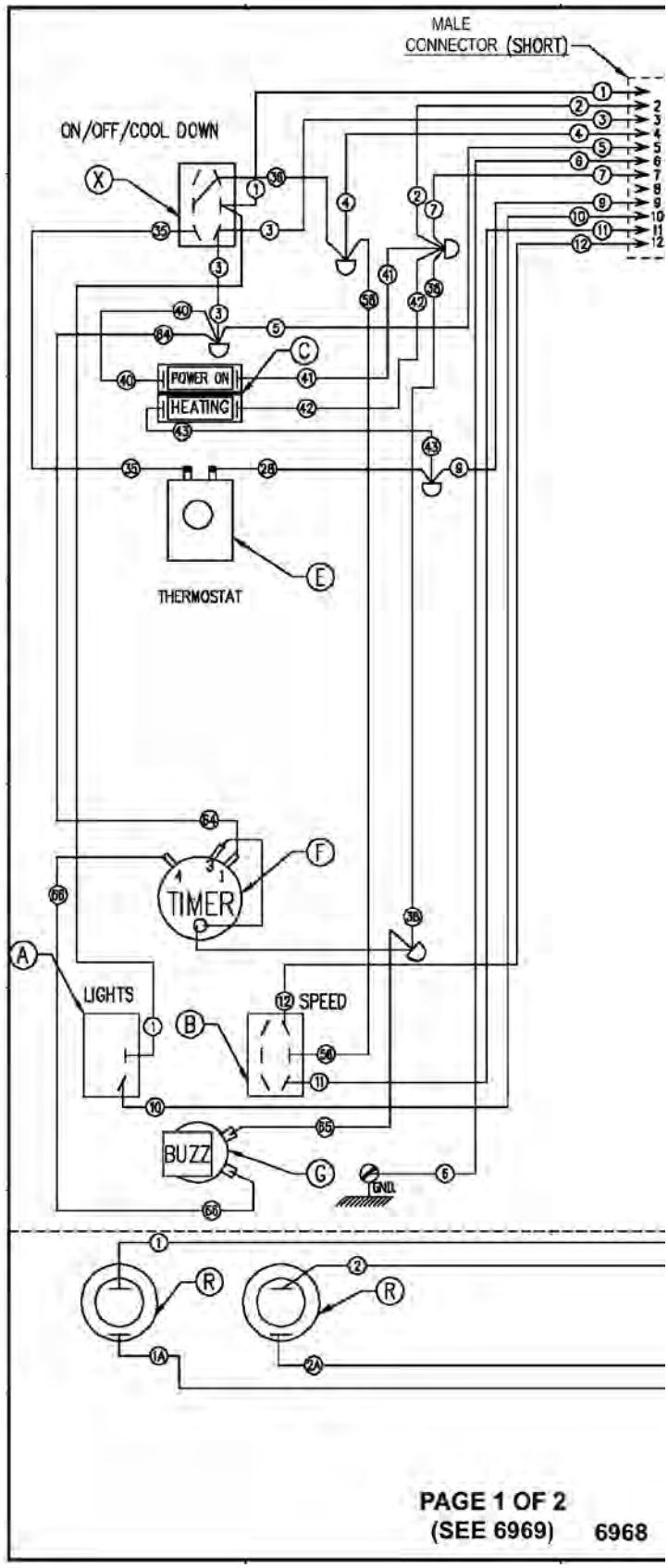

VC4ES, VC6ES with Mechanical (KX) Control, 208-240V

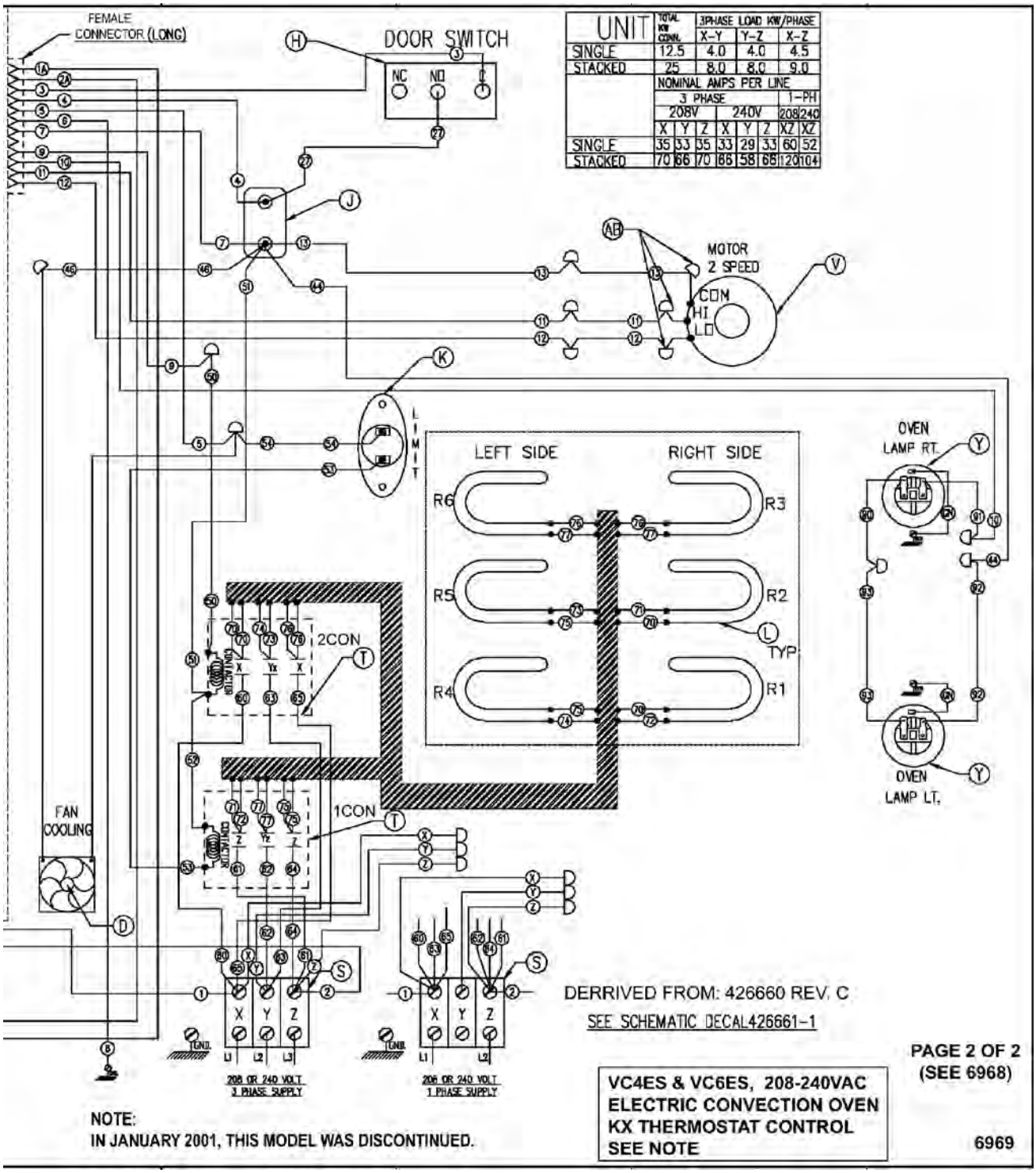

UNIT	TOTAL KW CONN.	3PHASE LOAD KW/PHASE		
		X-Y	Y-Z	X-Z
SINGLE	12.5	4.0	4.0	4.5
STACKED	25	8.0	8.0	9.0

	NOMINAL AMPS PER LINE							
	3 PHASE						1-PH	
	208V			240V			208	240
	X	Y	Z	X	Y	Z	XZ	XZ
SINGLE	35	33	35	33	29	33	60	52
STACKED	70	66	70	66	58	66	120	104

Fig. 84

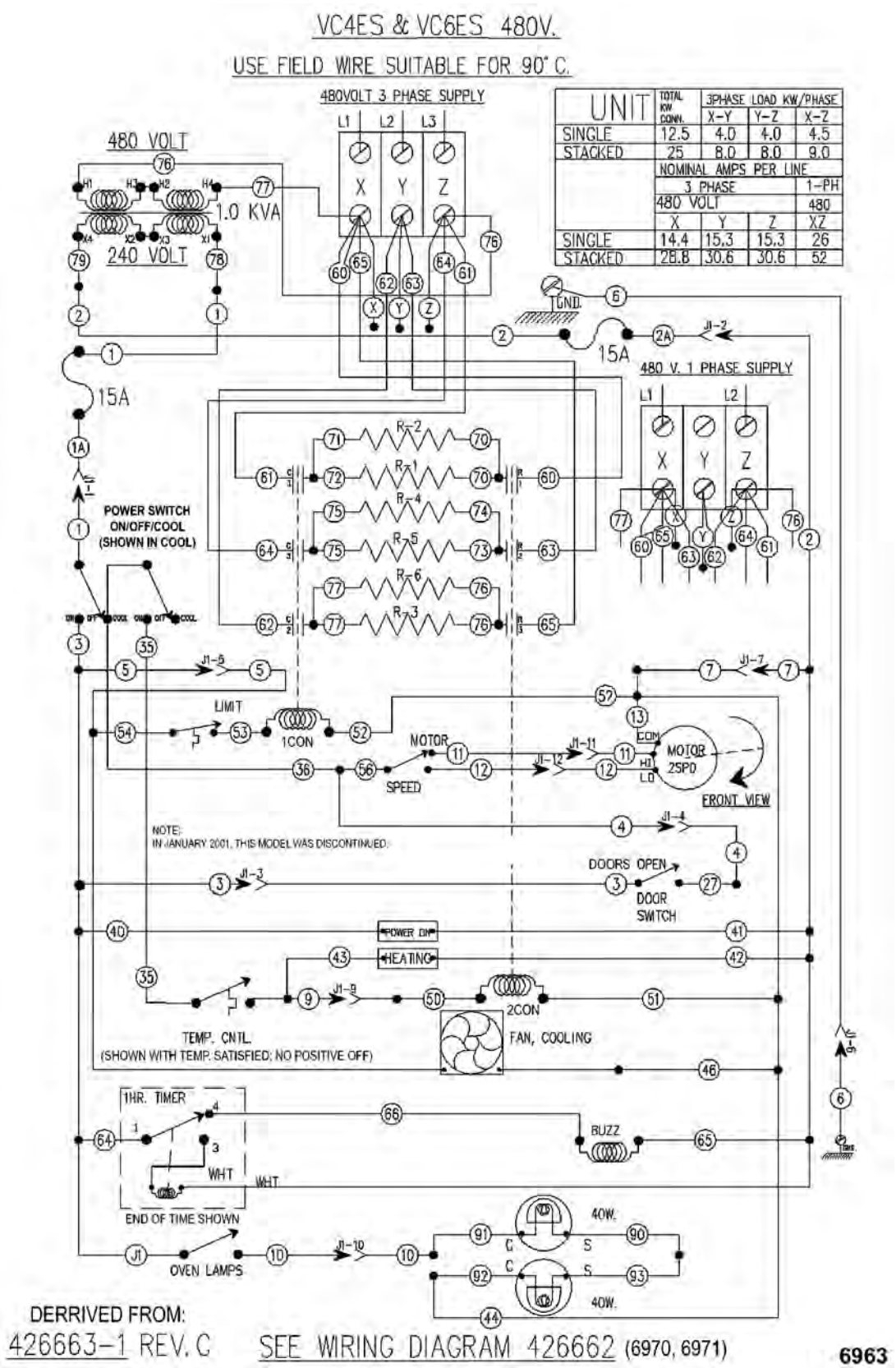

UNIT	TOTAL KW CONN.	3PHASE LOAD KW/PHASE X-Y	Y-Z	X-Z
SINGLE	12.5	4.0	4.0	4.5
STACKED	25	8.0	8.0	9.0
	NOMINAL AMPS PER LINE			
	3 PHASE 480 VOLT			1-PH 480
	X	Y	Z	XZ
SINGLE	14.4	15.3	15.3	26
STACKED	28.8	30.6	30.6	52

VC4ES, VC6ES with Mechanical (KX) Controls, 480V

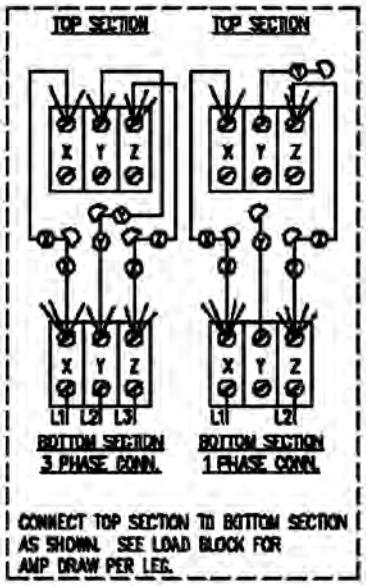

9	AB	WIRE NUT BLUE	-
1	Z	TRANSFORMER 1KVA 480-240 V.	-
2	Y	LAMP ASSEMBLY 120V. 40W.	-
1	X	SWITCH, TOGGLE D.P.D.T. (CO)	-
1	V	MOTOR 1/3 HP. 2 SPEED G.E.	-
2	T	CONTACTOR 40A 3 POLE	-
1	S	TERMINAL BLOCK 3 POLE	-
2	R	FUSE & HOLDER 15A — HOLDER / FUSE	
6	L	ELEMENT, 2.0 KW. 480V.	-
1	K	LIMIT CONTROL 550F	-
2	J	BLOCK,PORCELIAN ASSEMBLY	-
2	H	SWITCH, LIMIT (DOOR)	-
1	G	BUZZER 230 VOLT	-
1	F	TIMER, 230 VOLT — 1-HR, 60 HZ. / 5-HR, 60 HZ.	
1	E	TEMP. CONTROL "KX-112"	-
1	D	FAN, COOLING 230 V.	-
1	C	LIGHT, "POWER ON","HEATING" 250V.	-
1	B	SWITCH, TOGGLE D.P.D.T	-
1	A	SWITCH, TOGGLE S.P.S.T	-
REQ.	PT.	DESCRIPTION	MTR.

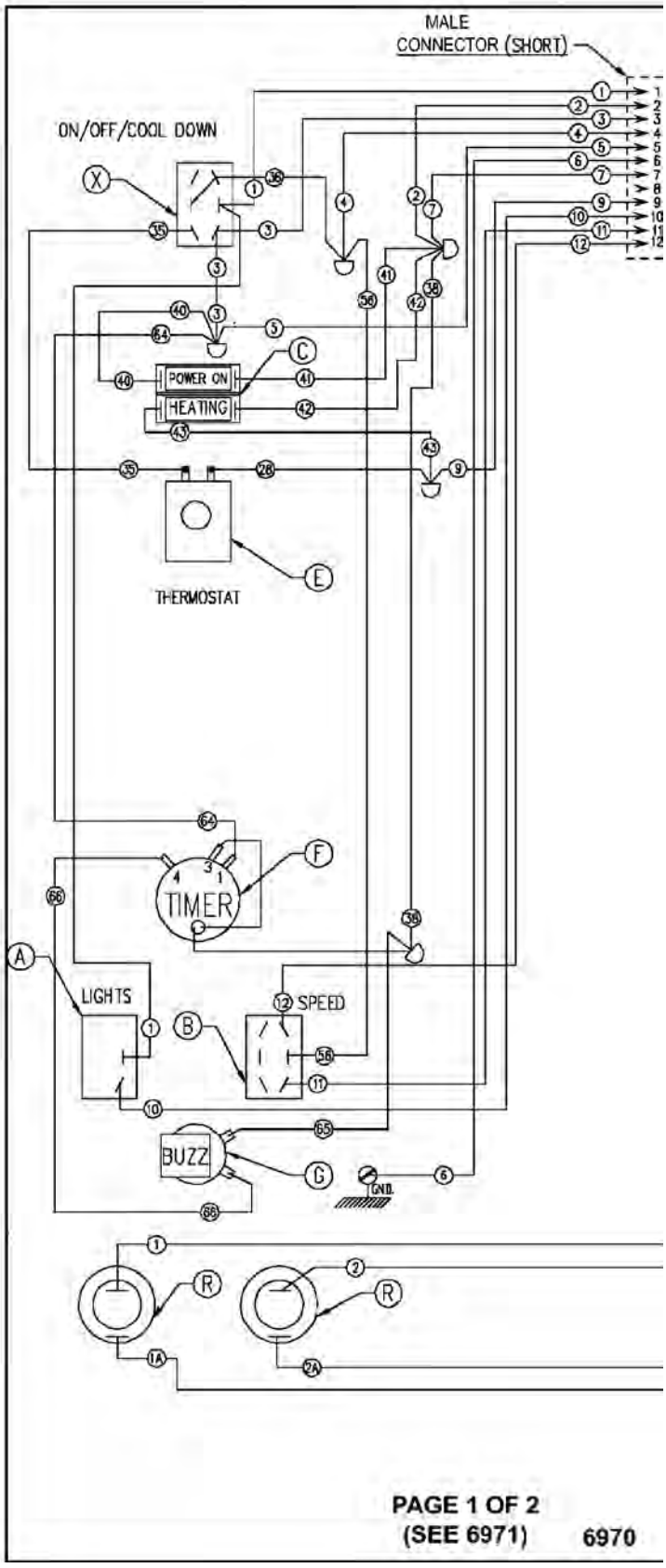

VC4ES, VC6ES with Mechanical (KX) Control, 480V

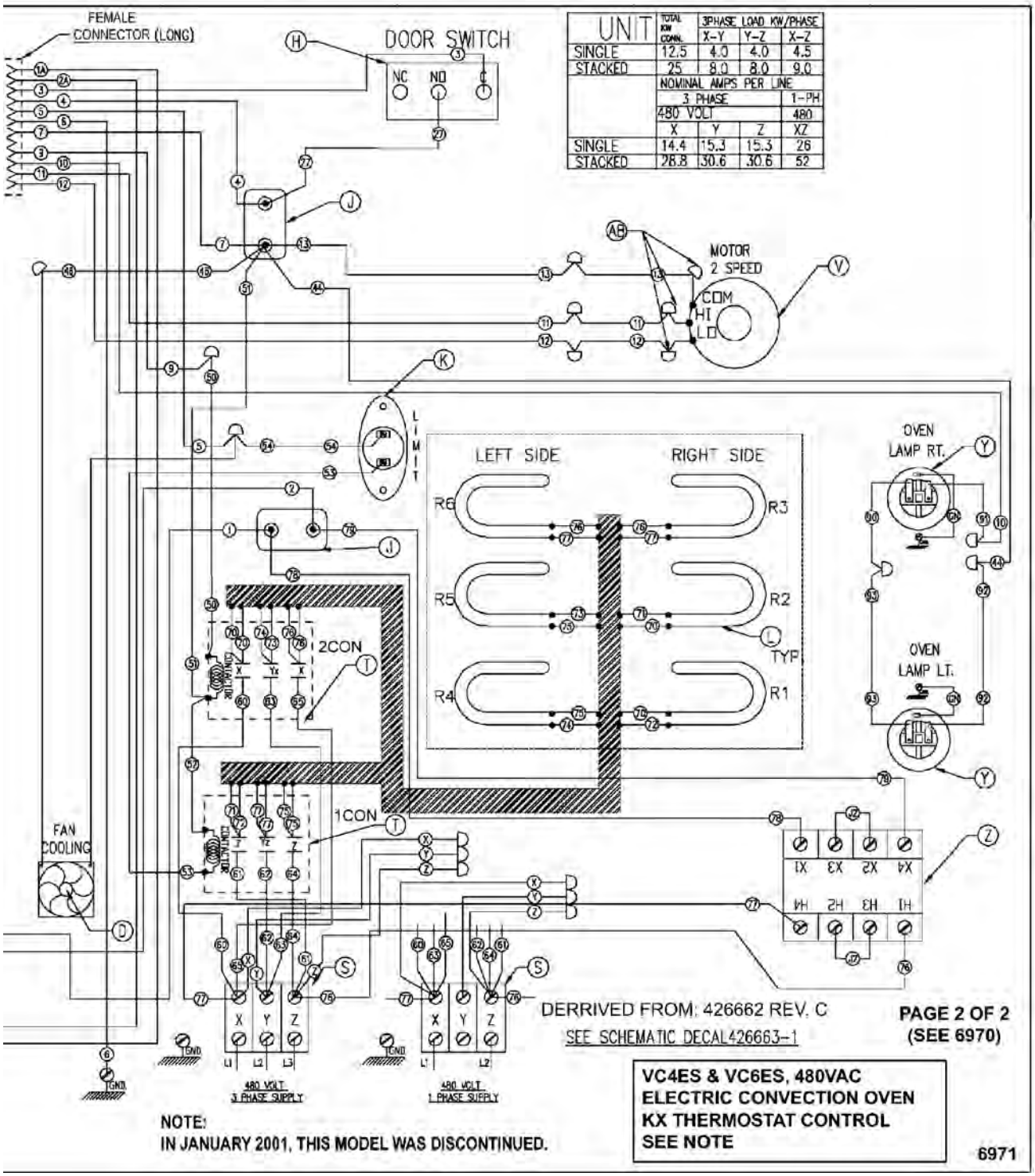

UNIT	TOTAL KW CONN.	3PHASE LOAD KW/PHASE		
		X-Y	Y-Z	X-Z
SINGLE	12.5	4.0	4.0	4.5
STACKED	25	8.0	8.0	9.0
	NOMINAL AMPS PER LINE			
	3 PHASE			1-PH
	480 VOLT			480
	X	Y	Z	XZ
SINGLE	14.4	15.3	15.3	26
STACKED	28.8	30.6	30.6	52

Fig. 87

VC4ED & VC6ED W / SOLID STATE TEMPERATURE CONTROL, SCHEMATICS AND WIRING DIAGRAMS

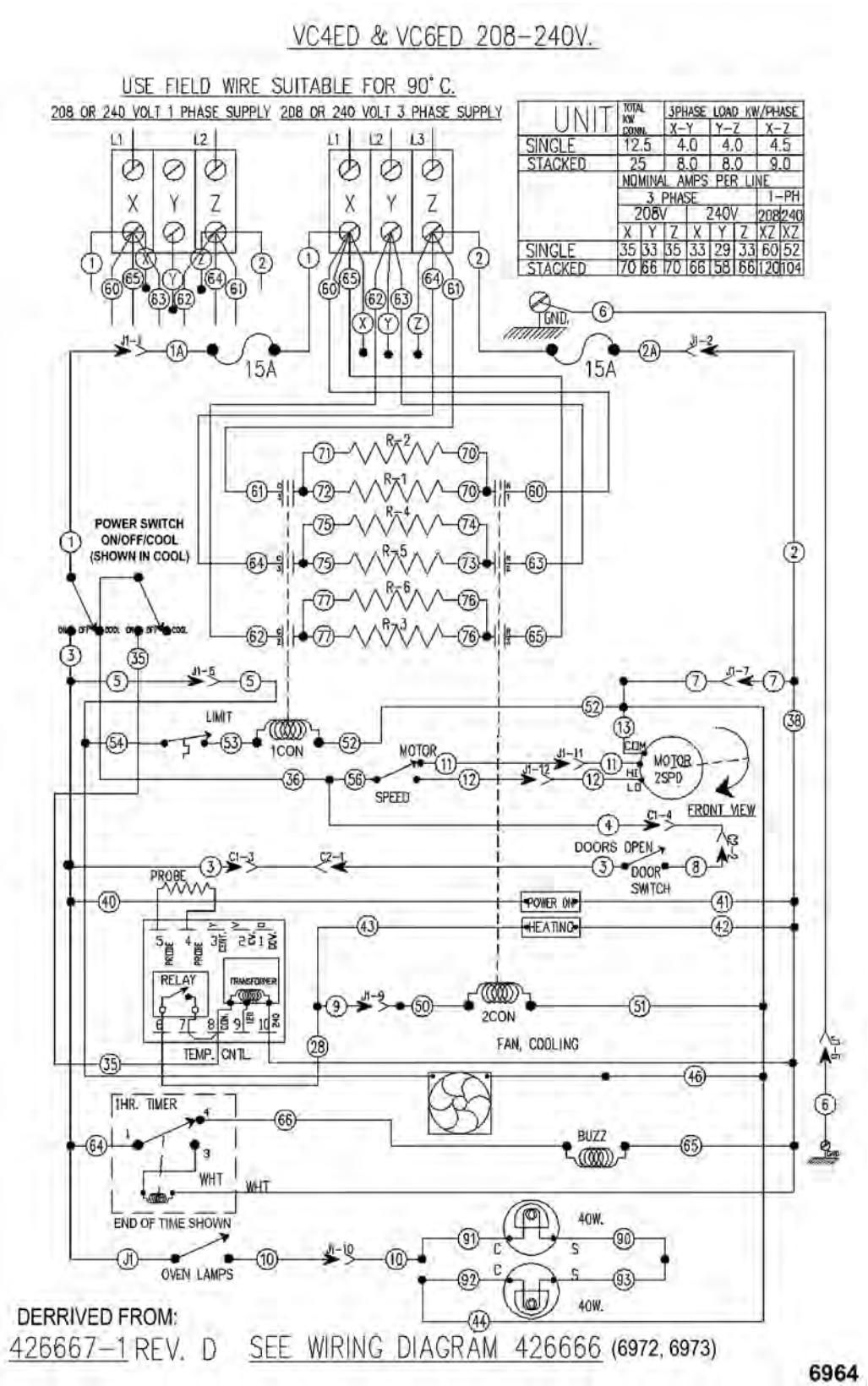

VC4ED, VC6ED with Solid State Temperature Control, 208-240V Schematic

HEC5 & X-VC4ED & 6-WKED & X - 208-240V - 00-426667J - AI5737 - Starting SN 482075494

- HEC5 & X-VC4ED & 6-WKED & X - 208-240V - 00-426667J - AI5737

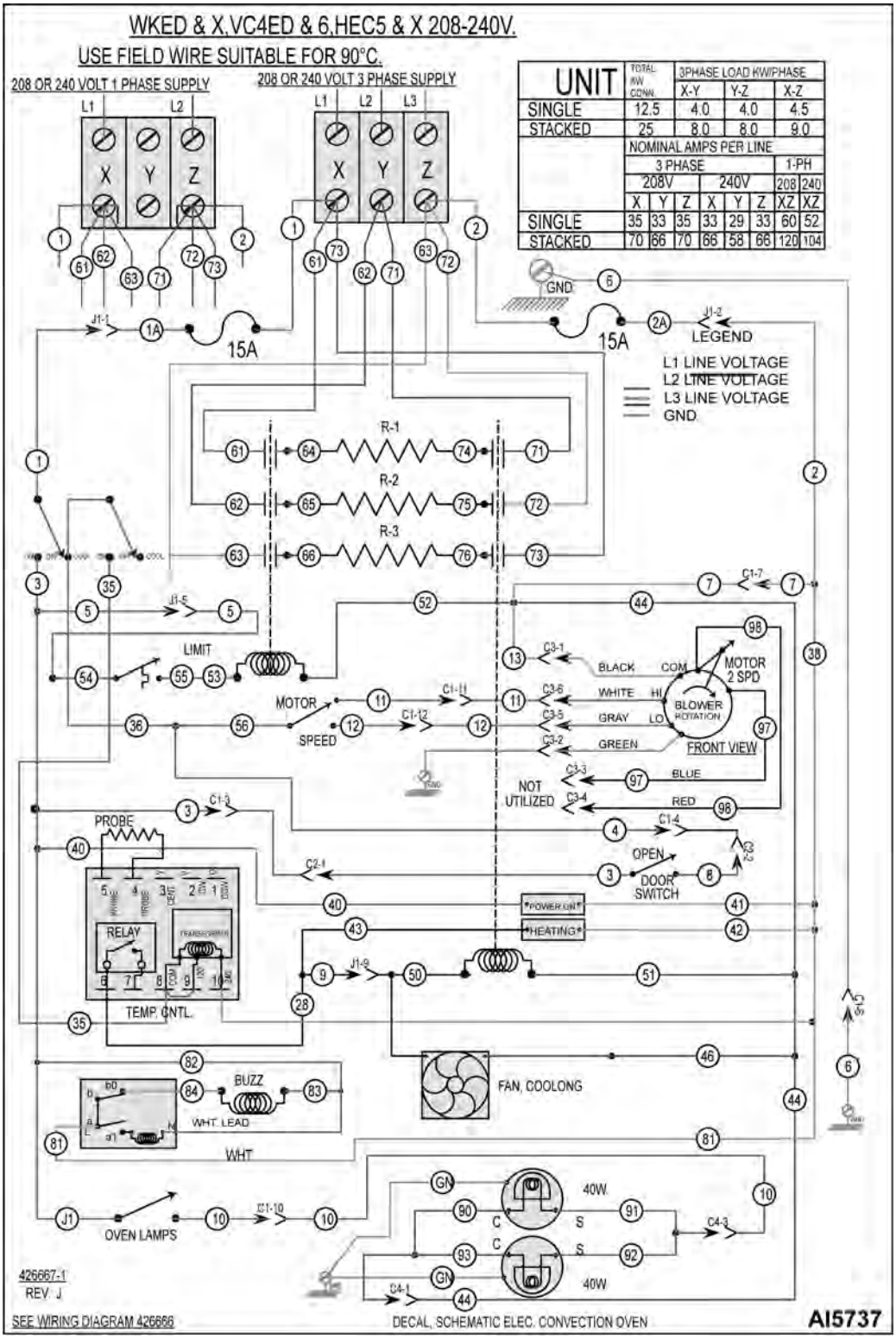

Fig. 89

HEC5 & X, VC4ED & 6, WKED & X - 208-240V - 1PH - 00-426666S - AI5736 - Starting 482075494

- HEC5 & x-VC4ED & 6- WKED & X - 208-240V - 1PH - 00-426666S - AI5736

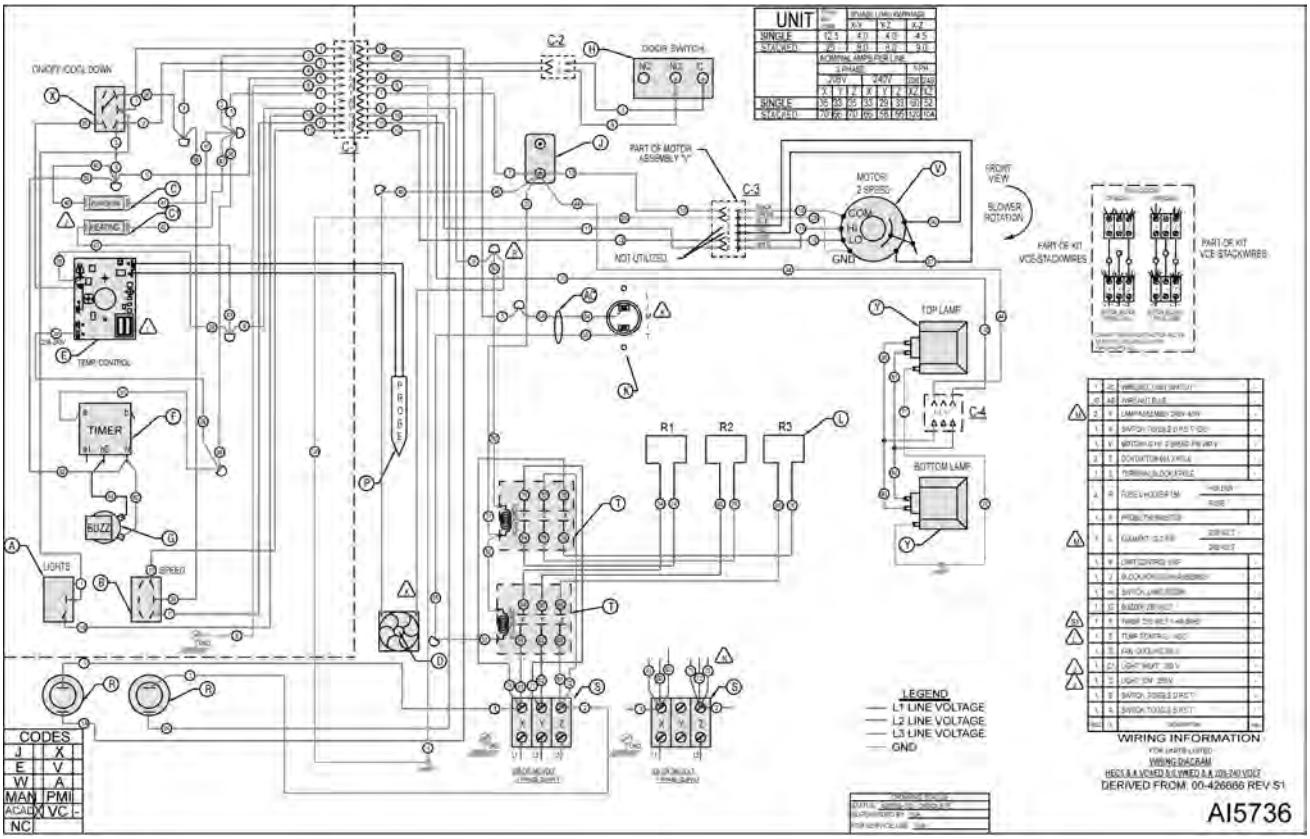

Fig. 90

VC4ED, VC6ED with Solid State Temperature Control, 208-240V - STARTING SERIAL NUMBER 481916864

- WKED & X, VC4ED & 6, HEC5 & X - 208-240V - 426667-1G - AI4899

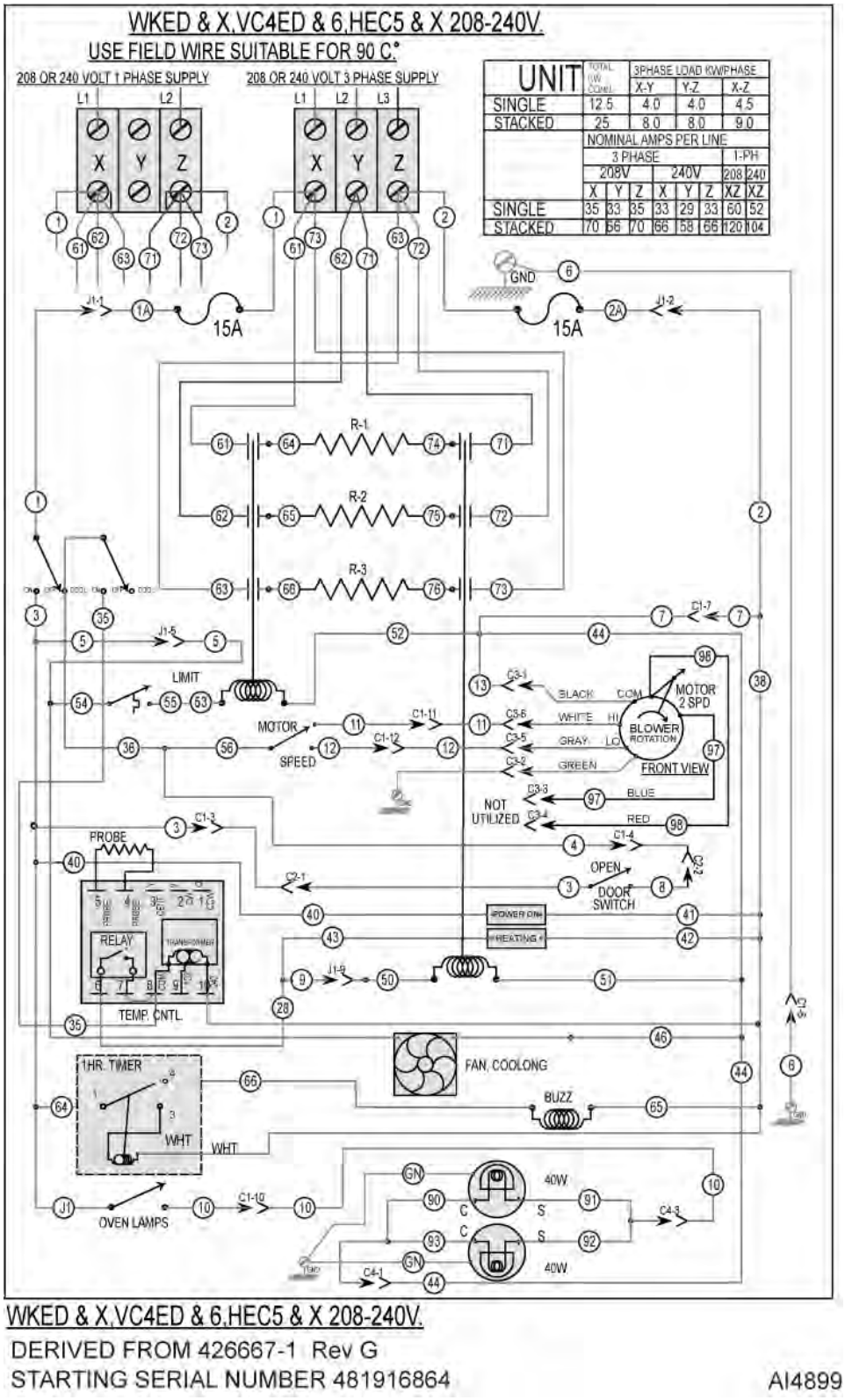

Fig. 91

HEC5 & X, VC4ED & 6, WKED & X with Solid State Temperature Control - 208-240V - 1PH - 00-426666 - AI4892 - STARTING AT SERIAL NUMBER 481916864

- HEC5 & X, VC4ED & 6, WKED & X - 208-240V - 426666 - AI4892

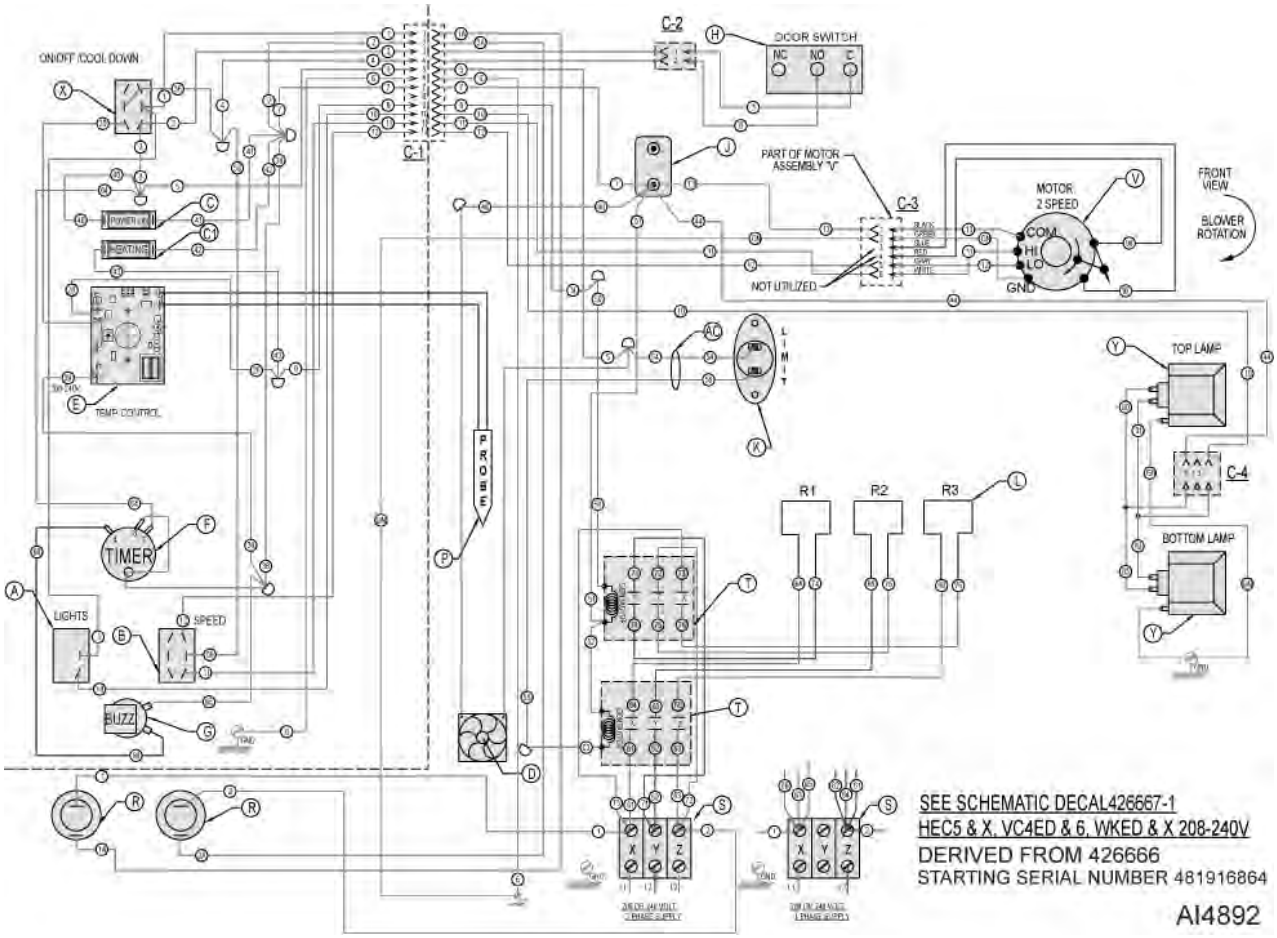
ON/OFF/COOL DOWN
C-2
DOOR SWITCH
NC NO C
C-1
PART OF MOTOR ASSEMBLY 'V'
C-3
MOTOR 2 SPEED
COM
HI
LO
GND
FRONT VIEW
BLOWER ROTATION
NOT UTILIZED
TOP LAMP
C-4
BOTTOM LAMP
LIMIT
PROBE
TIMER
LIGHTS
SPEED
BUZZ
R1
R2
R3
SEE SCHEMATIC DECAL426667-1
HEC5 & X, VC4ED & 6, WKED & X 208-240V
DERIVED FROM 426666
STARTING SERIAL NUMBER 481916864
AI4892

Fig. 92

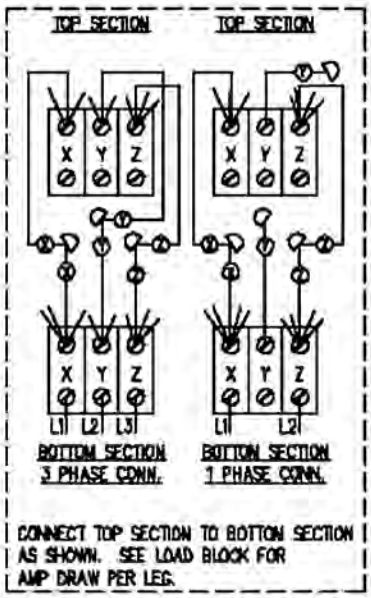

REQ.	IT.	DESCRIPTION		FOR
9	AB	WIRE NUT BLUE		-
2	Y	LAMP ASSEMBLY 120V. 40W.		-
1	X	SWITCH, TOGGLE D.P.D.T. (CO)		-
1	V	MOTOR 1/3 HP. 2 SPEED G.E.		-
2	T	CONTACTOR 40A 3 POLE		-
1	S	TERMINAL BLOCK 3 POLE		-
2	R	FUSE & HOLDER 15A	HOLDER	
			FUSE	
1	P	PROBE,THERMISTOR		-
6	L	ELEMENT, 2.0 KW	208 VOLT	
			240 VOLT	
1	K	LIMIT CONTROL 550F		-
1	J	BLOCK,PORCELIAN ASSEMBLY		-
1	H	SWITCH, LIMIT (DOOR)		-
1	G	BUZZER 230 VOLT		-
1	F	TIMER, 230 VOLT	1-HR, 60 HZ.	
			5-HR, 60 HZ.	
1	E	TEMP. CONTROL "G-5"		-
1	D	FAN, COOLING 230 V.		-
1	C	LIGHT, "POWER ON","HEATING" 250 V.		-
1	B	SWITCH, TOGGLE D.P.D.T		-
1	A	SWITCH, TOGGLE S.P.S.T		-

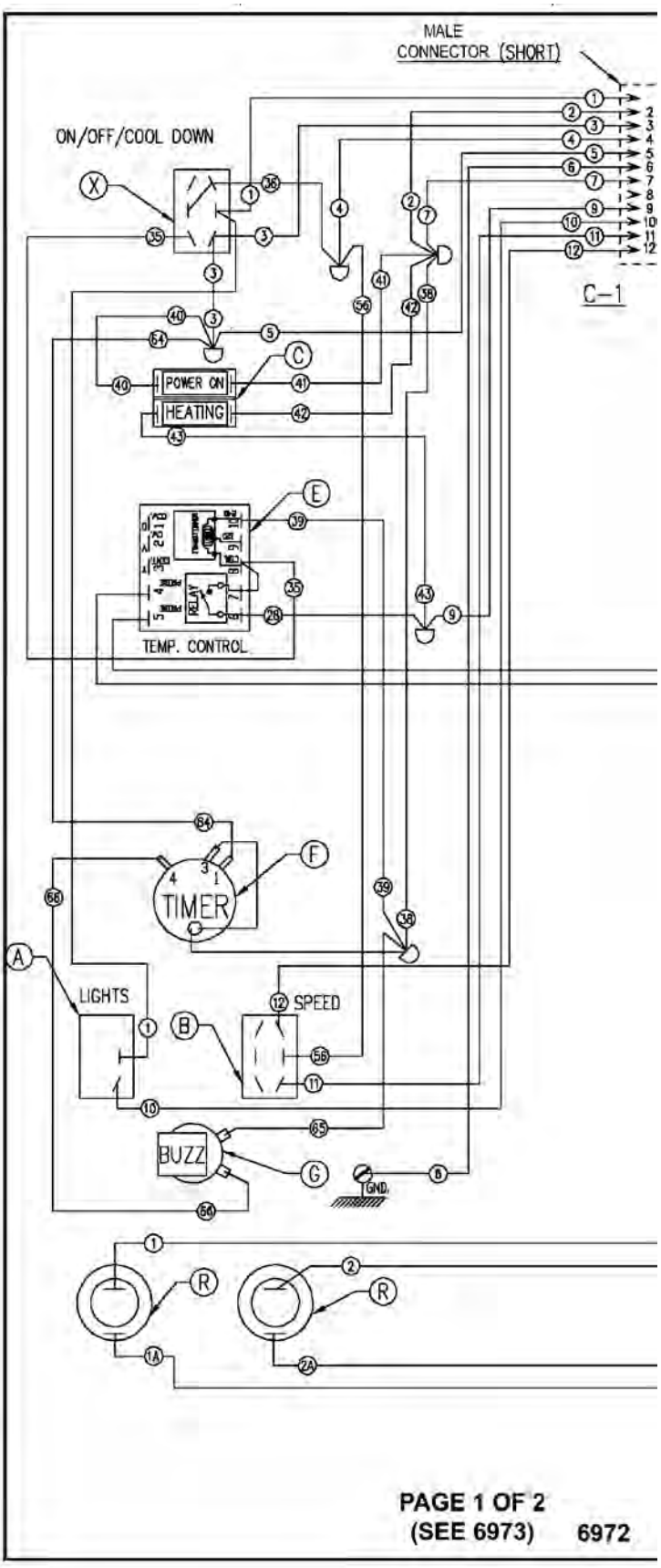

VC4ED, VC6ED with Solid State Temperature Control, 208-240V

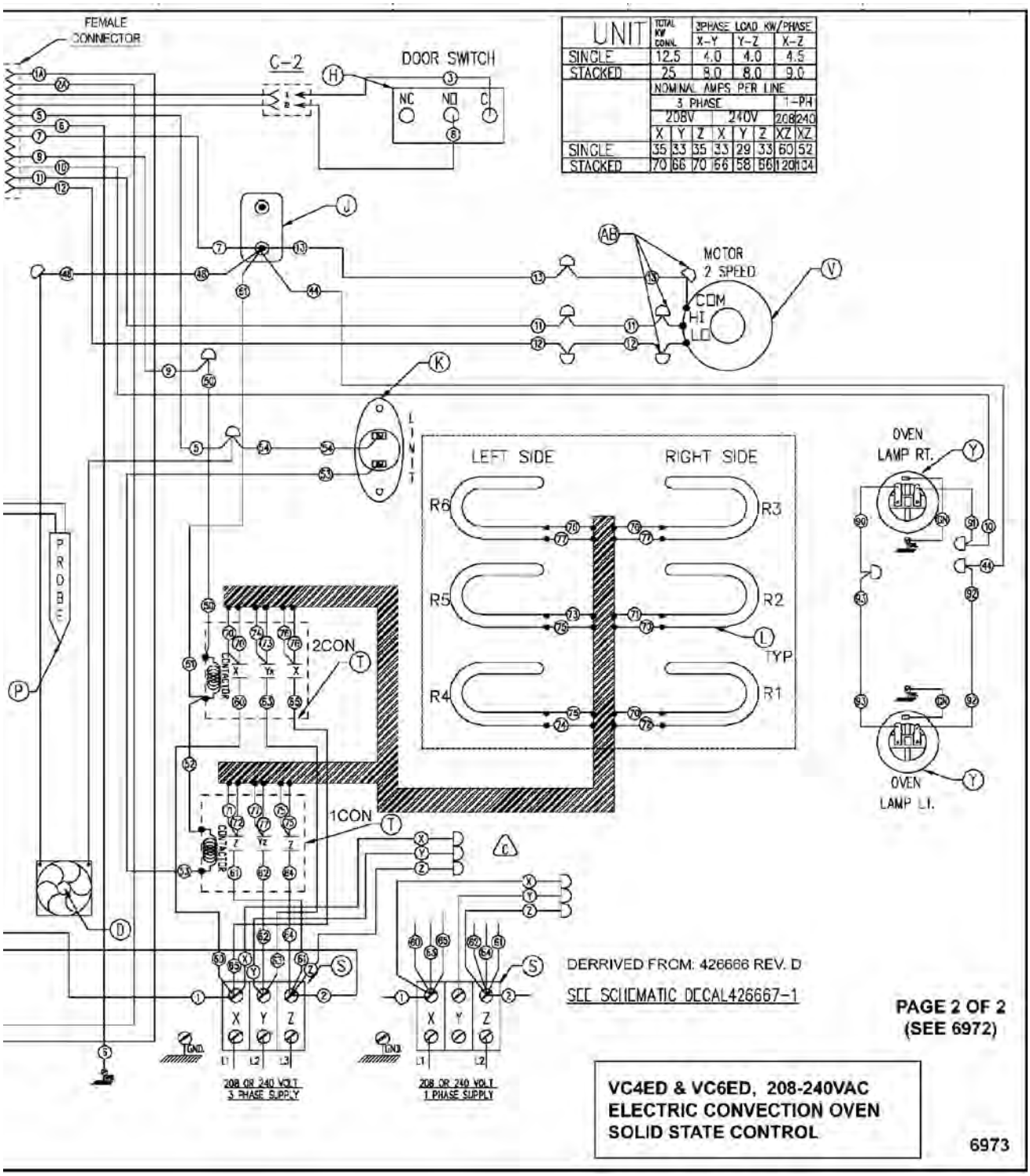

UNIT	TOTAL KW CONN.	3PHASE LOAD KW/PHASE		
		X-Y	Y-Z	X-Z
SINGLE	12.5	4.0	4.0	4.5
STACKED	25	8.0	8.0	9.0

	NOMINAL AMPS PER LINE							
	3 PHASE						1-PH	
	208V			240V			208	240
	X	Y	Z	X	Y	Z	XZ	XZ
SINGLE	35	33	35	33	29	33	60	52
STACKED	70	66	70	66	58	66	120	104

Fig. 94

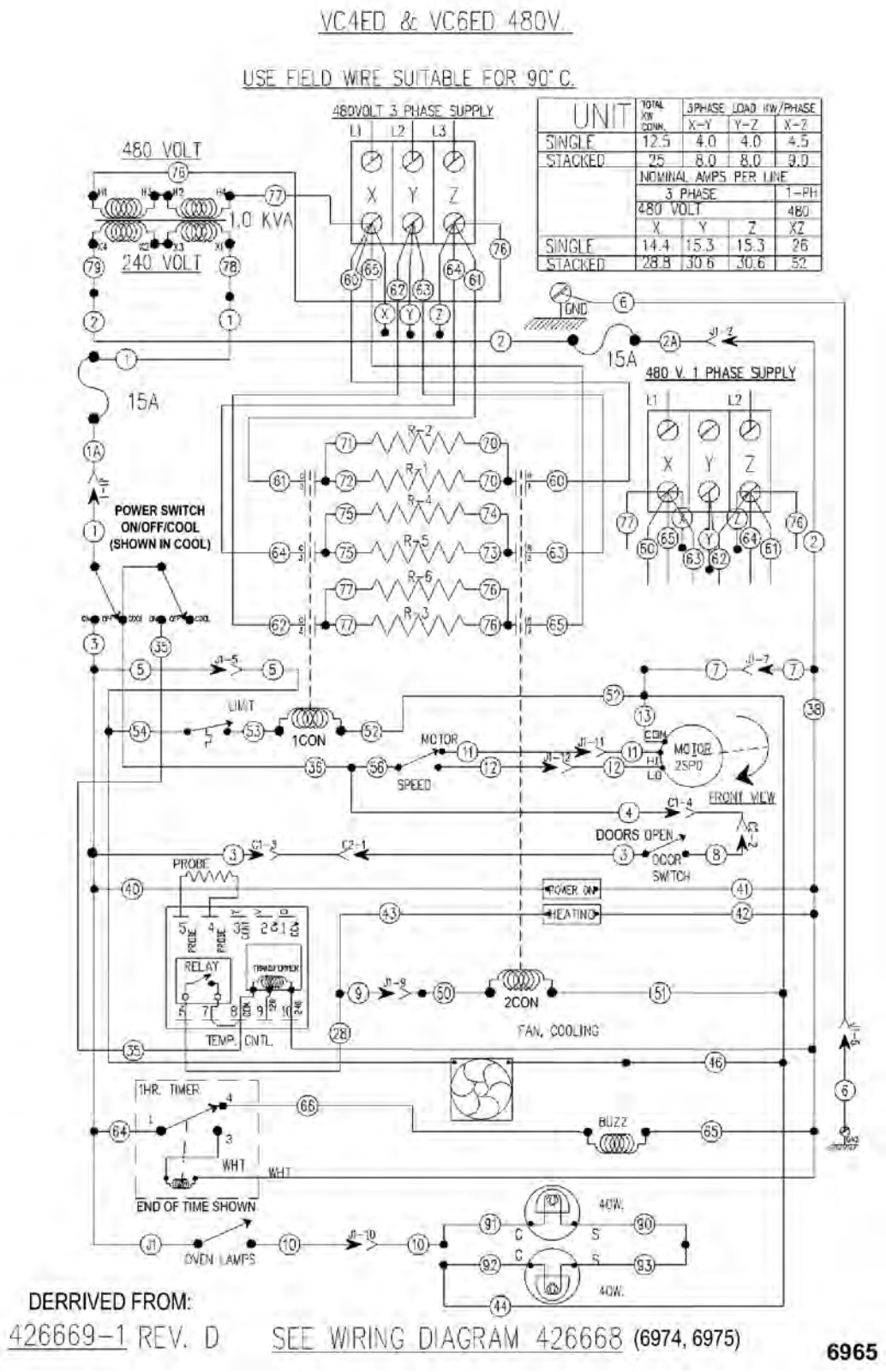

UNIT	TOTAL KW CONN.	3PHASE LOAD KW/PHASE		
		X-Y	Y-Z	X-Z
SINGLE	12.5	4.0	4.0	4.5
STACKED	25	8.0	8.0	9.0
	NOMINAL AMPS PER LINE			
	3 PHASE			1-PH
	480 VOLT			480
	X	Y	Z	XZ
SINGLE	14.4	15.3	15.3	26
STACKED	28.8	30.6	30.6	52

VC4ED, VC6ED with Solid State Temperature Control, 480V

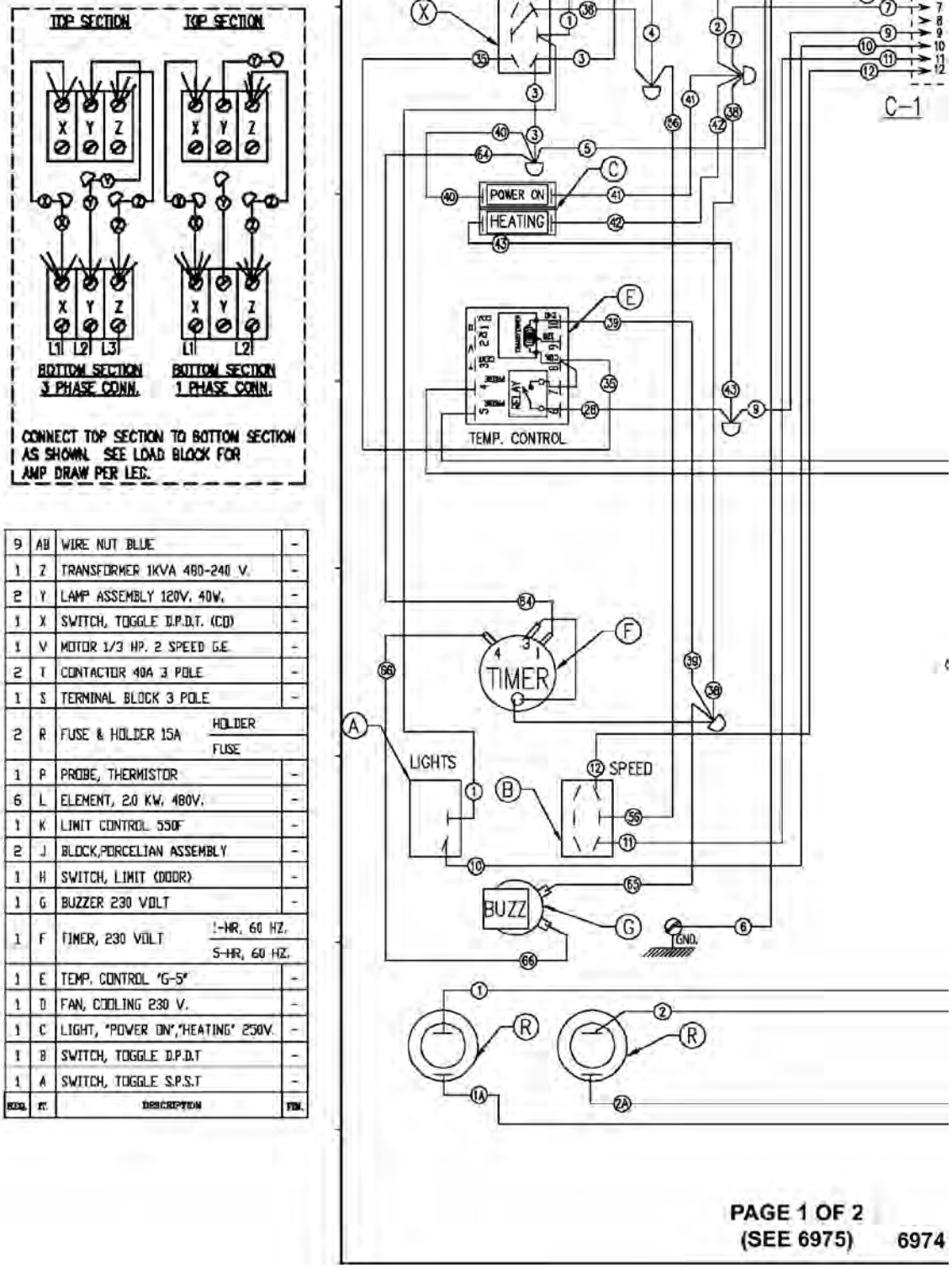

9	AB	WIRE NUT BLUE	-
1	Z	TRANSFORMER 1KVA 480-240 V.	-
2	Y	LAMP ASSEMBLY 120V. 40W.	-
1	X	SWITCH, TOGGLE D.P.D.T. (CO)	-
1	V	MOTOR 1/3 HP. 2 SPEED G.E.	-
2	T	CONTACTOR 40A 3 POLE	-
1	S	TERMINAL BLOCK 3 POLE	-
2	R	FUSE & HOLDER 15A	HOLDER / FUSE
1	P	PROBE, THERMISTOR	-
6	L	ELEMENT, 2.0 KW. 480V.	-
1	K	LIMIT CONTROL 550F	-
2	J	BLOCK,PORCELIAN ASSEMBLY	-
1	H	SWITCH, LIMIT (DOOR)	-
1	G	BUZZER 230 VOLT	-
1	F	TIMER, 230 VOLT	1-HR. 60 HZ. / 5-HR. 60 HZ.
1	E	TEMP. CONTROL "G-5"	-
1	D	FAN, COOLING 230 V.	-
1	C	LIGHT, "POWER ON","HEATING" 250V.	-
1	B	SWITCH, TOGGLE D.P.D.T	-
1	A	SWITCH, TOGGLE S.P.S.T	-
QTY.	ITT.	DESCRIPTION	ITEM.

VC4ED, VC6ED with Solid State Temperature Control, 480V

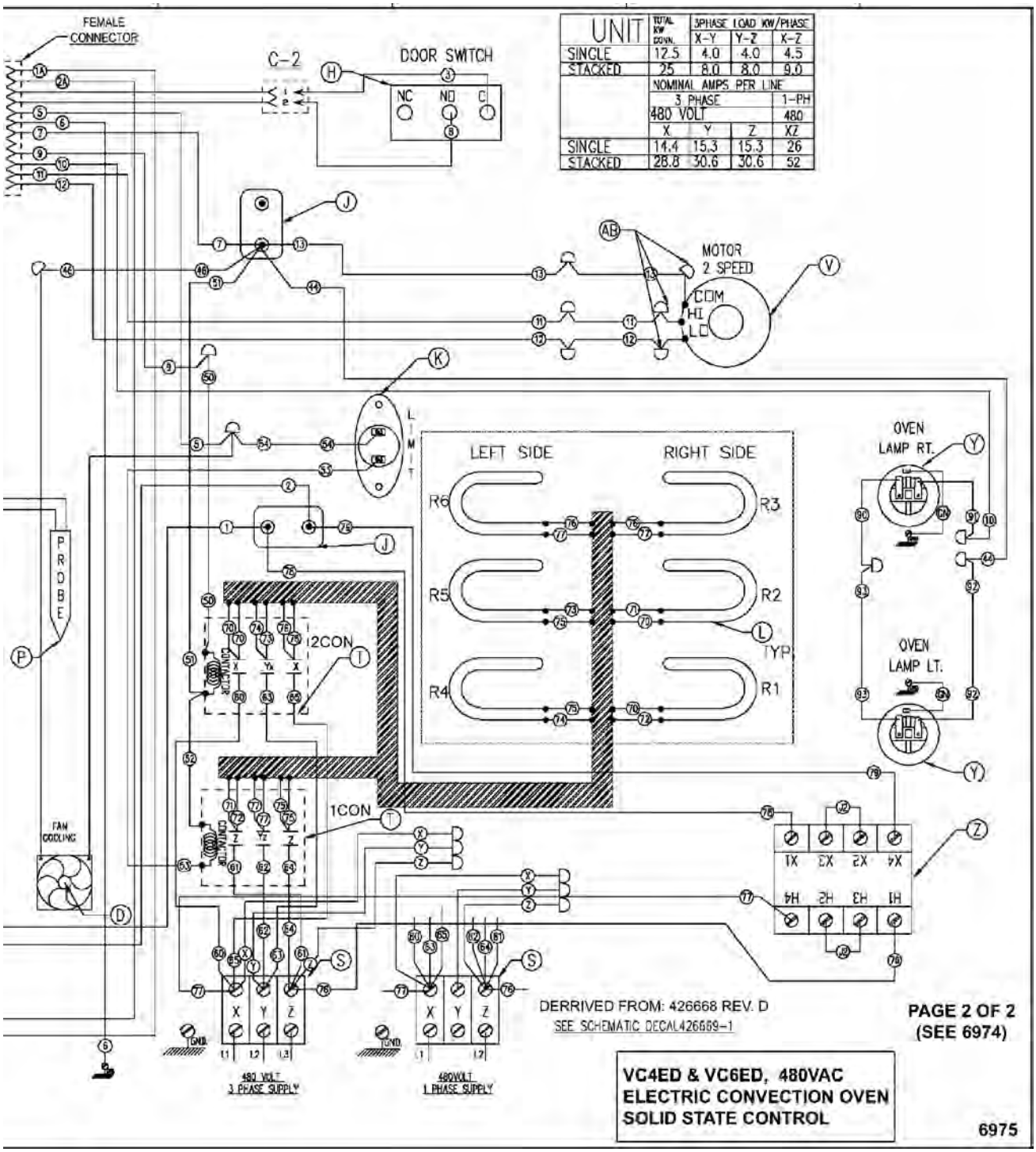

UNIT	TOTAL KW DOWN.	3PHASE LOAD KW/PHASE X-Y	Y-Z	X-Z
SINGLE	12.5	4.0	4.0	4.5
STACKED	25	8.0	8.0	9.0
	NOMINAL AMPS PER LINE			
	3 PHASE			1-PH
	480 VOLT			480
	X	Y	Z	XZ
SINGLE	14.4	15.3	15.3	26
STACKED	28.8	30.6	30.6	52

Fig. 97

VC4EC & VC6EC COMPUTER CONTROL SCHEMATICS AND WIRING DIAGRAMS

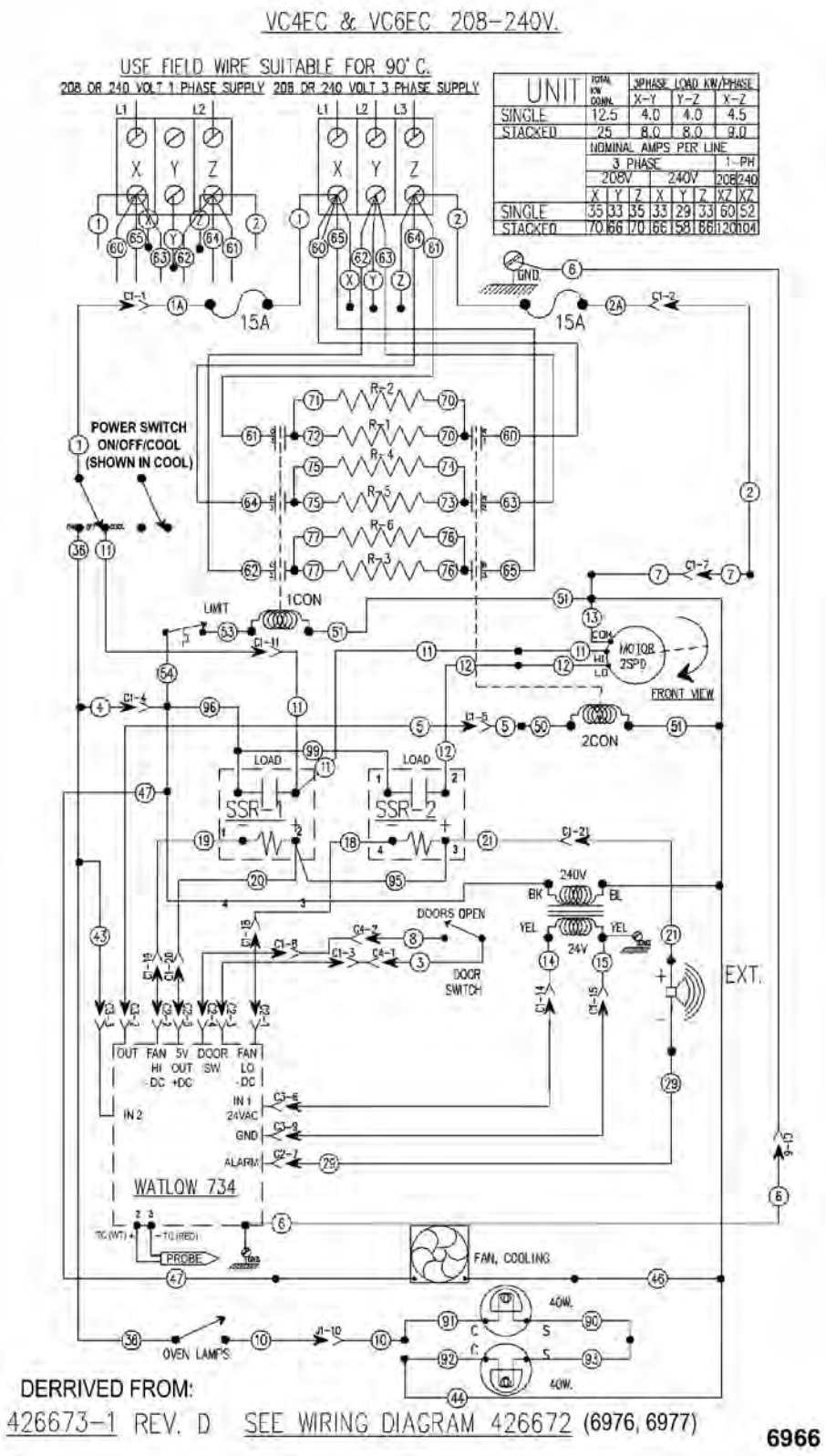

VC4EC, VC6EC Computer Control, 208-240V (Roast & Hold Standard)

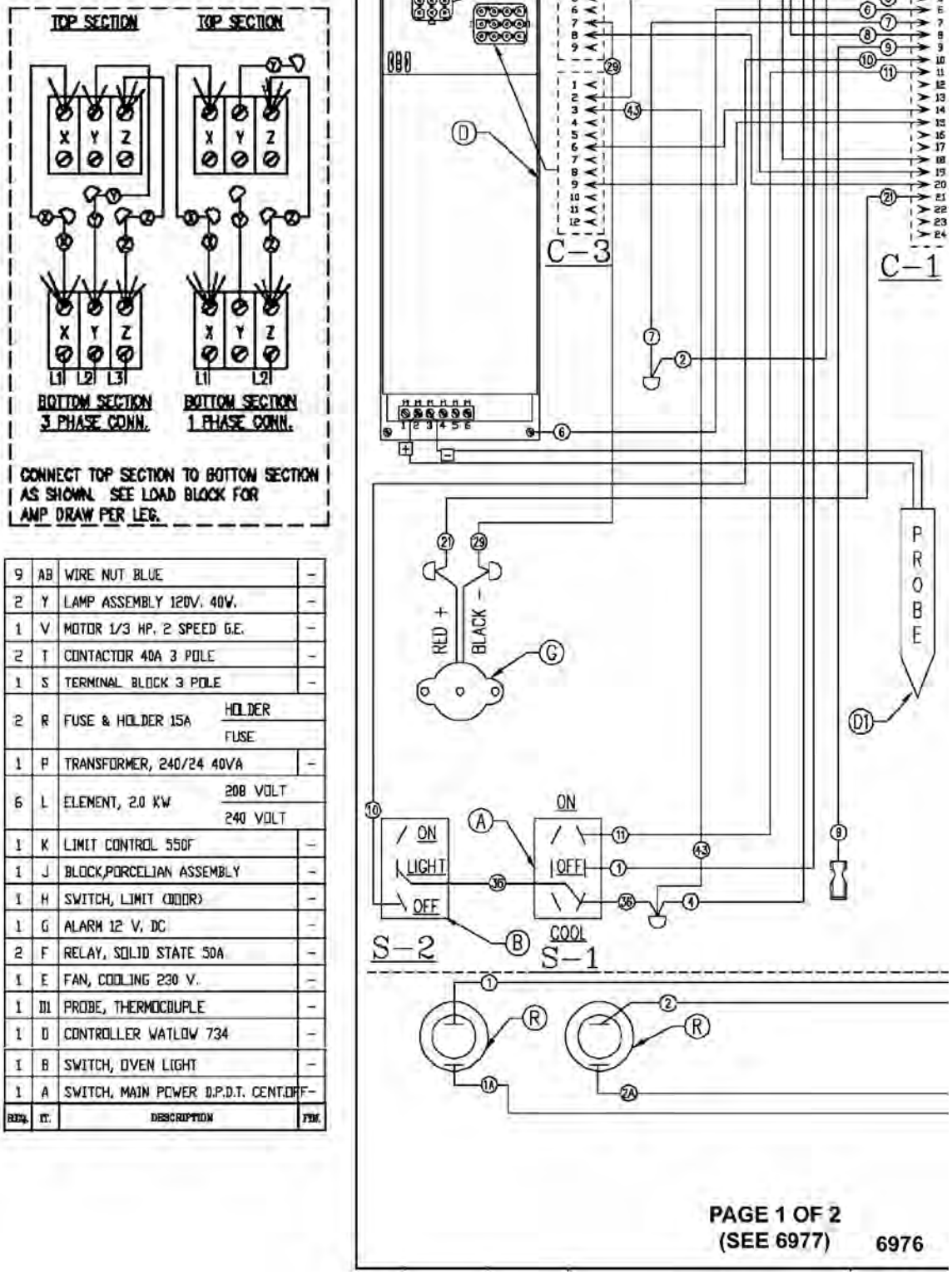

9	AB	WIRE NUT BLUE	–
2	Y	LAMP ASSEMBLY 120V. 40W.	–
1	V	MOTOR 1/3 HP. 2 SPEED G.E.	–
2	T	CONTACTOR 40A 3 POLE	–
1	S	TERMINAL BLOCK 3 POLE	–
2	R	FUSE & HOLDER 15A — HOLDER / FUSE	
1	P	TRANSFORMER, 240/24 40VA	–
6	L	ELEMENT, 2.0 KW — 208 VOLT / 240 VOLT	
1	K	LIMIT CONTROL 550F	–
1	J	BLOCK,PORCELIAN ASSEMBLY	–
1	H	SWITCH, LIMIT (DOOR)	–
1	G	ALARM 12 V. DC	–
2	F	RELAY, SOLID STATE 50A	–
1	E	FAN, COOLING 230 V.	–
1	D1	PROBE, THERMOCOUPLE	–
1	D	CONTROLLER WATLOW 734	–
1	B	SWITCH, OVEN LIGHT	–
1	A	SWITCH, MAIN POWER D.P.D.T. CENT.OFF	–
REQ.	IT.	DESCRIPTION	ITEM

VC4EC, VC6EC Computer Control, 208-240V (Roast & Hold Standard)

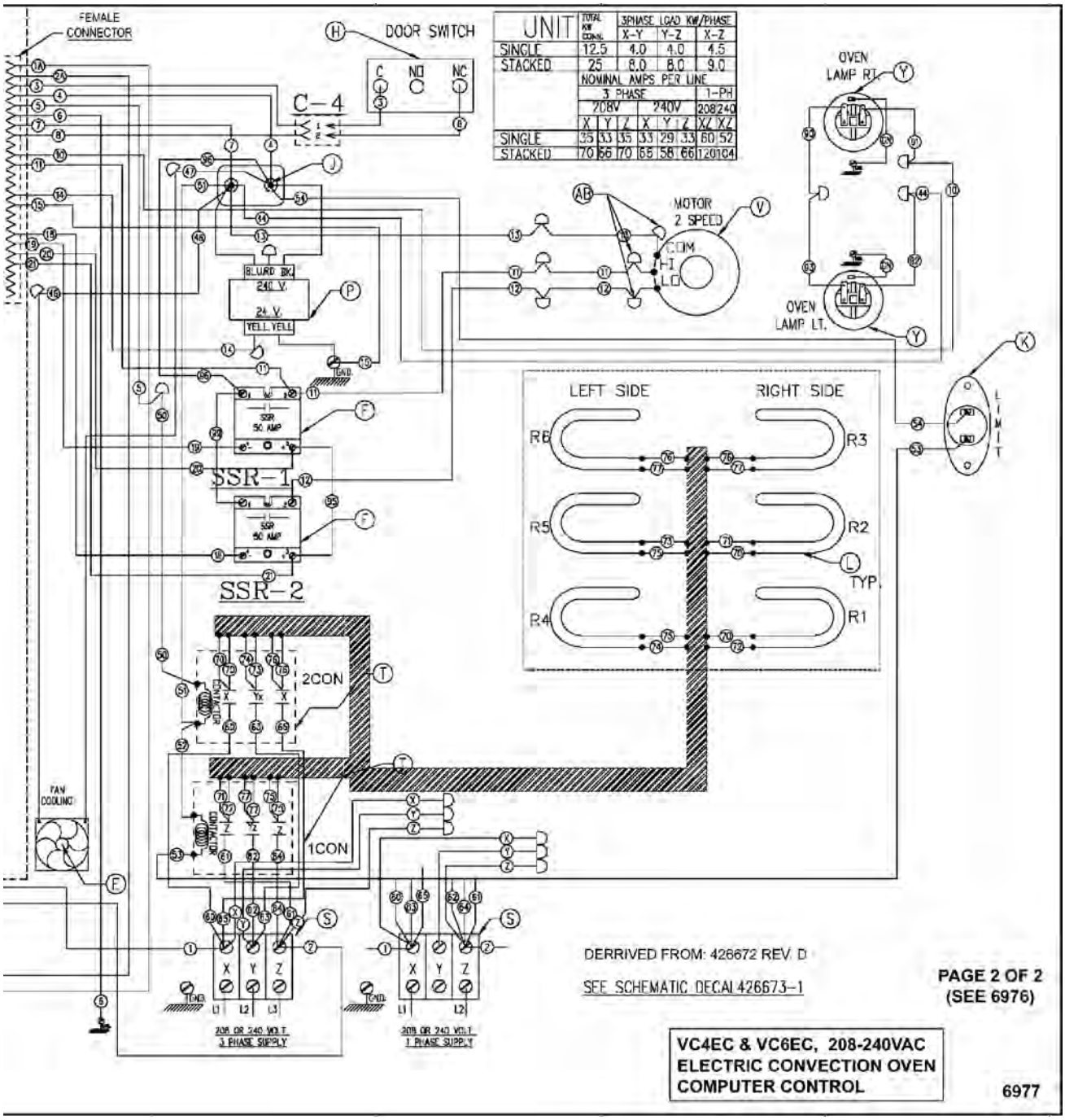
FEMALE CONNECTOR
DOOR SWITCH
C-4
SSR-1
SSR-2
2CON
1CON
MOTOR 2 SPEED
COM
HI
LO
OVEN LAMP RT.
OVEN LAMP LT.
LEFT SIDE
RIGHT SIDE
R6
R3
R5
R2
R4
R1
TYP.
LIMIT
FAN COOLING
BLU/RD BK
240 V.
24 V.
YELL YELL
UNIT
SINGLE
STACKED
3 PHASE
1-PH
208V
240V
208/240
DERRIVED FROM: 426672 REV. D
SEE SCHEMATIC DECAL 426673-1
PAGE 2 OF 2
(SEE 6976)
VC4EC & VC6EC, 208-240VAC
ELECTRIC CONVECTION OVEN
COMPUTER CONTROL
6977

Fig. 100

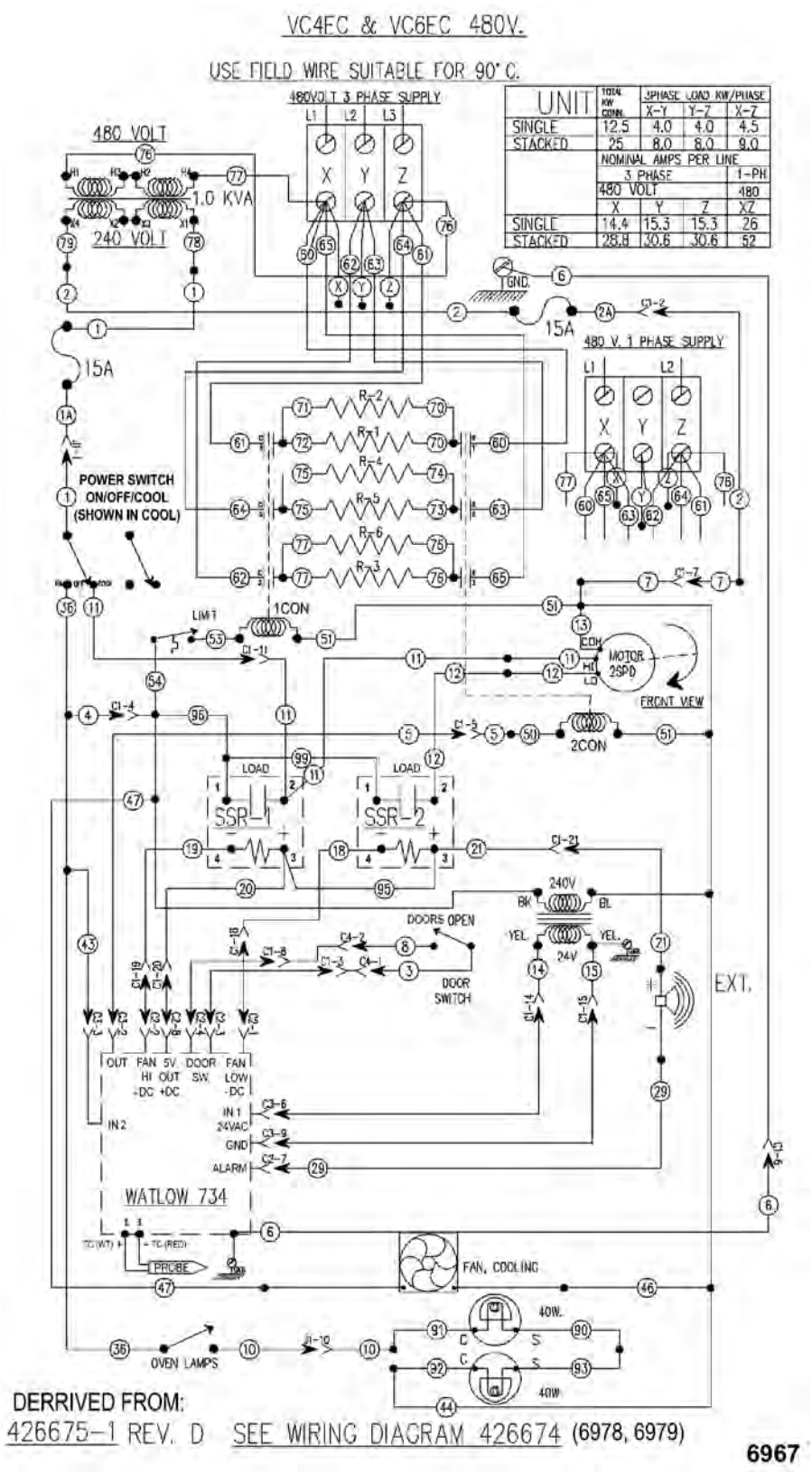

UNIT	TOTAL KW CONN.	3PHASE LOAD KW/PHASE		
		X-Y	Y-Z	X-Z
SINGLE	12.5	4.0	4.0	4.5
STACKED	25	8.0	8.0	9.0
	NOMINAL AMPS PER LINE			
	3 PHASE			1-PH
	480 VOLT			480
	X	Y	Z	XZ
SINGLE	14.4	15.3	15.3	26
STACKED	28.8	30.6	30.6	52

VC4EC, VC6EC Computer Control, 480V (Roast & Hold Standard)

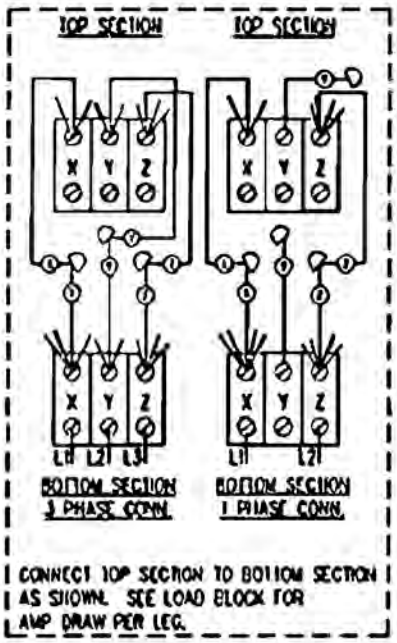

REQ.	IT.	DESCRIPTION	PTN.
9	AB	WIRE NUT BLUE	-
1	Z	TRANSFORMER 1KVA 480-240 V.	-
2	Y	LAMP ASSEMBLY 120V 40W.	-
1	V	MOTOR 1/3 HP 2 SPEED G.E.	-
2	T	CONTACTOR 40A 3 POLE	-
1	S	TERMINAL BLOCK 3 POLE	-
2	R	FUSE & HOLDER 15A HOLDER / FUSE	
1	P	TRANSFORMER, 240/24 40VA	-
6	L	ELEMENT, 2.0 KW. 400V.	-
1	K	LIMIT CONTROL 550F	-
2	J	BLOCK,PORCELIAN ASSEMBLY	-
1	H	SWITCH, LIMIT (DOOR)	-
1	G	ALARM 12 V. DC	-
2	F	RELAY, SOLID STATE 50A	-
1	E	FAN, COOLING 230 V.	-
1	D1	PROPE, THERMOCOUPLE	-
1	D	CONTROLLER WATLOW 734	-
1	B	SWITCH, OVEN LIGHT	-
1	A	SWITCH, MAIN POWER D.P.D.T. CENT.OFF	-

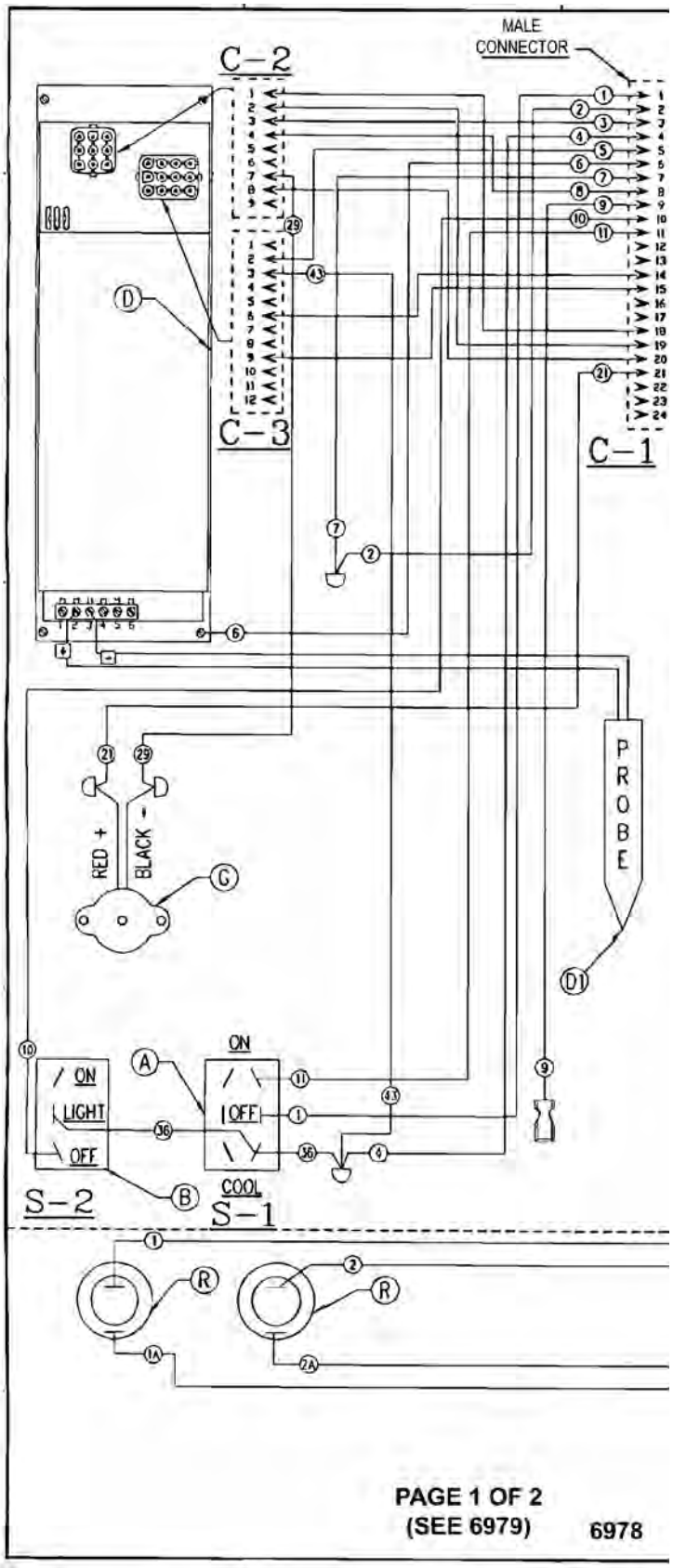

VC4EC, VC6EC Computer Control, 480V (Roast & Hold Standard)

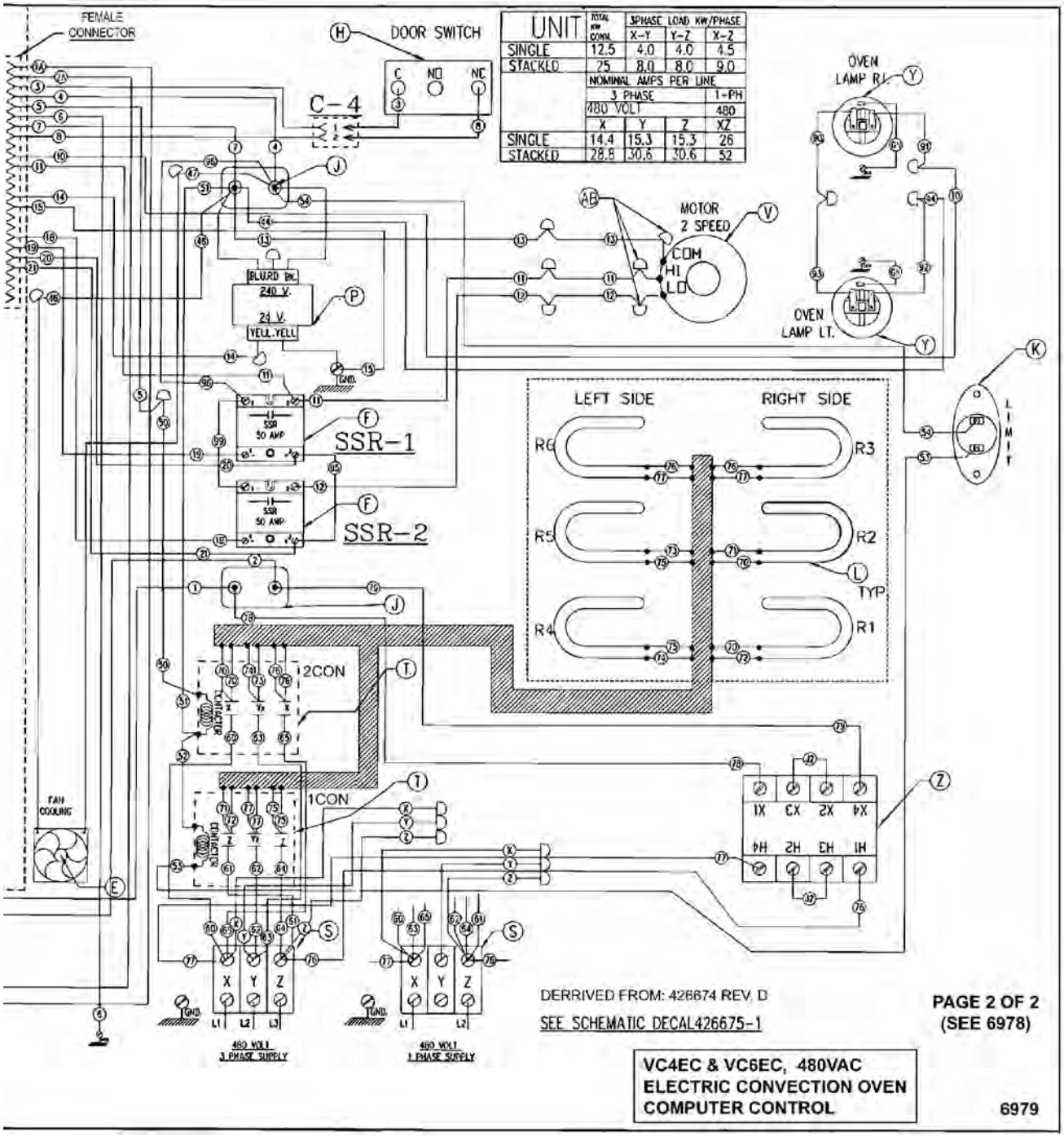

Fig. 103

VC4ED & 6, HEC5, WKED - 480V - 00-962507E - AI5716

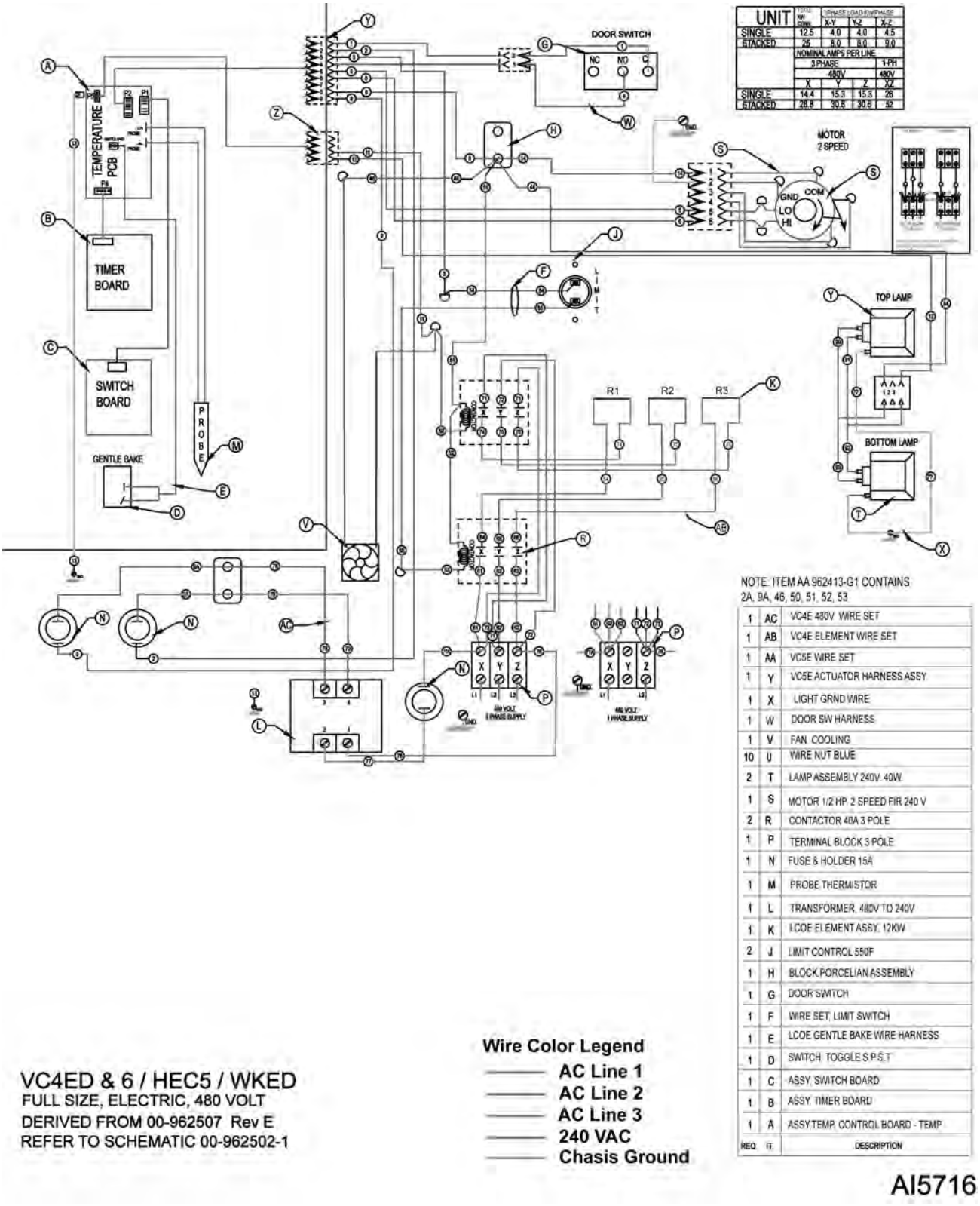

Fig. 104

HEC5 & X-VC4ED & 6- WKED & X - 480V - 00-426668Q - AI5738 PDF Link

- HEC5 & X-VC4ED & 6- WKED & X - 480V - 00-426668Q - AI5738

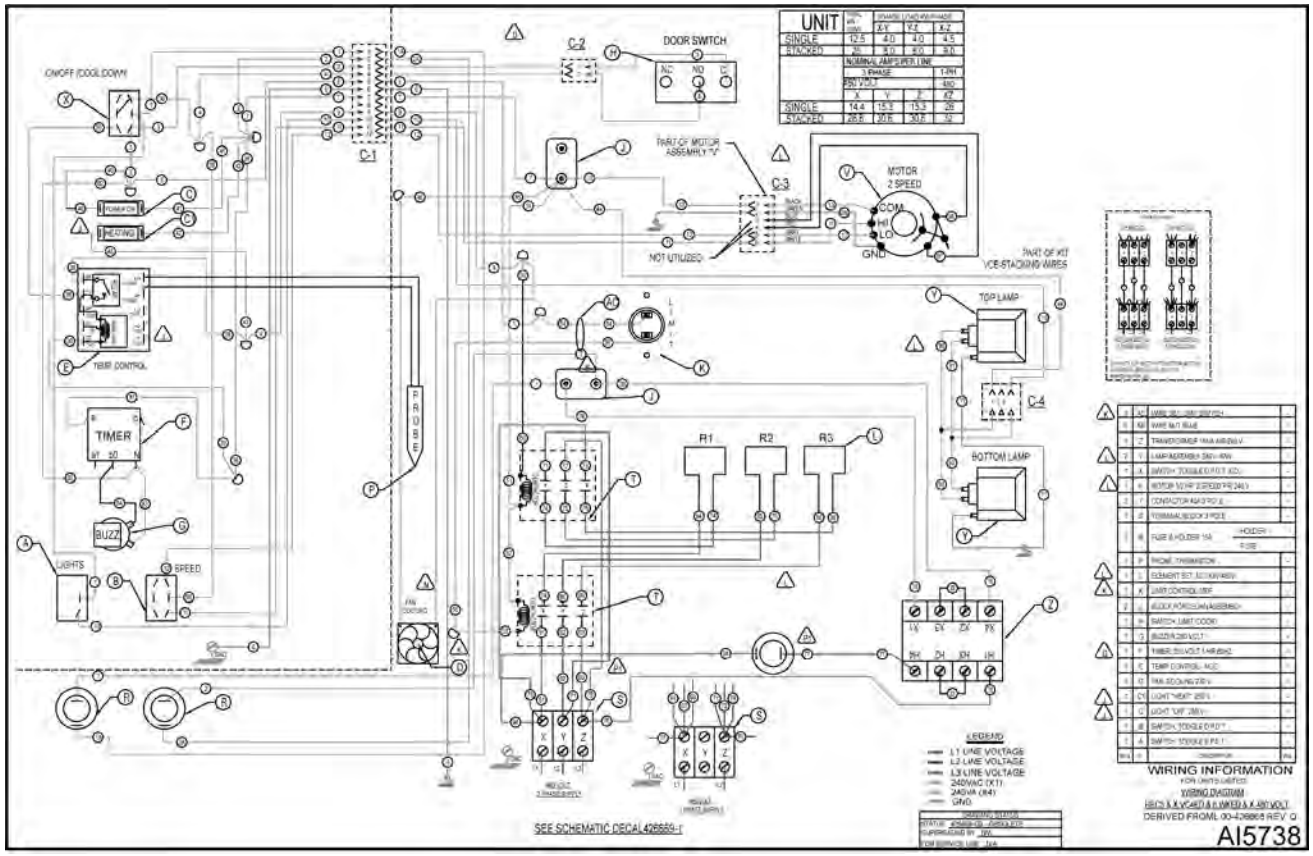

Fig. 105

WKED & X, VC4ED & 6, HEC5 & X - 480C - 42669-1J - AI5718 PDF Link

- WKED & X, VC4ED & 6, HEC5 & X - 480C - 42669-1J - AI5718

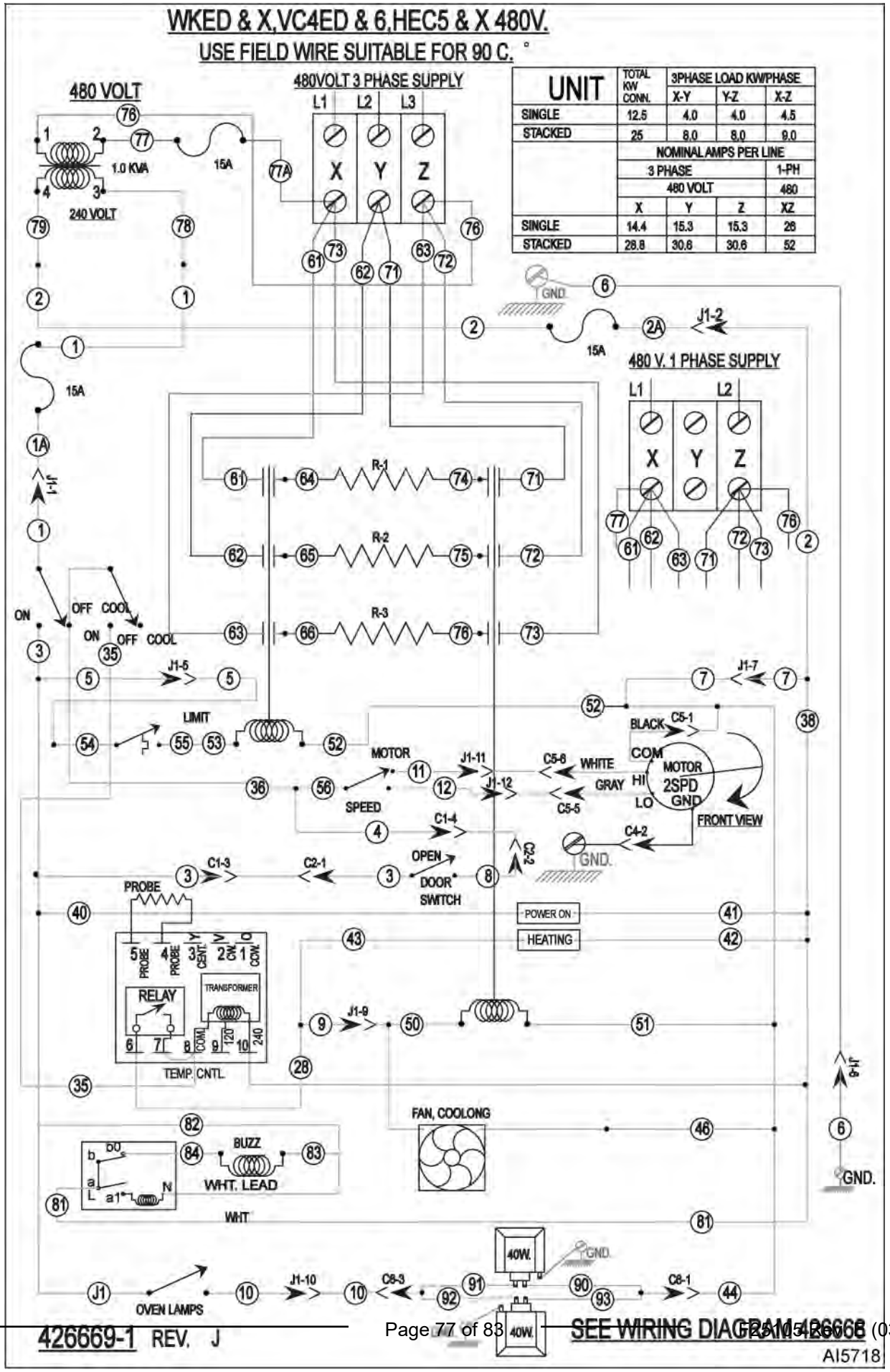

UNIT	TOTAL KW CONN.	3PHASE LOAD KW/PHASE		
		X-Y	Y-Z	X-Z
SINGLE	12.5	4.0	4.0	4.5
STACKED	25	8.0	8.0	9.0
	NOMINAL AMPS PER LINE			
	3 PHASE			1-PH
	480 VOLT			480
	X	Y	Z	XZ
SINGLE	14.4	15.3	15.3	26
STACKED	28.8	30.6	30.6	52

Fig. 106

VC5ED X - 480V - 962502-1E - AI5717 PDF Link

- VC5ED X - 480V - 962502-1E - AI5717

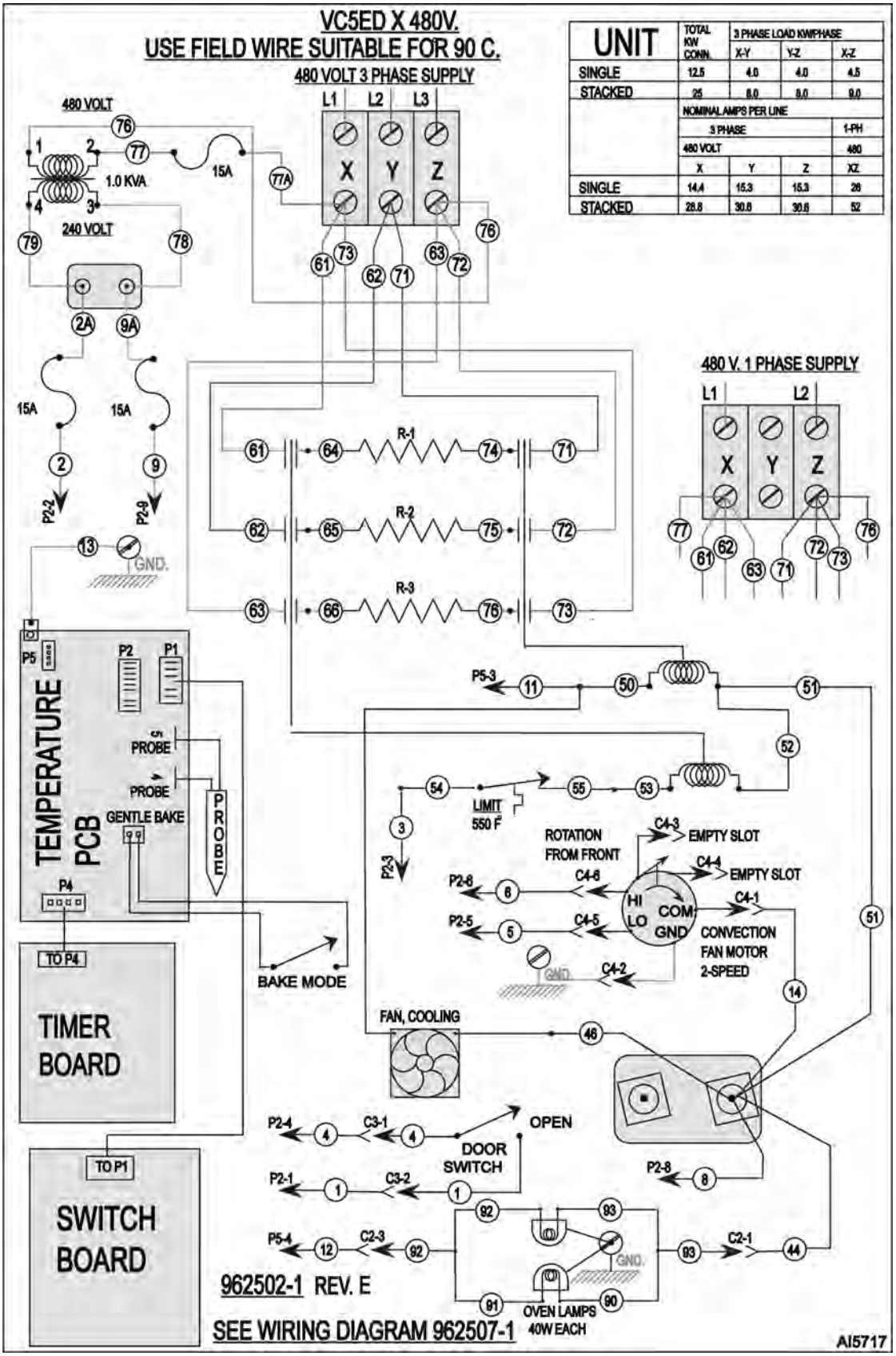
VC5ED X 480V.
USE FIELD WIRE SUITABLE FOR 90 C.
480 VOLT 3 PHASE SUPPLY
480 V. 1 PHASE SUPPLY
UNIT
TOTAL KW CONN.
3 PHASE LOAD KW/PHASE
X-Y
Y-Z
X-Z
SINGLE
12.5
4.0
4.0
4.5
STACKED
25
8.0
8.0
9.0
NOMINAL AMPS PER LINE
3 PHASE
1-PH
480 VOLT
480
X
Y
Z
XZ
SINGLE
14.4
15.3
15.3
28
STACKED
28.8
30.6
30.6
52
480 VOLT
1.0 KVA
240 VOLT
15A
R-1
R-2
R-3
GND.
TEMPERATURE PCB
PROBE
GENTLE BAKE
TO P4
TIMER BOARD
TO P1
SWITCH BOARD
BAKE MODE
LIMIT 550 F
ROTATION FROM FRONT
EMPTY SLOT
HI
LO
COM
GND
CONVECTION FAN MOTOR 2-SPEED
FAN, COOLING
DOOR SWITCH
OPEN
OVEN LAMPS 40W EACH
962502-1 REV. E
SEE WIRING DIAGRAM 962507-1
AI5717

Fig. 107

TROUBLESHOOTING

TROUBLESHOOTING

⚠ WARNING

Certain procedures in this section require electrical test or measurements while power is applied to the machine. Exercise extreme caution at all times. If test points are not easily accessible, disconnect power and follow lockout / tagout procedures, attach test equipment and reapply power to the test.

SYMPTOMS	POSSIBLE CAUSES
Blower motor doesn't run with power switch in "ON" "COOL DOWN" or position.	1. Line voltage incorrect. 2. Power switch (S1) malfunction. 3. Fan speed switch (S3) malfunction. 4. Interconnecting wiring malfunction. 5. Motor inoperative.
Blower motor doesn't run with power switch "ON", but oven heats.	1. Door switch malfunction. 2. Interconnecting wiring malfunction. 3. Motor inoperative.
Blower motor doesn't run in "Cool Down", but runs ok in "ON" position.	1. Power switch (S1) malfunction. 2. Fan speed switch (S3) malfunction. 3. Interconnecting wiring malfunction.
Excessive or low heat in oven.	1. Line voltage incorrect. 2. Heating element malfunction. 3. Contactor malfunction. 4. Convection Fan motor malfunction. 5. Temperature probe malfunction or mechanical thermostat malfunction. 6. Temperature control not calibrated. 7. Temperature control malfunction.
Mechanical Timer inoperative or not functioning properly.	1. Interconnecting wiring malfunction. 2. Line voltage incorrect. 3. Timer malfunction.
Component cooling Fan does not run.	1. Motor inoperable. 2. Interconnecting wiring malfunction.

SYMPTOMS	POSSIBLE CAUSES
Uneven Cooking.	1. Convection Fan motor speed/direction. 2. Air flow Baffles missing or damaged. 3. Line voltage incorrect. 4. Heating element(s) malfunction. 5. Contactor malfunction.
Intermittent operation problems.	1. High ambient temperatures. 2. Wiring connections loose. 3. Cooling fan malfunction.
No power to oven controls.	1. Main circuit breaker OPEN. 2. Control circuit fuses OPEN. 3. Power switch (S1) inoperative.
No heat, convection fan motor runs.	1. High limit thermostat OPEN. 2. Heating element malfunction. 3. Contactor malfunction. 4. Temperature control malfunction.
No power to temperature control.	1. Power switch (S1) in "Cool Down". 2. Door or door switch open.
Door does not seal or shut properly	1. Doors out of adjustment. 2. Door chain out of adjustment or broken (simultaneous doors). 3. Door catch roller out of adjustment or broken (independent doors). 4. Door seals damaged.

COMPUTER CONTROL MODELS ONLY

SYMPTOM	POSSIBLE CAUSES
Oven does not heat.	1. High limit switch open. 2. Temperature probe malfunction. 3. Computer control malfunction.
High limit thermostat shutting OFF heat.	1. Temperature probe malfunction. 2. Computer control malfunction.
Oven not hot enough.	1. Temperature probe malfunction. 2. Computer control range high (rH1) setting to low. See SETUP MODE under COMPUTER CONTROL. 3. Computer control malfunction.

SYMPTOM	POSSIBLE CAUSES
Blower motor doesn't run with power switch in "ON" or "COOL DOWN" position.	1. Line voltage incorrect. 2. Power switch (S1) malfunction. 3. Fan speed switch (S3) malfunction. 4. Solid sate relay (SSR) malfunction. See SOLID STATE RELAY TEST under COMPUTER CONTROL. 5. Interconnecting wiring malfunction. 6. Motor inoperative. 7. Computer control malfunction. See COMPUTER CONTROL OPERATIONAL TEST.

Error Codes

In the display window, the error code will alternate between the code and the oven cavity temperature or dashes if the oven is calling for heat (heat light on). The exact error code displayed will depend on the priority assigned to the problem in the EPROM'S software. The lower the error code number, the higher the priority. If more than one problem occurs at the same time, the error code assigned to the higher priority problem will be displayed. Refer to the error code table below to solve the problem. If the lower priority problem still exists, the next error code will be displayed. When the condition causing the error is resolved, normal oven operation can resume.

NOTE: To check a "Setup Parameter" and its corresponding "Data Value", see SETUP MODE under COMPUTER CONTROL.

NOTE: If the cause of the error is not apparent, check for these conditions as they may also cause errors to occur: Electrical noise or a noise event, excess environmental moisture or temperature, or vibration.

CODE & PROBLEM	PROBABLE CAUSE	SOLUTION
Er01 - ROM checksum error	Internal ROM malfunction	Cycle power
Er02 - RAM checksum error	Internal RAM malfunction	Cycle power
Er03 - Ambient sensor error	Ambient temperature is below 32°F	Check ambient temperature at the control.
Er04 - Configuration error	Microprocessor malfunction	Cycle power
Er05 - EPROM error [1]	Power loss while storing data	Cycle power
Er06 - Zone 1 A/D underflow error	• Incorrect sensor type • Measuring temperature outside the sensor range	• Check the InP1 setup parameter. Verify it matches your sensor. • Check sensor and connections for a reversed or open sensor. If the condition causing the error is resolved, the error will clear.

CODE & PROBLEM	PROBABLE CAUSE	SOLUTION
Er07 - Zone 1 A/D overflow error	Open sensor	• Check the InP1 setup parameter. Verify it matches your sensor. • Check sensor and connections for a reversed or open sensor. If the condition causing the error is resolved, the error will clear.
Er10 - Stack overflow error	Microprocessor malfunction	• Cycle power • Check sensor and connections for a reversed or open sensor
Er11 - Open sensor error	Open sensor	• Check the InP1 setup parameter. Verify it matches your sensor. • Check sensor and connections for a reversed or open sensor
Er12 - Shorted sensor	• Incorrect sensor type • Measuring temperature outside the sensor range	• Check the InP1 setup parameter. Verify it matches your sensor. • Check sensor and connections for a reversed or open sensor
[1] Should only see when a new EPROM is installed and powered for the first time.		

WKED & X,VC4ED & 6,HEC5 & X 208-240V.

USE FIELD WIRE SUITABLE FOR 90°C.

UNIT	TOTAL KW CONN.	3PHASE LOAD KW/PHASE		
		X-Y	Y-Z	X-Z
SINGLE	12.5	4.0	4.0	4.5
STACKED	25	8.0	8.0	9.0

	NOMINAL AMPS PER LINE							
	3 PHASE						1-PH	
	208V			240V			208	240
	X	Y	Z	X	Y	Z	XZ	XZ
SINGLE	35	33	35	33	29	33	60	52
STACKED	70	66	70	66	58	66	120	104

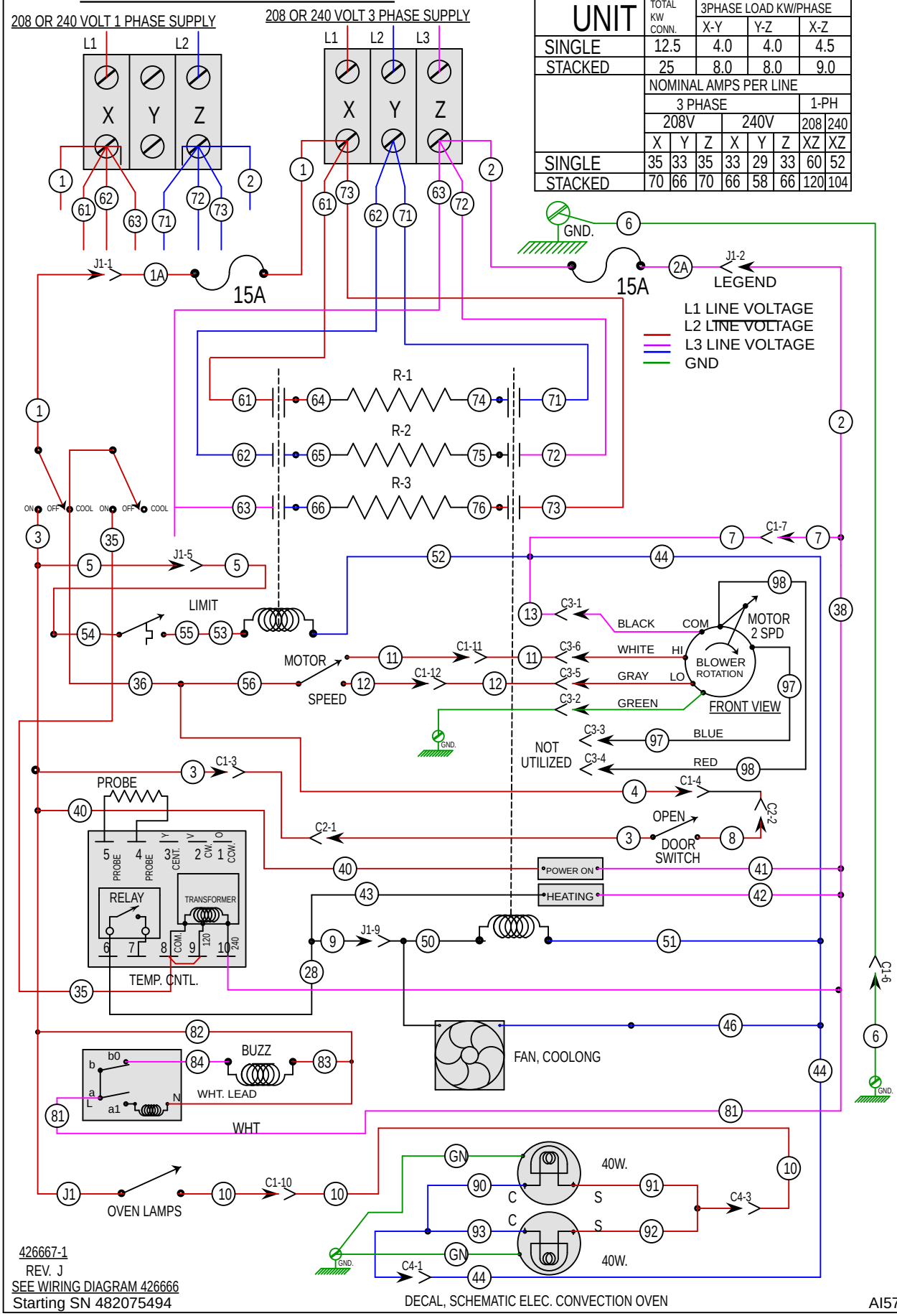

UNIT	TOTAL KW CONN.	3PHASE LOAD KW/PHASE		
		X-Y	Y-Z	X-Z
SINGLE	12.5	4.0	4.0	4.5
STACKED	25	8.0	8.0	9.0

	NOMINAL AMPS PER LINE							
	3 PHASE						1-PH	
	208V			240V			208	240
	X	Y	Z	X	Y	Z	XZ	XZ
SINGLE	35	33	35	33	29	33	60	52
STACKED	70	66	70	66	58	66	120	104

CODES			
J		X	
E		V	
W		A	
MAN		PMI	
ACAD	X	VC	-
NC			

REQ.	IT.	DESCRIPTION	FIN.
1	AC	WIRE SET, LIMIT SWITCH	-
10	AB	WIRE NUT BLUE	-
2	Y	LAMP ASSEMBLY 240V. 40W.	-
1	X	SWITCH, TOGGLE D.P.D.T. (CO)	-
1	V	MOTOR 1/2 HP. 2 SPEED FIR 240 V	-
2	T	CONTACTOR 40A 3 POLE	-
1	S	TERMINAL BLOCK 3 POLE	-
2	R	FUSE & HOLDER 15A — HOLDER / FUSE	
1	P	PROBE,THERMISTOR	-
1	L	ELEMENT, 12.0 KW — 208 VOLT / 240 VOLT	
1	K	LIMIT CONTROL 550F	-
1	J	BLOCK,PORCELIAN ASSEMBLY	-
1	H	SWITCH, LIMIT (DOOR)	-
1	G	BUZZER 230 VOLT	-
1	F	TIMER, 230 VOLT 1-HR 60HZ	-
1	E	TEMP. CONTROL - NCC	-
1	D	FAN, COOLING 230 V.	-
1	C1	LIGHT, "HEAT" 250 V.	-
1	C	LIGHT, "ON" 250 V.	-
1	B	SWITCH, TOGGLE D.P.D.T	-
1	A	SWITCH, TOGGLE S.P.S.T	-

LEGEND
- L1 LINE VOLTAGE
- L2 LINE VOLTAGE
- L3 LINE VOLTAGE
- GND

DRAWING STATUS
STATUS 426666-G2 - OBSOLETE
SUPERSEDED BY N/A
FOR SERVICE USE N/A

WIRING INFORMATION

FOR UNITS LISTED

WIRING DIAGRAM

HEC5 & X,VC4ED & 6,WKED & X 208-240 VOLT

DERIVED FROM: 00-426666 REV S1

AI5736

WKED & X,VC4ED & 6,HEC5 & X 208-240V.

USE FIELD WIRE SUITABLE FOR 90 C.°

UNIT	TOTAL KW CONN.	3PHASE LOAD KW/PHASE		
		X-Y	Y-Z	X-Z
SINGLE	12.5	4.0	4.0	4.5
STACKED	25	8.0	8.0	9.0
	NOMINAL AMPS PER LINE			
	3 PHASE			1-PH
	208V		240V	208 240
	X	Y	Z	X	Y	Z	XZ	XZ
SINGLE	35	33	35	33	29	33	60	52
STACKED	70	66	70	66	58	66	120	104

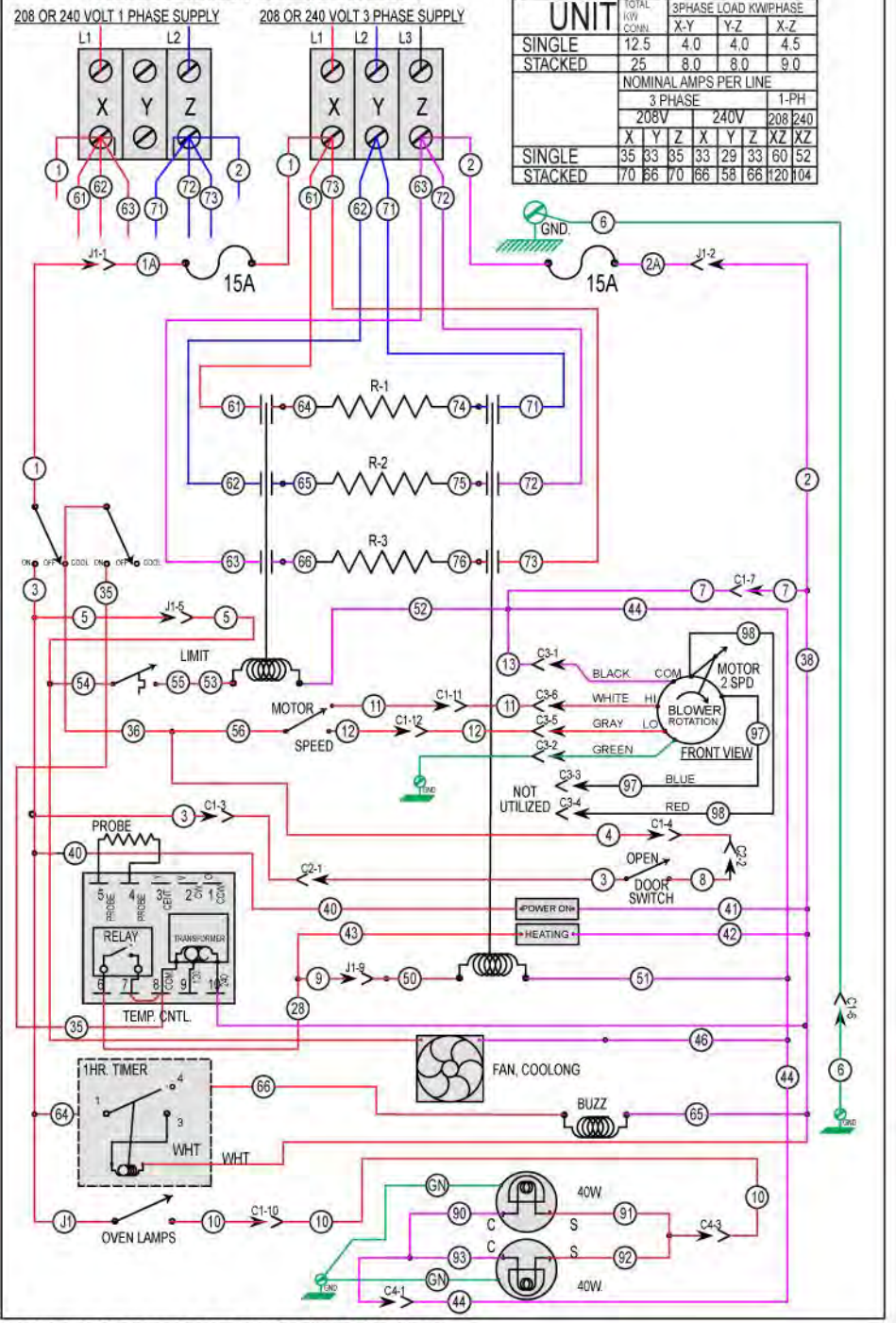

WKED & X,VC4ED & 6,HEC5 & X 208-240V.

DERIVED FROM 426667-1 Rev G

STARTING SERIAL NUMBER 481916864

AI4899

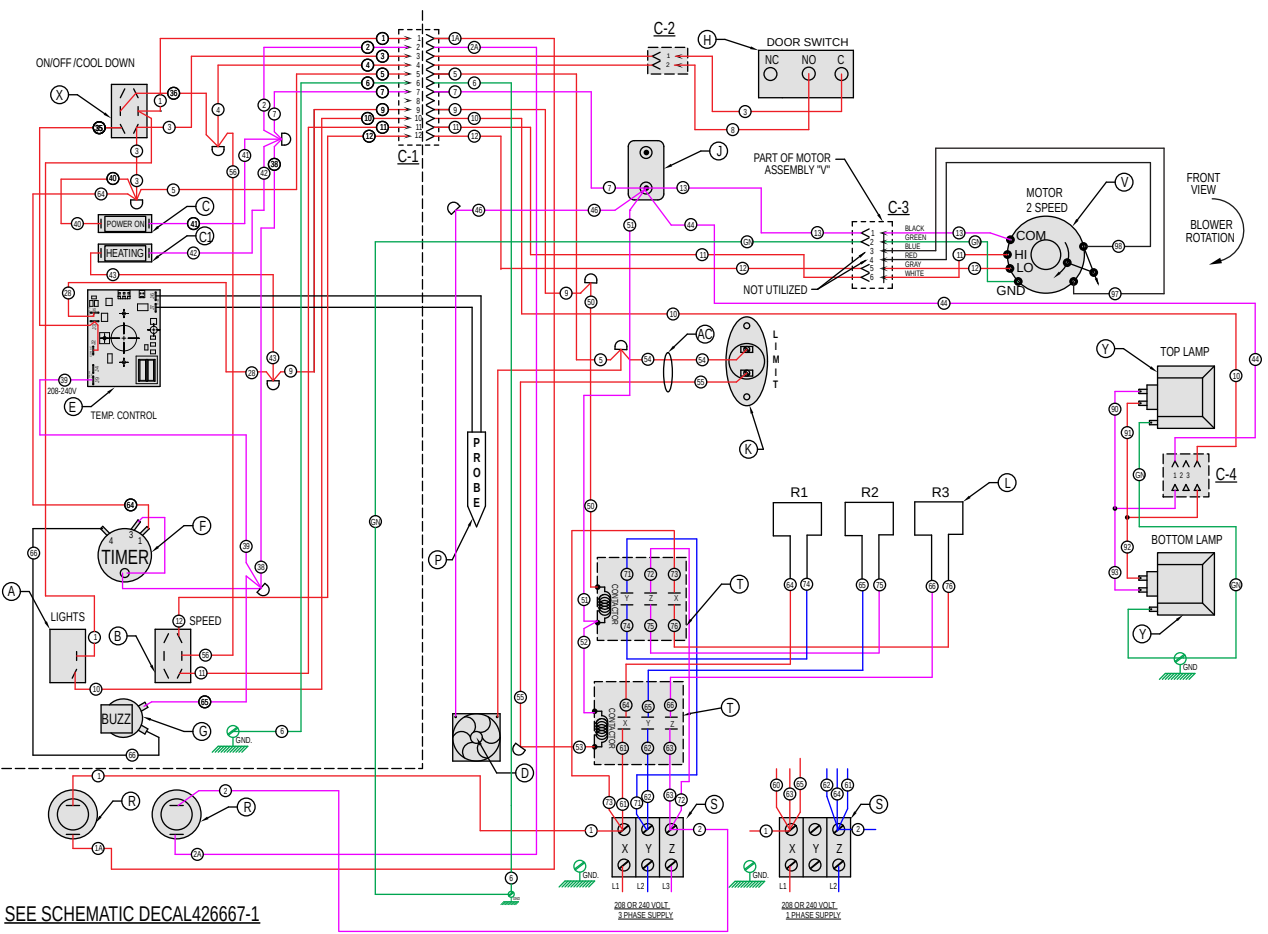

SEE SCHEMATIC DECAL426667-1

HEC5 & X, VC4ED & 6, WKED & X 208-240V

DERIVED FROM 426666

AI4892

UNIT	TOTAL KW CONN.	3PHASE LOAD KW/PHASE		
		X-Y	Y-Z	X-Z
SINGLE	12.5	4.0	4.0	4.5
STACKED	25	8.0	8.0	9.0
	NOMINAL AMPS PER LINE			
	3 PHASE			1-PH
	480V			480V
	X	Y	Z	XZ
SINGLE	14.4	15.3	15.3	26
STACKED	28.8	30.6	30.6	52

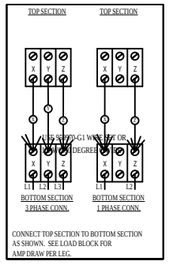

NOTE: ITEM AA 962413-G1 CONTAINS
2A, 9A, 46, 50, 51, 52, 53

REQ.	IT.	DESCRIPTION
1	AC	VC4E 480V WIRE SET
1	AB	VC4E ELEMENT WIRE SET
1	AA	VC5E WIRE SET
1	Y	VC5E ACTUATOR HARNESS ASSY
1	X	LIGHT GRND WIRE
1	W	DOOR SW HARNESS
1	V	FAN, COOLING
10	U	WIRE NUT BLUE
2	T	LAMP ASSEMBLY 240V. 40W.
1	S	MOTOR 1/2 HP. 2 SPEED FIR 240 V
2	R	CONTACTOR 40A 3 POLE
1	P	TERMINAL BLOCK 3 POLE
1	N	FUSE & HOLDER 15A
1	M	PROBE,THERMISTOR
1	L	TRANSFORMER, 480V TO 240V
1	K	LCOE ELEMENT ASSY, 12KW
2	J	LIMIT CONTROL 550F
1	H	BLOCK,PORCELIAN ASSEMBLY
1	G	DOOR SWITCH
1	F	WIRE SET, LIMIT SWITCH
1	E	LCOE GENTLE BAKE WIRE HARNESS
1	D	SWITCH, TOGGLE S.P.S.T
1	C	ASSY, SWITCH BOARD
1	B	ASSY, TIMER BOARD
1	A	ASSY,TEMP, CONTROL BOARD - TEMP

Wire Color Legend
- AC Line 1
- AC Line 2
- AC Line 3
- 240 VAC
- Chasis Ground

VC4ED & 6 / HEC5 / WKED
FULL SIZE, ELECTRIC, 480 VOLT
DERIVED FROM 00-962507 Rev E
REFER TO SCHEMATIC 00-962502-1

AI5716

UNIT	TOTAL KW CONN.	3PHASE LOAD KW/PHASE		
		X-Y	Y-Z	X-Z
SINGLE	12.5	4.0	4.0	4.5
STACKED	25	8.0	8.0	9.0

	NOMINAL AMPS PER LINE			
	3 PHASE			1-PH
	480 VOLT			480
	X	Y	Z	XZ
SINGLE	14.4	15.3	15.3	26
STACKED	28.8	30.6	30.6	52

ON/OFF /COOL DOWN

C-1

C-2

DOOR SWITCH

NC NO C

PART OF MOTOR ASSEMBLY "V"

C-3

BLACK
GREEN
BLUE
RED
GRAY
WHITE

NOT UTILIZED

MOTOR 2 SPEED

COM
HI
LO
GND

PART OF KIT VCE-STACKING WIRES

POWER ON

HEATING

RELAY

PROBE

CENT.

CW.

CCW.

TRANSFORMER

TEMP. CONTROL

TIMER

BUZZ

LIGHTS

SPEED

FAN COOLING

PROBE

CONTACTOR

R1 R2 R3

LIMIT

TOP LAMP

BOTTOM LAMP

C-4

1 2 3

STACKED OVENS

TOP SECTION

TOP SECTION

BOTTOM SECTION 3 PHASE CONN.

BOTTOM SECTION 1 PHASE CONN.

CONNECT TOP SECTION TO BOTTOM SECTION AS SHOWN. SEE LOAD BLOCK FOR AMP DRAW PER LEG.

480 VOLT 3 PHASE SUPPLY

480VOLT 1 PHASE SUPPLY

SEE SCHEMATIC DECAL426669-1

LEGEND

- L1 LINE VOLTAGE
- L2 LINE VOLTAGE
- L3 LINE VOLTAGE
- 240VAC (X1)
- 240VA (X4)
- GND

DRAWING STATUS
STATUS 426668-G2 - OBSOLETE
SUPERSEDED BY N/A
FOR SERVICE USE N/A

REQ.	IT.	DESCRIPTION	FIN.
1	AC	WIRE SET, LIMIT SWITCH	-
9	AB	WIRE NUT BLUE	-
1	Z	TRANSFORMER 1KVA 480-240 V.	-
2	Y	LAMP ASSEMBLY 240V. 40W.	-
1	X	SWITCH, TOGGLE D.P.D.T. (CO)	-
1	V	MOTOR 1/2 HP. 2 SPEED FIR 240 V	-
2	T	CONTACTOR 40A 3 POLE	-
1	S	TERMINAL BLOCK 3 POLE	-
2	R	FUSE & HOLDER 15A — HOLDER / FUSE	-
1	P	PROBE, THERMISTOR	-
1	L	ELEMENT SET, 12.0 KW. 480V.	-
1	K	LIMIT CONTROL 550F	-
2	J	BLOCK,PORCELIAN ASSEMBLY	-
1	H	SWITCH, LIMIT (DOOR)	-
1	G	BUZZER 230 VOLT	-
1	F	TIMER, 230 VOLT 1-HR 60HZ	-
1	E	TEMP. CONTROL - NCC	-
1	D	FAN, COOLING 230 V.	-
1	C1	LIGHT, "HEAT" 250 V.	-
1	C	LIGHT, "ON" 250 V.	-
1	B	SWITCH, TOGGLE D.P.D.T	-
1	A	SWITCH, TOGGLE S.P.S.T	-

WIRING INFORMATION

FOR UNITS LISTED

WIRING DIAGRAM

HEC5 & X,VC4ED & 6,WKED & X 480 VOLT

DERIVED FROML 00-426668 REV. Q

AI5738

WKED & X,VC4ED & 6,HEC5 & X 480V.

USE FIELD WIRE SUITABLE FOR 90 C. °

UNIT	TOTAL KW CONN.	3PHASE LOAD KW/PHASE		
		X-Y	Y-Z	X-Z
SINGLE	12.5	4.0	4.0	4.5
STACKED	25	8.0	8.0	9.0
	NOMINAL AMPS PER LINE			
	3 PHASE			1-PH
	480 VOLT			480
	X	Y	Z	XZ
SINGLE	14.4	15.3	15.3	26
STACKED	28.8	30.6	30.6	52

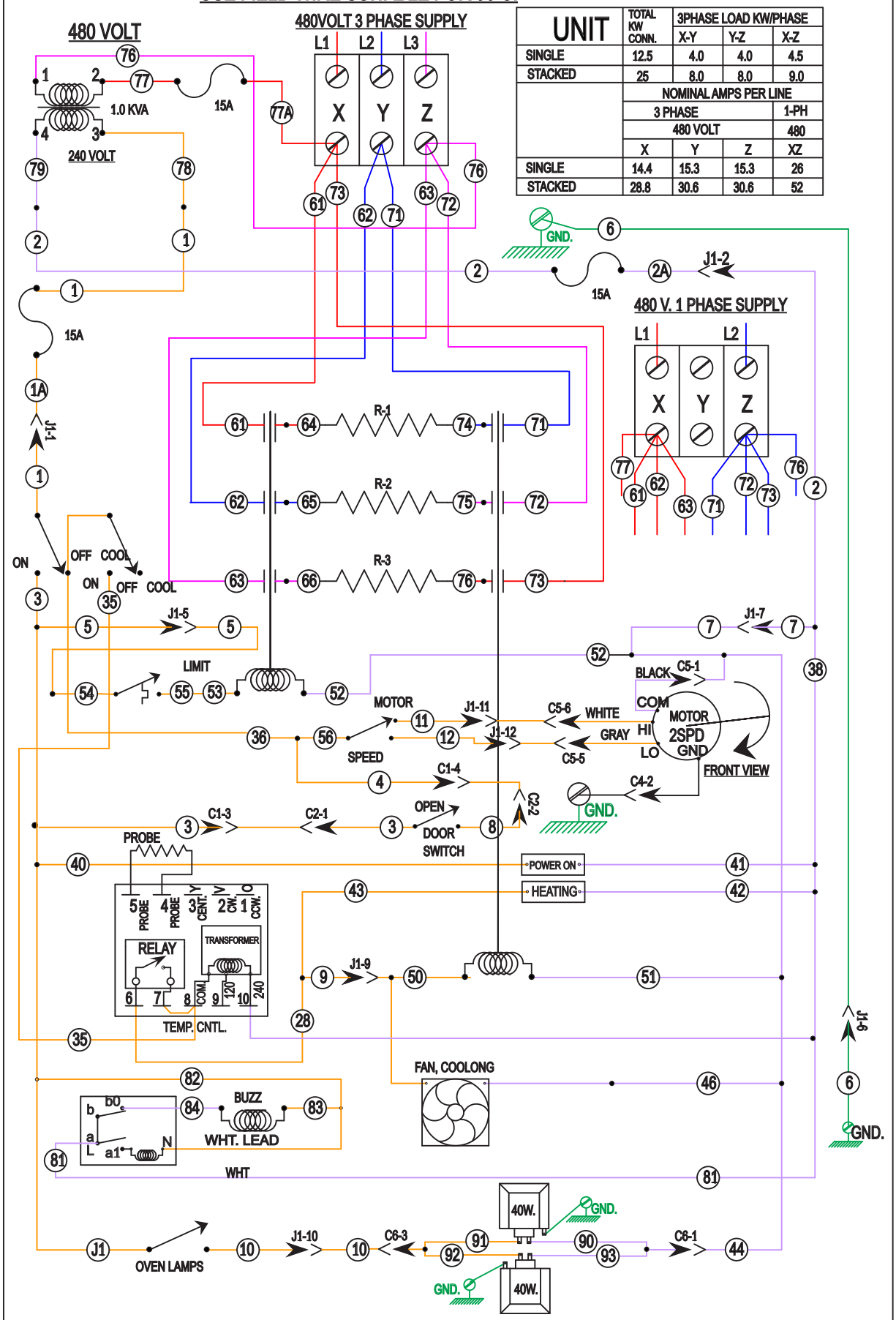

426669-1 REV. J

SEE WIRING DIAGRAM 426668

AI5718

VC5ED X 480V.

USE FIELD WIRE SUITABLE FOR 90 C°

UNIT	TOTAL KW CONN.	3 PHASE LOAD KW/PHASE		
		X-Y	Y-Z	X-Z
SINGLE	12.5	4.0	4.0	4.5
STACKED	25	8.0	8.0	9.0
	NOMINAL AMPS PER LINE			
	3 PHASE			1-PH
	480 VOLT			480
	X	Y	Z	XZ
SINGLE	14.4	15.3	15.3	26
STACKED	28.8	30.6	30.6	52

480 VOLT 3 PHASE SUPPLY

480 VOLT

1.0 KVA

240 VOLT

15A

15A

15A

480 V. 1 PHASE SUPPLY

R-1

R-2

R-3

GND.

TEMPERATURE PCB

PROBE 5

PROBE 4

GENTLE BAKE

PROBE

BAKE MODE

LIMIT 550 F°

ROTATION FROM FRONT

EMPTY SLOT

EMPTY SLOT

HI

LO

COM

GND

CONVECTION FAN MOTOR 2-SPEED

FAN, COOLING

DOOR SWITCH

OPEN

OVEN LAMPS 40W EACH

TO P4

TIMER BOARD

TO P1

SWITCH BOARD

962502-1 REV.E

SEE WIRING DIAGRAM 962507-1

AI5717