SERVICE MANUAL



7415

GR Series GAS Fryers with Tridelta Controls

See "MODEL AND ML NUMBERS" for list of model and ML numbers.

GR Series

- NOTICE -

This Manual is prepared for the use of trained Vulcan Service Technicians and should not be used by those not properly qualified.

This manual is not intended to be all encompassing. If you have not attended a Vulcan Service School for this product, you should read, in its entirety, the repair procedure you wish to perform to determine if you have the necessary tools, instruments and skills required to perform the procedure. Procedures for which you do not have the necessary tools, instruments and skills should be performed by a trained Vulcan Service Technician.

The reproduction, transfer, sale or other use of this Manual, without the express written consent of Vulcan, is prohibited.

This manual has been provided to you by ITW Food Equipment Group LLC ("ITW FEG") without charge and remains the property of ITW FEG, and by accepting this manual you agree that you will return it to ITW FEG promptly upon its request for such return at any time in the future.

TABLE OF CONTENTS

SERVICE UPDATES 4
SERVICE UPDATES - GR SERIES GAS FRYERS 4

GENERAL 5
INTRODUCTION 5
MODEL AND ML NUMBERS 5
SINGLE FLOOR MODEL FRYERS 5
KLEENSCREEN FILTERING SYSTEM 6
SPECIFICATIONS 7
TOOLS 7
CONTROL PANELS 7

REMOVAL AND REPLACEMENT PARTS 10
COVERS AND PANELS 10
COOKING CONTROLS 11
FILTER VALVE AND DISCARD VALVE SWITCHES 11
GAS BURNERS 12
GAS ORIFICES 13
GAS COMBINATION VALVE 13
GAS PILOT 14
TEMPERATURE PROBE 15
HIGH LIMIT THERMOSTAT 16
POWER SUPPLY BOX 17
IGNITION CONTROL MODULE 17
BASKET LIFT TUBE 18
BASKET LIFT MOTOR 18
BASKET LIFT CAM SWITCH 19
BASKET LIFT CAM 19
PUMP AND MOTOR 20
FRY TANK ASSEMBLY 20

SERVICE PROCEDURES AND ADJUSTMENTS 22
TEMPERATURE PROBE TEST 22
PROBE FAULT 22
COOKING CONTROL CALIBRATION 22
ELECTRONIC IGNITION SYSTEM 23
OPERATION 23
FLAME SENSE CURRENT CHECK 23
ELECTRONIC IGNITION CONTROL TEST 24
GAS MANIFOLD PRESSURE ADJUSTMENTS 25
BASKET LIFT ARM ADJUSTMENT 26
SOLID STATE CONTROL - OLDER CONTROLS 26
SOLID STATE CONTROL - NEWER CONTROLS 28
OPERATION 28
ERROR MESSAGES 28
PROGRAMMING 28
COMPUTER CONTROL - OLDER CONTROLS 28
OPERATION 28
SERVICE PROGRAMMING 28
ERROR MESSAGES 29
ENTER SERVICE MODE 29
COMPUTER CONTROL - NEWER CONTROLS 30

ELECTRICAL OPERATION 35
COMPONENT FUNCTION 35
COMPONENT LOCATION 36
POWER SUPPLY BOX 36

SEQUENCE OF OPERATION 37
SOLID STATE OR COMPUTER, COOKING CONTROL 37
KLEENSCREEN FILTERING SYSTEM 39
SCHEMATIC DIAGRAMS 41
WIRING DIAGRAMS 43

TROUBLESHOOTING 49
ALL MODELS 49
SOLID STATE CONTROL 50
COMPUTER CONTROL 51
SOLID STATE OR COMPUTER CONTROL HARNESS PIN-OUTS 51
INTERFACE CONTROL BOARD PIN-OUTS 52
FRYMATE (DUMP STATION) WITH OPTIONAL HEATER 52
KLEENSCREEN FILTERING SYSTEM 52

© VULCAN 2018

SERVICE UPDATES

SERVICE UPDATES - GR SERIES GAS FRYERS

May 2018

- Updated Service Manual and loaded into TIS.

GENERAL

INTRODUCTION

The Service Manual covers specific service information related to the models listed in MODEL AND ML NUMBERS. Current production model fryers are built using a solid state control and computer control from Tridelta Industries (TDI).

MODEL AND ML NUMBERS

Model	ML No.	Model	ML No.
GRD25	ML-052513	GRD35F	ML-126732
GRD35	ML-052080	GRD45F	ML-126735
GRD45	ML-052081	GRD65F	ML-126738
GRD65	ML-052082	GRD85F	ML-126741
GRD85	ML-052306	GRC35F	ML-126733
GRC35	ML-052083	GRC45F	ML-126736
GRC45	ML-052084	GRC65F	ML-126739
GRC65	ML-052085	GRC85F	ML-126742
GRC85	ML-052307		

SINGLE FLOOR MODEL FRYERS

Fryers with the Filter-Ready option installed use the mobile filter. For service information related to the mobile filter, refer to F24599 "MOBILE FILTERS."

An RO Frymate (dump station) can be configured in a battery with fryers 15-1/2 inches or 21 inches in width.

Model Designations

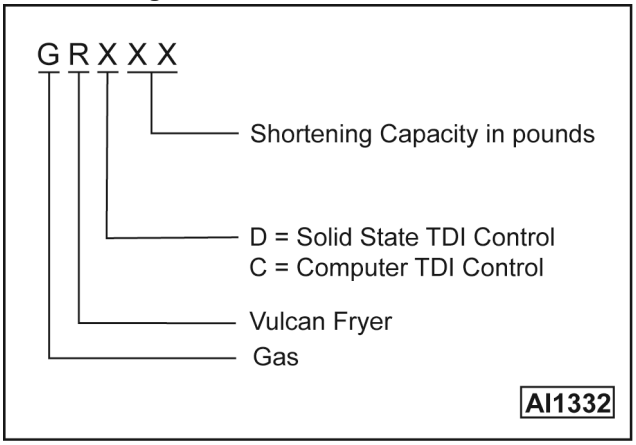

Fig. 1

Models, Features, and Options

MODEL	FEATURES					OPTIONS
	FRYER WIDTH (inches)	FRYING CAPACITY (pounds)	FRY TANK	COOKING CONTROL	COOK TIMER (mm:ss)	AUTOMATIC BASKET LIFTS
GRD25 [1]	10-1/2	25-30	Full	Solid State	0-99:59	Single
GRD35	15-1/2	35-40	Full	Solid State	0-99:59	Single or Dual
GRD45	15-1/2	45-50	Full	Solid State	0-99:59	Single or Dual
GRD65	21	65-70	Full	Solid State	0-99:59	Single or Dual
GRD85	21	85-90	Full	Solid State	0-99:59	Single or Dual
GRC35	15-1/2	35-40	Full	Computer	0-99:59	Single or Dual
GRC45	15-1/2	45-50	Full	Computer	0-99:59	Single or Dual
GRC65	21	65.70	Full	Computer	0-99:59	Single or Dual
GRC85	21	85-90	Full	Computer	0-99:59	Single or Dual
RO15 (Frymate)	15-1/2					
RO21 (Frymate)	21					
RO21S (Frymate)	21					
NOTE:	[1] **Available in battery configurations only.**					

KLEENSCREEN FILTERING SYSTEM

The new "Kleenscreen" filtering system has been integrated into the GR Series fryer battery. The filter is housed in a pull-out drawer assembly at the base of the fryer. The filtering components in the drawer include a stainless steel filter tank, crumb-catch basket, and a dual-element mesh filter screen. With the filter drawer closed, a self-seating oil return line provides the path to return the filtered oil to the fry tank.

This system is designed to provide a thorough and easy method for filtering fryer oil.

Some of the benefits include:

- Self-contained system eliminating the use of external filter equipment.
- Paperless filtering system.
- Easy to clean and low maintenance.

The fryer battery still utilizes many of the same components as the Vulcan GR series fryers.

Kleenscreen fryer batteries are available in a minimum of two and a maximum of six fryer sections. The fryer size of each section is identical.

An RO Frymate (dump station) can also be included as one or more of the sections.

Model Designations

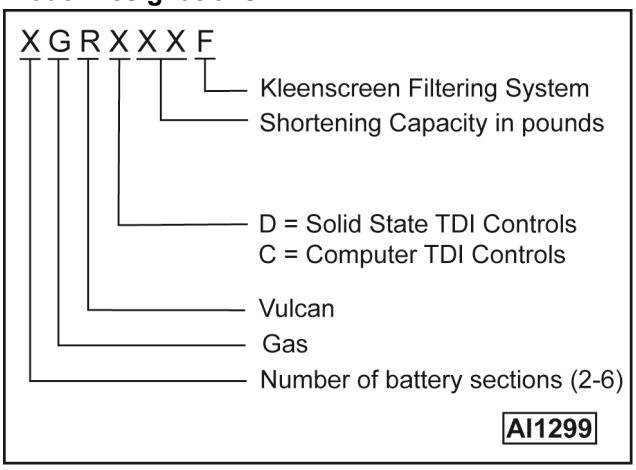

Fig. 2

Models, Features, and Options							
MODEL	FEATURES						OPTIONS
	FRYER WIDTH (inches)	FRYING OIL CAPACITY PER FRYER (pounds)	FILTER PAN CAPACITY (pounds)	FRY TANK	COOKING CONTROL	COOK TIMER (mm:ss)	AUTOMATIC BASKET LIFTS
2GRD35F [1]	31	35-40	80	Full	Solid State	99:59	Single or Dual
2GRD45F [1]	31	45-50	80	Full	Solid State	99:59	Single or Dual
2GRD65F [2]	42	65-70	130	Full	Solid State	99:59	Single or Dual
2GRD85F [2]	42	85-90	130	Full	Solid State	99:59	Single or Dual
2GRC35F [1]	31	35-40	80	Full	Computer	99:59	Single or Dual
2GRC45F [1]	31	45-50	80	Full	Computer	99:59	Single or Dual
2GRC65F [2]	42	65-70	130	Full	Computer	99:59	Single or Dual
2GRC85F [2]	42	85-90	130	Full	Computer	99:59	Single or Dual

Models, Features, and Options							
MODEL	FEATURES						OPTIONS
	FRYER WIDTH (inches)	FRYING OIL CAPACITY PER FRYER (pounds)	FILTER PAN CAPACITY (pounds)	FRY TANK	COOKING CONTROL	COOK TIMER (mm:ss)	AUTOMATIC BASKET LIFTS
RO15 (Frymate)	15-1/2						
RO21 (Frymate)	21						
RO21S (Frymate)	21						
NOTES:	[1] For each additional fryer section, add 15-1/2 inches to the width. [2] For each additional fryer section, add 21 inches to the width.						

SPECIFICATIONS

Electrical

- 120VAC supply. A 24VAC transformer provides power for the fryer controls, basket lift controls (if installed), and the filtering controls on Kleenscreen battery fryers.
- Kleenscreen filter models require a separate 120VAC connection for the filter pump motor (5-amp draw).

Gas Pressures

Manifold (per fryer section):

- Natural - 4" W.C.
- Propane - 10" W.C.

Building supply pressure (min):

- Natural - 5" W.C. (7" W.C. battery units).
- Propane - 11" W.C. (12" W.C. battery units).

NOTE: Propane or Natural gases - 14" W.C. (max).

Input BTU Rating

GR SERIES	NO. OF TUBES	BTU/HR/ SECTION
GRD25	2	60,000
GRD35, GRC35	3	90,000
GRD45, GRC45	4	120,000
GRD65, GRC65	5	150,000
GRD85, GRC85	5	150,000

TOOLS

Standard

- Standard set of hand tools.
- VOM with minimum of NFPA-70E CAT III 600V, UL/CSA/TUV listed. Sensitivity of at least 20,000 ohms per volt. Meter leads must also be rated at CAT III 600V.
- Clamp on type amp meter with minimum of NFPA-70E CAT III 600V, UL/CSA/TUV listed.
- Temperature tester (thermocouple type).
- ESD (Electrostatic discharge) Protection Kit.
- U-Tube manometer.

Special

- Field service grounding kit P/N TL- 84919.
- LOCTITE® 242 P/N 520228 or equivalent.
- Burndy pin extraction tool RX2025 GE1; Newark Electronics Catalog Number 16F6666. Used for removing pin terminals on Burndy connectors.

CONTROL PANELS

Solid State

- OLDER CONTROLS: Five product/programming keys: Left basket (up arrow), Right basket (down arrow), Temperature, Program (V), and Boil.
- NEWER CONTROLS: Five product/ programming keys: Timer Left (up arrow), Timer Right (down arrow), Temperature, Program (V), and Filter.

- OLDER CONTROLS: Four-digit display window that indicates fryer status, time left to cook, and actual or set point temperature.
- NEWER CONTROLS: Eight-digit display window that indicates fryer status, time left to cook, and actual or set point temperature.
- Two LED lamps that illuminate when a basket timer is being programmed, or blink when a timer is activated (left or right basket).

SOLID STATE CONTROL (OLDER) D MODEL

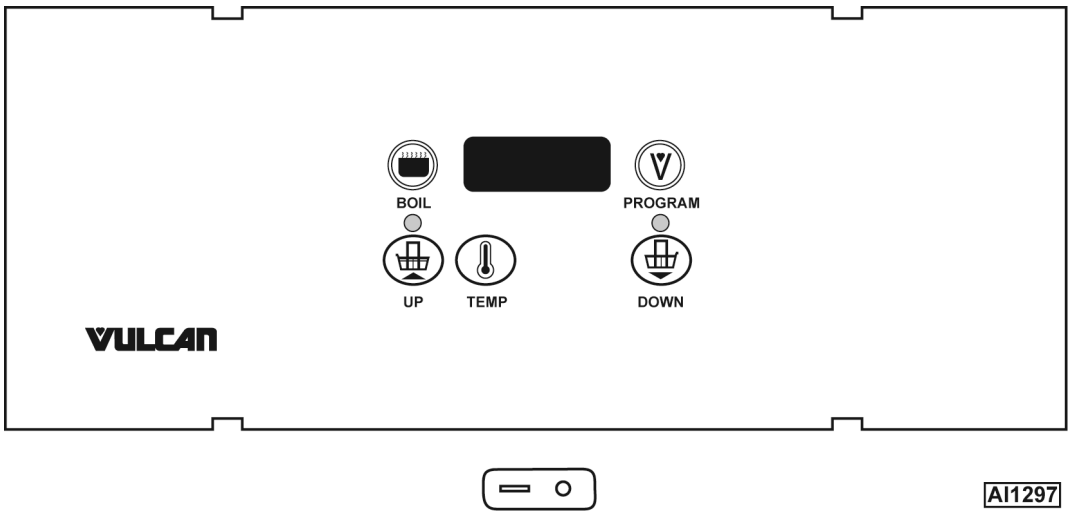

Fig. 3

SOLID STATE CONTROL (NEWER) D MODEL

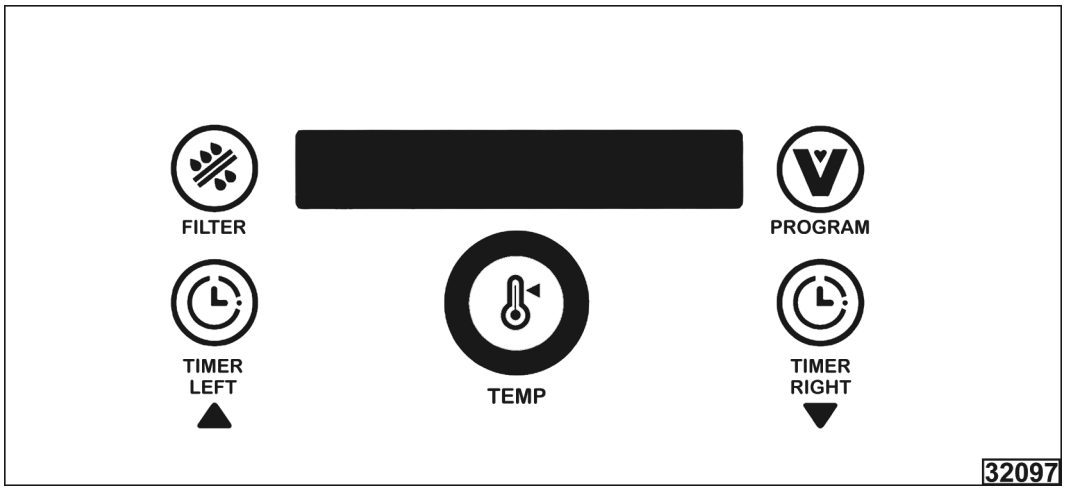

Fig. 4

Computer

- OLDER CONTROLS: Fifteen product/ programming keys allow individual product cooking times for up to ten different products: Product/Programming keys 1 through 0, Toggle, Boil, Oil Temp, Program (V), and two Timer (arrow) keys.
- NEWER CONTROLS: Fifteen product/ programming keys allow individual product cooking times for up to ten different products: Product/Programming keys 1 through 0, Toggle, Filter, Left and Right basket selection keys, Oil Temp, Program (V), and two Arrow keys.

- NEWER CONTROLS: Left and Right Basket selection keys that select which basket lift to use with the product/programming keys, and initiate the program cooking cycle (for units without basket lifts.
- Left and Right Arrows that initiate programming of time and checking stored values (left 1-5 and right 6-0).
- Left and Right displays that indicate actual or set point temperature, remaining times, operating mode, and completion of preheat period.
- Two LED lamps on the "OIL TEMP" key that indicate "heat on" and ten individual LED lamps above each of the ten product/programming keys: LED's blink when a product key is activated, and remain solid when using a key for programming.

COMPUTER CONTROL (OLDER) C MODEL

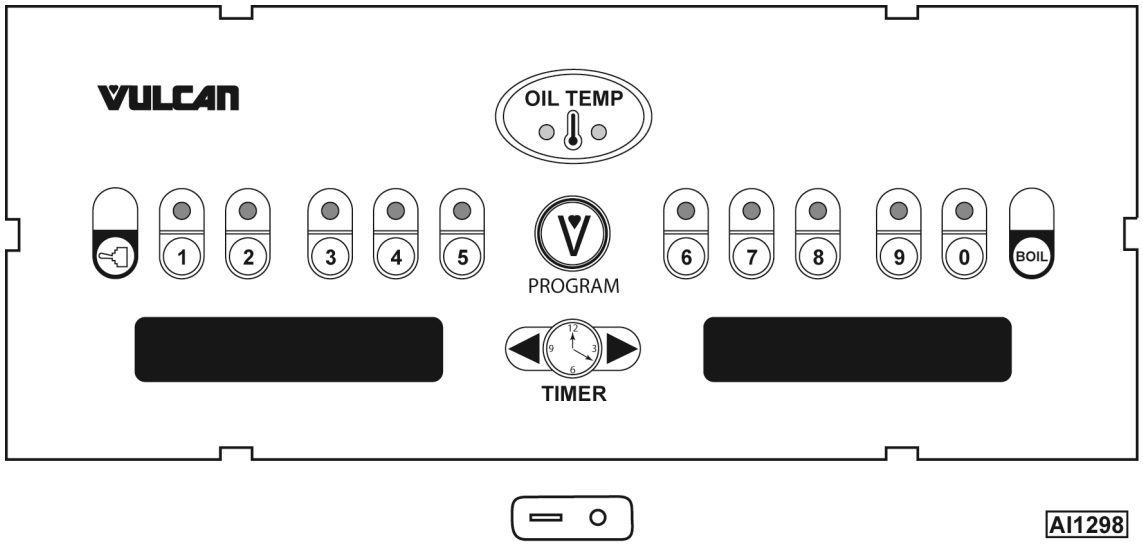

Fig. 5

COMPUTER CONTROL (NEWER) C MODEL

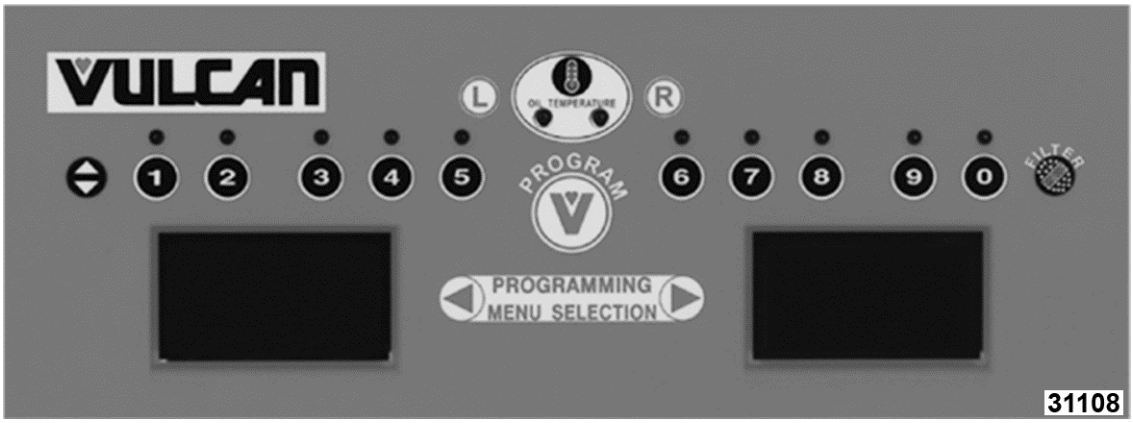

Fig. 6

REMOVAL AND REPLACEMENT PARTS

COVERS AND PANELS



⚠ WARNING

Disconnect the electrical power to the machine and follow lockout / tagout procedures. There may be multiple circuits. Be sure all circuits are disconnected.

Control Panel

1. Remove screws at top of control panel, and rotate panel downward.

SOLID STATE "D" MODEL SHOWN



Fig. 7

2. Disconnect wiring harness, then lift off panel.

NOTE: The cooking control, control box, interface board, and wiring harness are now accessible.

3. Reverse procedure to install.

Basket Lift Covers



⚠ WARNING

Shut off the gas before servicing the unit and follow lockout / tagout procedures.

⚠ WARNING

All gas joints disturbed during servicing must be checked for leaks. Check with a soap and water solution (bubbles). Do not use an open flame.

1. Disconnect gas line at fryer.
2. Move fryer out from wall to access basket lift covers.
3. Remove basket assembly lift arms from support rods.
4. Remove screws securing upper cover to flue wrap.

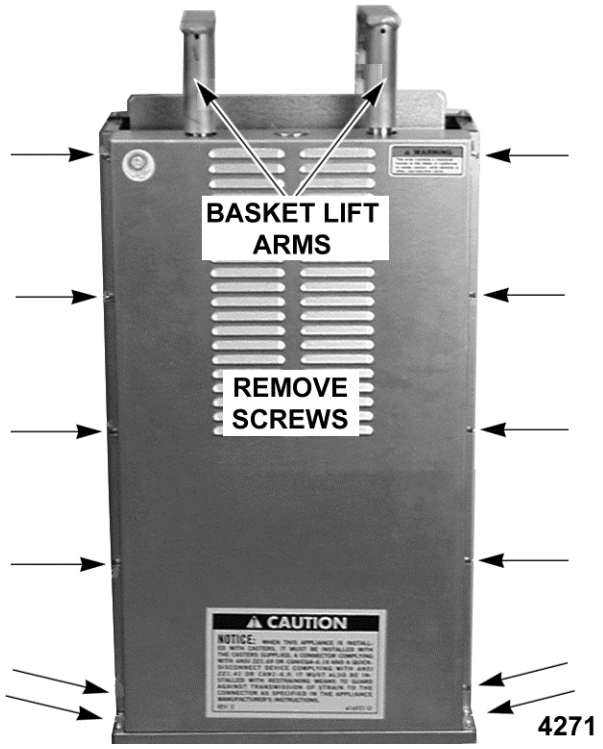

Fig. 8

   A. Lift upper cover over support rods and place cover to the side.

5. Remove screws securing lower cover to motor mounting base.



Fig. 9

6. Reverse procedure to install.

COOKING CONTROLS



⚠ WARNING

Disconnect the electrical power to the machine and follow lockout / tagout procedures. There may be multiple circuits. Be sure all circuits are disconnected.

NOTICE

Certain components in this system are subject to damage by electrostatic discharge (ESD) during field repairs. An ESD kit is required to prevent damage. The ESD kit must be used anytime the circuit board is handled.

1. Remove the control panel as outlined in Control Panel under COVERS AND PANELS.
2. To remove:
   A. Solid State Control: proceed to Step 3.
   B. Computer Control: Remove mounting nuts securing computer control and mounting panels to front control panel. Proceed to Step 4.

COMPUTER CONTROL "C" MODEL

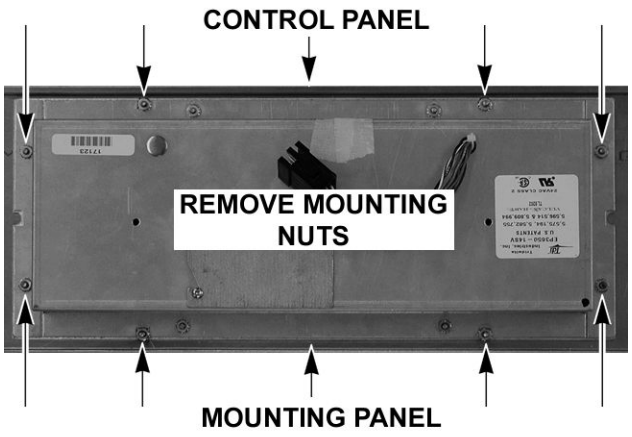

Fig. 10

3. Remove mounting nuts securing solid state control to mounting panel.

SOLID STATE CONTROL "D" MODEL

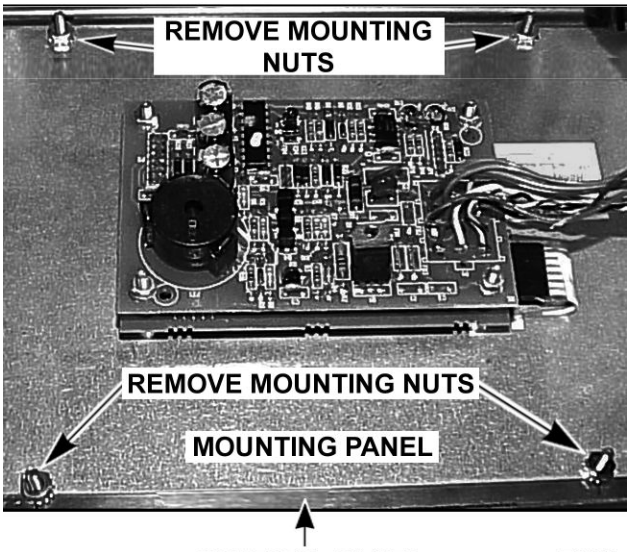

Fig. 11

4. Lift control (with mounting panel attached) off front control panel.
5. Reverse procedure to install, and check for proper operation.

NOTE: If a replacement control was installed, program the control with customers' settings and products.

FILTER VALVE AND DISCARD VALVE SWITCHES



⚠ WARNING

Disconnect the electrical power to the machine and follow lockout / tagout procedures. There may be multiple circuits. Be sure all circuits are disconnected.

1. Open the door to the fryer section being serviced.
2. Remove burners closest to the switch being serviced (if applicable) as outlined under GAS BURNERS.
3. Disconnect lead wire connector (2-pin) from the appropriate switch.
4. Remove switch mounting screws.

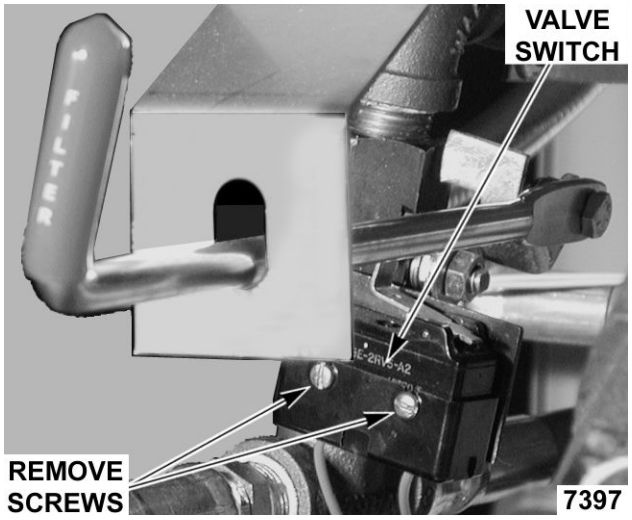

Fig. 12

5. Reverse procedure to install, and check for proper operation.

NOTE: Switches are not adjustable.

GAS BURNERS



⚠ WARNING

Disconnect the electrical power to the machine and follow lockout / tagout procedures. There may be multiple circuits. Be sure all circuits are disconnected.



⚠ WARNING

Shut off the gas before servicing the unit and follow lockout / tagout procedures.

1. Open door to fryer section being service.
2. Remove gas burner shipping ties (if installed).



Fig. 13

3. Lift up gas burner, and tilt top of burner toward fryer until it clears gas orifice at the bottom.

NOTE: The burners mount to the fryer's burner mounting bracket by shoulder bolts that rest in the keyway slot.

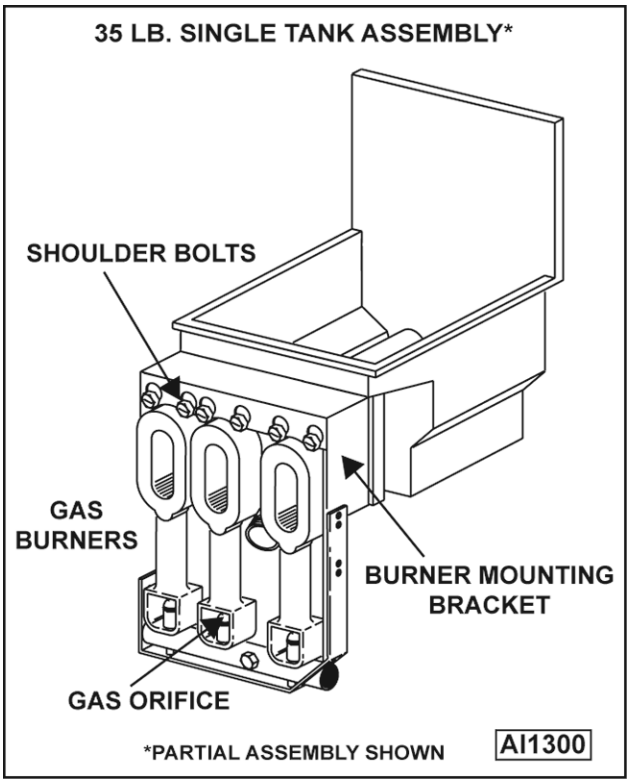

Fig. 14

4. Reverse procedure to install.

GAS ORIFICES



⚠ WARNING

Disconnect the electrical power to the machine and follow lockout / tagout procedures. There may be multiple circuits. Be sure all circuits are disconnected.



⚠ WARNING

Shut off the gas before servicing the unit and follow lockout / tagout procedures.

1. Remove gas orifice spud from orifice extension.

NOTE: The spud screws into orifice extension. When installing, to not overtighten the spud, or damage to the threads may occur.

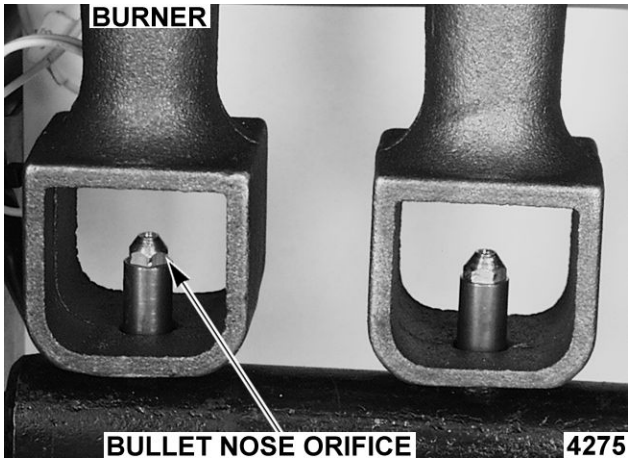

Fig. 15

2. Reverse procedure to install.

GAS COMBINATION VALVE



⚠ WARNING

Disconnect the electrical power to the machine and follow lockout / tagout procedures. There may be multiple circuits. Be sure all circuits are disconnected.



⚠ WARNING

Shut off the gas before servicing the unit and follow lockout / tagout procedures.

⚠ WARNING

All gas joints disturbed during servicing must be checked for leaks. Check with a soap and water solution (bubbles). Do not use an open flame.

NOTE: Gas combination valves are not serviceable, and should not be disassembled. Once the problem has been isolated to this control, replace it. Do not attempt to repair the assembly.

1. Remove burners as outlined in GAS BURNERS.
2. Disconnect lead wires from gas combination valve.
3. Remove cotter pin securing handle to gas valve ON/OFF knob. Pull handle (with knob bracket attached) away from valve assembly.
4. Disconnect pilot tube compression fitting.
5. Disconnect gas inlet compression fitting.
6. Separate the gas line union at gas outlet on the gas valve, then remove valve.

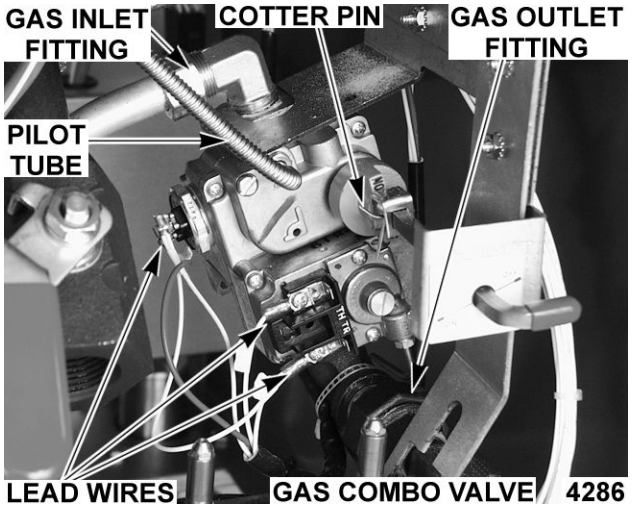

Fig. 16

NOTE: Remove fittings on gas valve and install (in same orientation) on the replacement valve.

7. Reverse procedure to install, and check for proper operation.

GAS PILOT



⚠ WARNING

Disconnect the electrical power to the machine and follow lockout / tagout procedures. There may be multiple circuits. Be sure all circuits are disconnected.



⚠ WARNING

Shut off the gas before servicing the unit and follow lockout / tagout procedures.

⚠ WARNING

All gas joints disturbed during servicing must be checked for leaks. Check with a soap and water solution (bubbles). Do not use an open flame.

1. Remove burners as outlined in GAS BURNERS.
2. Disconnect ignitor cable (at boot) from ignitor/ flame sense electrode on the gas pilot.
3. Disconnect ground wire from pilot bracket.
4. Disconnect pilot tube compression fitting.
5. Remove screws securing gas pilot to mounting bracket, and remove pilot.

Gas Pilot for Electronic Ignition Shown

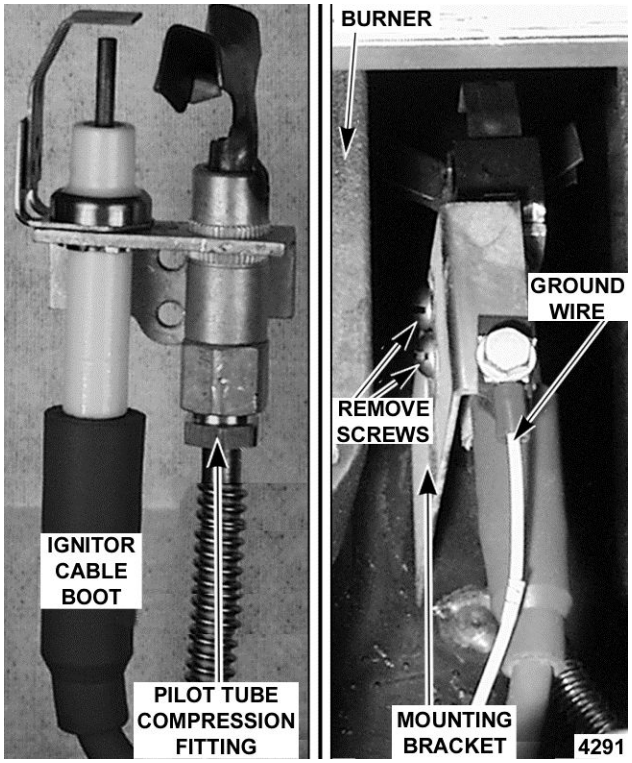

Fig. 17

A. To remove gas orifice from pilot for inspection or cleaning, disconnect the gas orifice fitting from pilot body.

NOTICE

If orifice is clogged with debris, clean with air or liquid only.

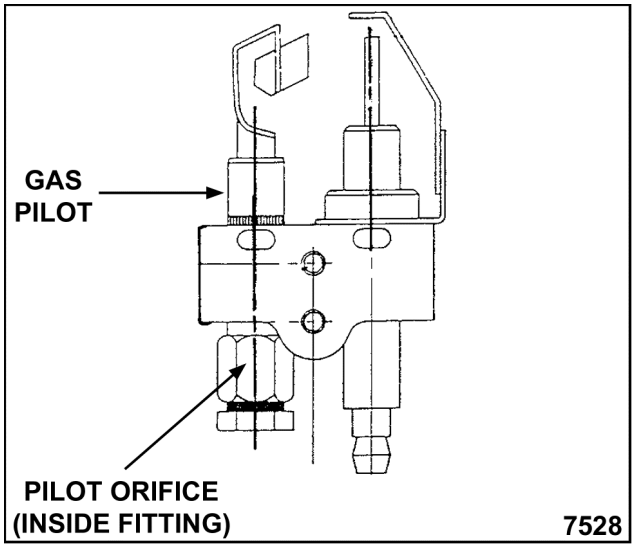

Fig. 18

6. Reverse procedure to install, and check for proper operation.

TEMPERATURE PROBE



⚠ WARNING

Disconnect the electrical power to the machine and follow lockout / tagout procedures. There may be multiple circuits. Be sure all circuits are disconnected.



⚠ WARNING

Shut off the gas before servicing the unit and follow lockout / tagout procedures.

NOTICE

Do not sharply bend and kink the temperature probe or damage may occur.

1. Drain frying oil from fryer tank.
2. Disconnect temperature probe and drain valve interlock (DVI) connector.

3GRD85F RIGHT SIDE FRYER SECTION SHOWN

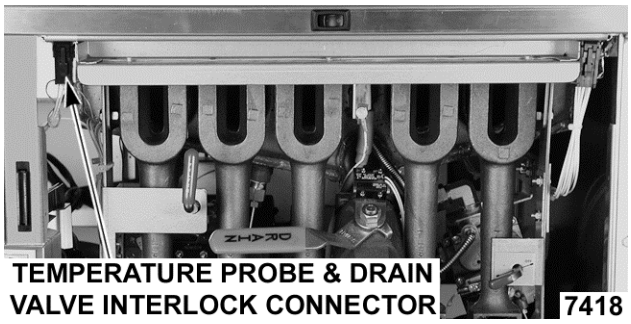

Fig. 19

NOTE: The connector has six pin positions, and is labeled "G" on the wiring diagram.

3. Remove the temperature probe lead wires from the 6-pin female connector.

PIN NO.	DESCRIPTION
G-1	Probe High (red)
G-2	Empty
G-3	Probe Low (white)
G-4	Empty
G-5	DVI Switch (24VAC) N.O. IN
G-6	DVI Switch (24VAC) OUT

4. Remove the burners as outlined in GAS BURNERS in order to access the probe retaining and packing nuts at the bottom of the tank.
5. Remove the probe retaining and packing nuts.

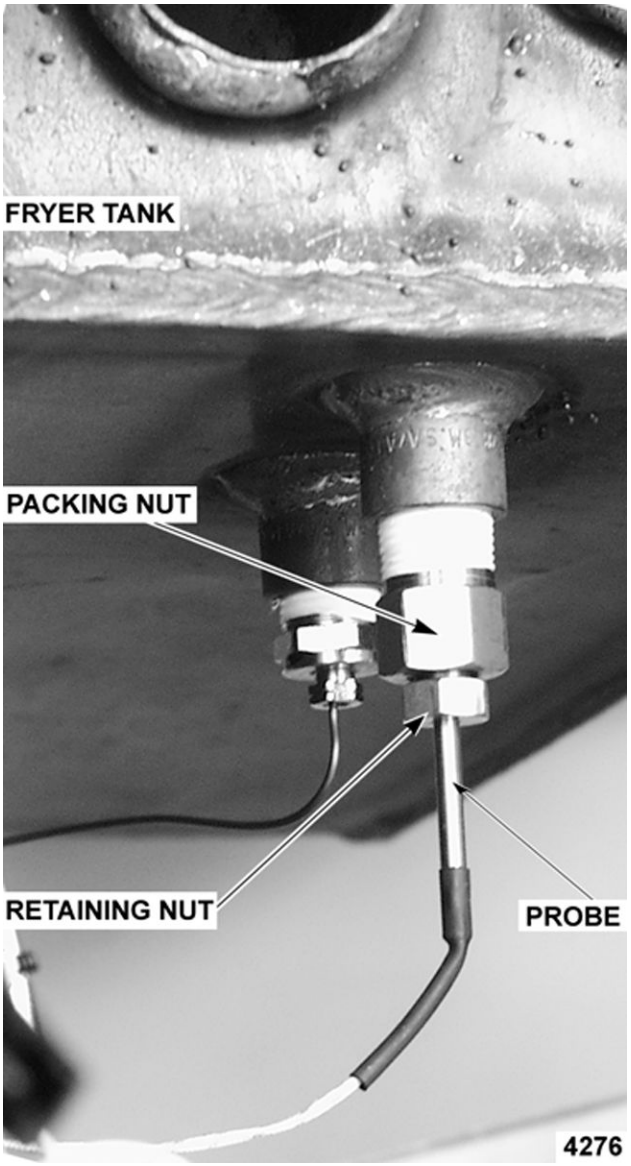

Fig. 20

6. Remove screws securing probe mounting clips and probe to fryer heat tube (inside tank), then remove probe.

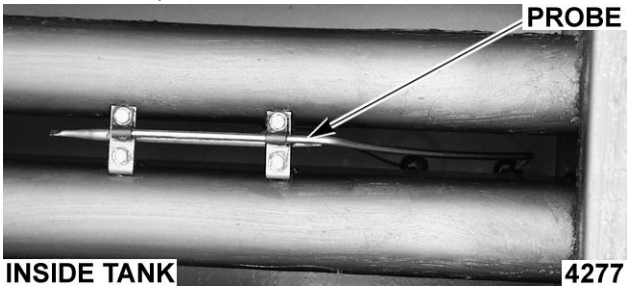

Fig. 21

7. Reverse procedure to install.
8. Check cooking controls calibration as outlined in COOKING CONTROL CALIBRATION.

HIGH LIMIT THERMOSTAT



⚠ WARNING

Disconnect the electrical power to the machine and follow lockout / tagout procedures. There may be multiple circuits. Be sure all circuits are disconnected.



⚠ WARNING

Shut off the gas before servicing the unit and follow lockout / tagout procedures.

NOTICE

Do not sharply bend and kink the temperature probe, or damage may occur.

1. Drain frying oil from fryer tank.
2. Remove burners as outlined in GAS BURNERS.
3. Disconnect lead wires from high limit thermostat.
4. Remove screws securing the high limit to mounting bracket.

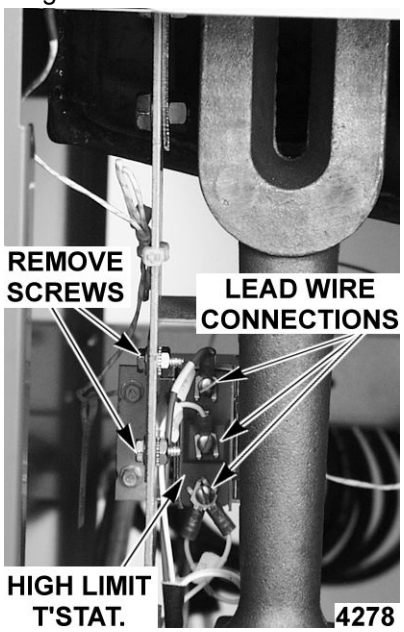

Fig. 22

5. Remove the capillary tube retaining and packing nuts from bottom of fry tank.

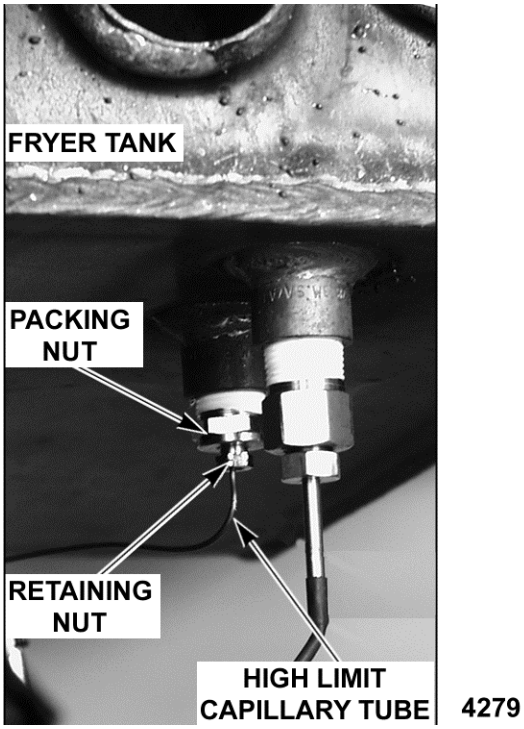

Fig. 23

6. Remove screws securing mounting clips and capillary tube to fryer heat tube (inside tank), then remove capillary tube.

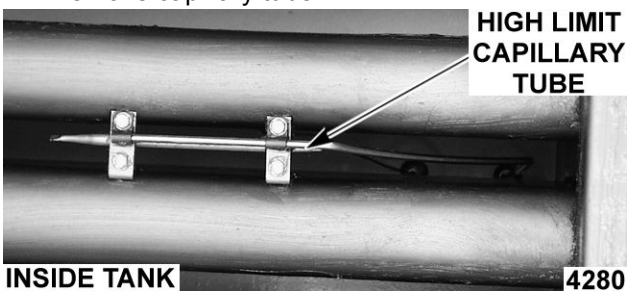

Fig. 24

7. Reverse procedure to install.

POWER SUPPLY BOX



⚠ WARNING

Disconnect the electrical power to the machine and follow lockout / tagout procedures. There may be multiple circuits. Be sure all circuits are disconnected.



⚠ WARNING

Shut off the gas before servicing the unit and follow lockout / tagout procedures.

⚠ WARNING

All gas joints disturbed during servicing must be checked for leaks. Check with a soap and water solution (bubbles). Do not use an open flame.

1. Disconnect gas line at rear of fryer.
2. Move fryer out from wall to access rear of fryer.
3. Open door to fryer section being serviced.
4. Disconnect ignitor cable (at boot) from ignitor/ flame sense electrode on gas pilot.
5. Disconnect ground wire from pilot bracket.
6. From rear of fryer:
   A. Disconnect wire harness connectors and power from power supply box.
   B. Remove mounting bolts securing power supply box to fryer. Access bolts from bottom of rear support channel frame.

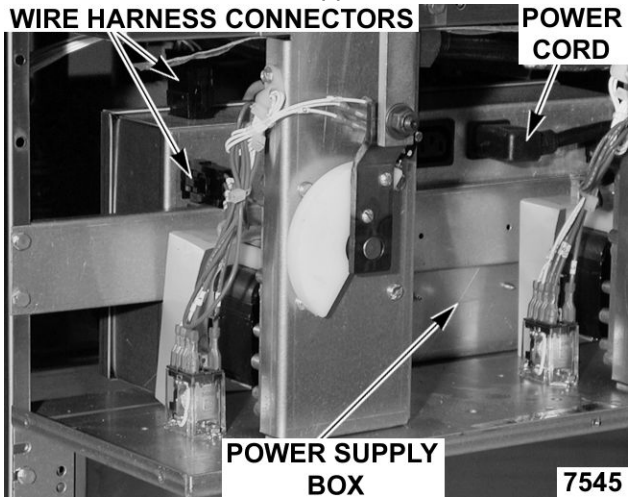

Fig. 25

7. Bring power supply box out from bottom of fryer.
8. To access components in power supply box, remove screws securing cover, and lift from box.

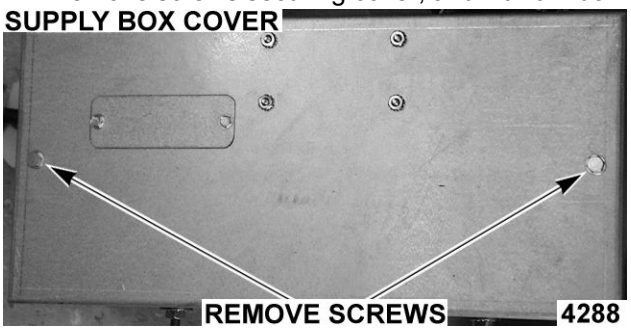

Fig. 26

9. Reverse procedure to install.

IGNITION CONTROL MODULE



⚠ WARNING

Disconnect the electrical power to the machine and follow lockout / tagout procedures. There may be multiple circuits. Be sure all circuits are disconnected.



⚠ WARNING

Shut off the gas before servicing the unit and follow lockout / tagout procedures.

1. Remove power supply box as outlined in POWER SUPPLY BOX.
2. Access ignition control module, and remove all lead wires and ignitor cable from module. Take note of individual wire positions.
3. Remove screws securing ignition module, and lift it out of power supply box.

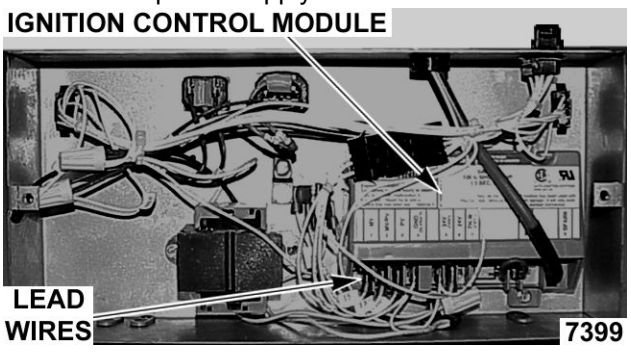

Fig. 27

4. Reverse procedure to install, and check for proper operation.

BASKET LIFT TUBE



⚠ WARNING

Disconnect the electrical power to the machine and follow lockout / tagout procedures. There may be multiple circuits. Be sure all circuits are disconnected.

1. Remove basket lift cover as outlined in Basket Lift Covers under COVERS AND PANELS.
2. Remove nut securing lift bar to lift tube.
3. Remove screws securing lift tube bracket to fryer, then remove bracket and lift tube.

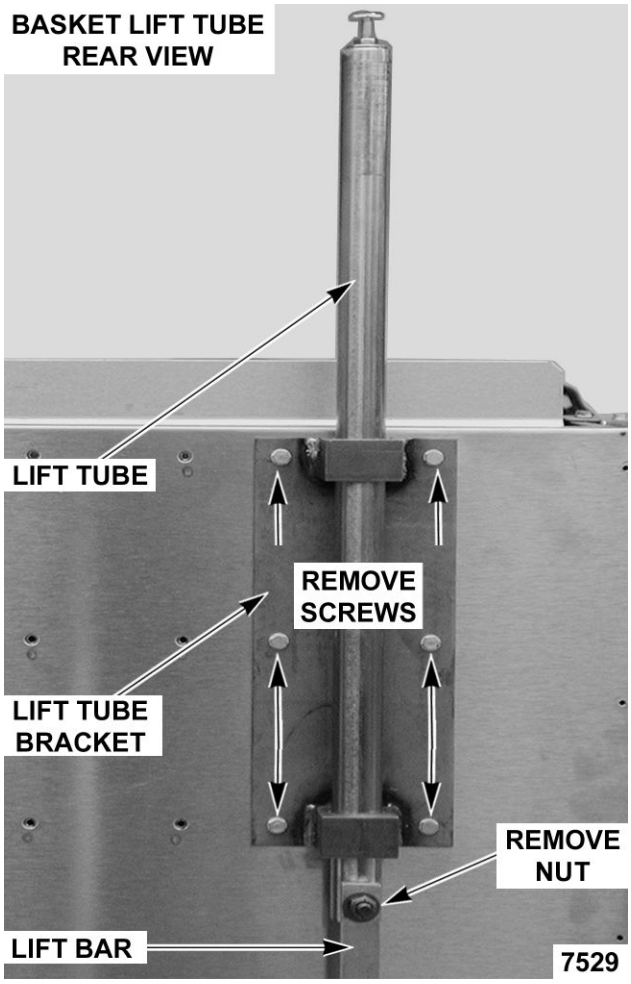

Fig. 28

4. Reverse procedure to install.

BASKET LIFT MOTOR



⚠ WARNING

Disconnect the electrical power to the machine and follow lockout / tagout procedures. There may be multiple circuits. Be sure all circuits are disconnected.

1. Remove basket lift covers as outlined in Basket Lift Covers under COVERS AND PANELS.
2. Remove basket lift tube as outlined under BASKET LIFT TUBE.
3. Disconnect lead wires from cam switch and basket lift motor.
4. Loosen set screws securing crank arm assembly to the basket lift motor shaft.

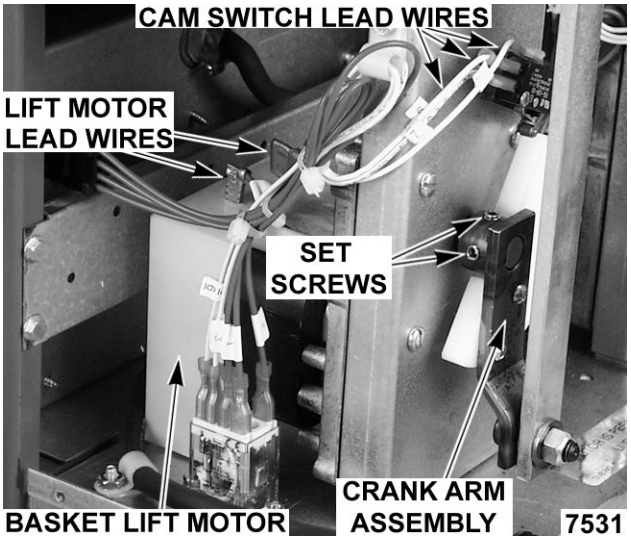

Fig. 29

5. Remove screws securing basket lift motor to cam bracket, then remove motor from bracket.

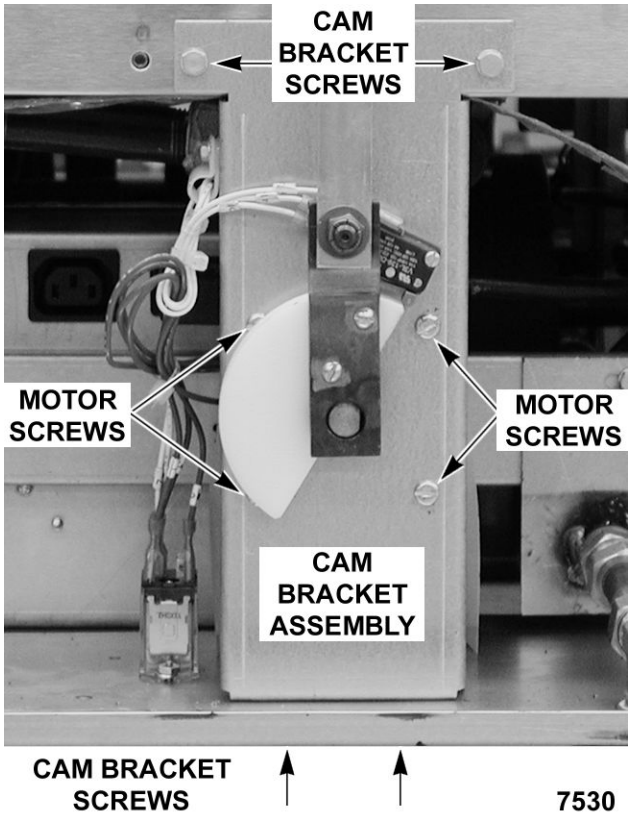

Fig. 30

6. Reverse procedure to install, and check for proper operation.

NOTE: After reinstalling motor, make sure all wire leads are clear of moving parts.

BASKET LIFT CAM SWITCH



⚠ WARNING

Disconnect the electrical power to the machine and follow lockout / tagout procedures. There may be multiple circuits. Be sure all circuits are disconnected.

1. Remove basket lift cover as outlined in Basket Lift Covers under COVERS AND PANELS.
2. Remove basket lift tube as outlined under BASKET LIFT TUBE.
3. Disconnect lead wires from cam switch.
4. Remove screws securing cam switch to cam bracket.

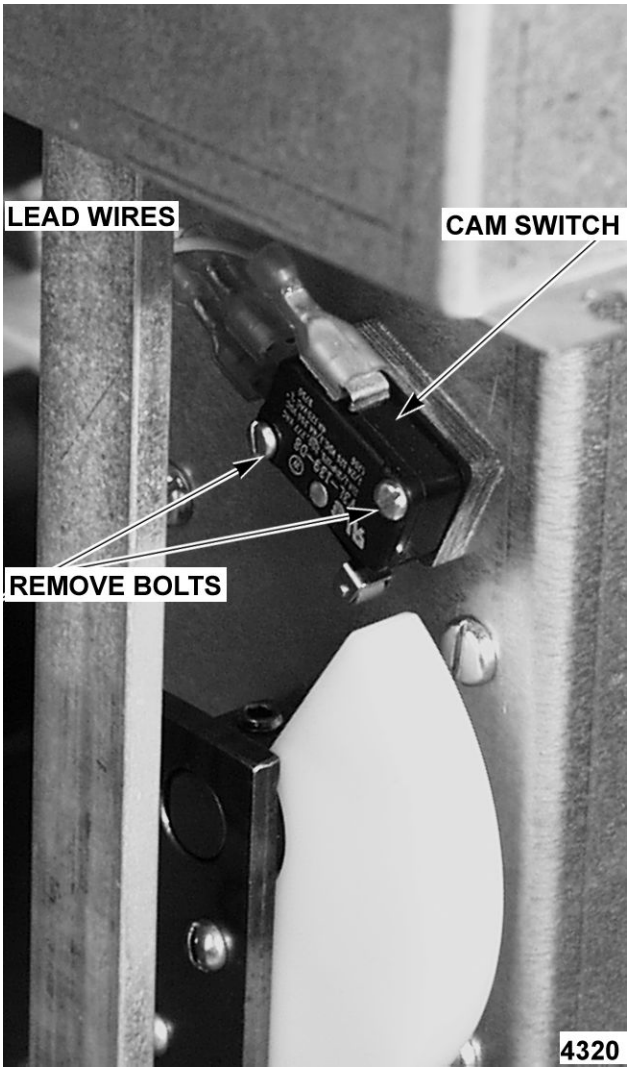

Fig. 31

5. Reverse procedure to install.

BASKET LIFT CAM



⚠ WARNING

Disconnect the electrical power to the machine and follow lockout / tagout procedures. There may be multiple circuits. Be sure all circuits are disconnected.

1. Remove basket lift covers as outlined in Basket Lift Covers under COVERS AND PANELS.
2. Remove nut securing lift bar to cam assembly.
3. Loosen cam set screw.
4. Remove screws securing cam to crank arm assembly.

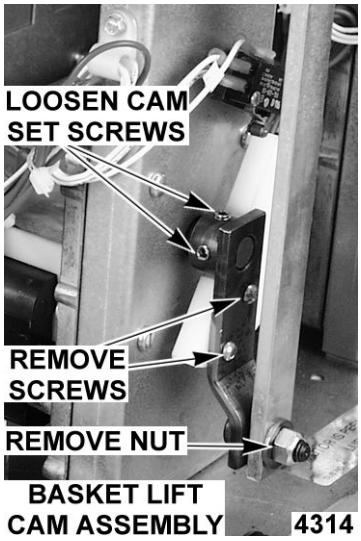

Fig. 32

5. Reverse procedure to install.

PUMP AND MOTOR



⚠ WARNING

Disconnect the electrical power to the machine and follow lockout / tagout procedures. There may be multiple circuits. Be sure all circuits are disconnected.

1. Open both fryer cabinet doors above the filter tank drawer.
2. Pull out filter drawer, remove filter tank assembly, and push tank support arms back underneath fryer.

NOTE: The remaining steps are written for front removal of pump assembly. If access to back of fryer is available, it may be easier to remove pump from the rear.

3. Remove burners from right side fryer section above filter tank drawer as outlined under GAS BURNERS.
4. Disconnect the electrical connection to motor.
5. Separate swivel hose connections at pump.

NOTE: When viewed from pump end, the right side is the intake port, and the left side is the discharge port.

6. Remove motor mounting bolts.
7. Remove motor and pump (pipe fittings attached) from fryer.
   A. If replacing pump and motor, remove existing pipe assemblies and reuse.
8. Reverse procedure to install.

NOTE: Ensure rubber vibration pad or grommets are installed under motor mounting plate.

FRY TANK ASSEMBLY



⚠ WARNING

Disconnect the electrical power to the machine and follow lockout / tagout procedures. There may be multiple circuits. Be sure all circuits are disconnected.



⚠ WARNING

Shut off the gas before servicing the unit and follow lockout / tagout procedures.

⚠ WARNING

All gas joints disturbed during servicing must be checked for leaks. Check with a soap and water solution (bubbles). Do not use an open flame.

1. Drain frying oil from fryer tank.
2. Disconnect gas supply line to allow access to fryer from all sides.
3. Remove fryer baskets, crumb screen, and basket hanger.

NOTE: If fryer is equipped with automatic basket lifts, remove "lift arms" from support rods before fry tank removal.

NOTE: If fryer is a battery section, remove grease strip, and split the silicone seal between fryer section tanks with utility knife.

4. Remove control panel as outlined in Control Panel under COVERS AND PANELS.
5. On battery fryer sections only, remove bolts securing drain pipe flange to manual drain valve.
6. Disconnect temperature probe and drain valve interlock switch (DVI) connector (6-pin) on the left.
7. Disconnect the following lead wire connectors: main control harness (right), gas combination valve, and power supply box.
8. Disconnect ignitor cable and ground wire from gas pilot assembly.

9. Remove gas manifold and frame assembly.
    A. For fryer section above filter drawer assembly on battery fryers or single floor model fryers, remove mounting nuts securing gas manifold and frame assembly to fryer's base frame.
    B. For all other fryer sections in a battery only, remove mounting nuts securing gas manifold and frame assembly to V-shaped frame support bracket.
10. Separate oil return line (hose or flexible tubing) fitting at the elbow.
11. Separate gas line compression fitting at top of gas combination valve (inlet).
12. Remove bolts securing gas line support bracket on left side of gas manifold and frame assembly. Allow gas line support bracket to swing out of the way, then replace bolts in frame. Hand-tighten only.
13. Remove screws securing the top of fry tank to flue wrap.
14. Grasp fry tank at top (by flue) and front lip, then lift fry tank assembly from fryer body. Place assembly on floor or table for removal of components.
15. Remove gas pilot assembly as outlined under GAS PILOT.
16. Remove temperature probe as outlined under TEMPERATURE PROBE.
17. Remove high limit thermostat as outlined under HIGH LIMIT THERMOSTAT.
18. Remove filter valve assembly and oil return line piping from fryer. If removing left side fryer tank above filter drawer assembly, disconnect oil line, and remove discard valve assembly from fryer.
19. Remove bolts securing gas manifold and frame assembly to fry tank.
20. Pull gas manifold assembly from fry tank.
21. Disconnect drain valve interlock switch (DVI) connector (2-pin), and remove manual drain valve.
22. Remove screws securing flue box to fry tank, then remove flue box.
23. Reverse procedure to install all parts removed from original fry tank onto replacement fry tank, then install assembly.

SERVICE PROCEDURES AND ADJUSTMENTS

TEMPERATURE PROBE TEST

The temperature probe is used for both the solid state control and the computer control. The probe is an RTD (resistance temperature detector) of the thermistor type. As temperature increases, resistance value decreases.

Probe Fault
If temperature probe fault or high temperature condition occurs, a fault message will be displayed, and the electronic alarm will sound continuously. Heat demand and basket lift outputs are deactivated. If a cooking cycle is in process (timer active), it will be canceled, and the keypad disabled.

This will continue until the fault clears, power is cycled, or problem is resolved.

Control Type	Display Message
SOLID STATE	An open will display "Prob," and a short or a high temperature condition will display "HI."
COMPUTER	An open will display "PROBE OPEN," and a short or a high temperature condition will display "PROBE SHORT."

To Check:

1. Disconnect temperature probe and drain valve interlock (DVI) connector.

3GRD85F RIGHT SIDE FRYER SECTION SHOWN

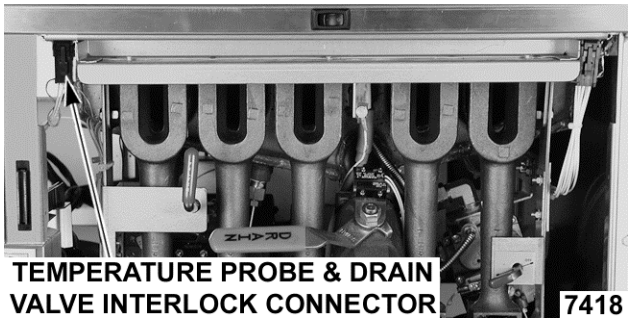

TEMPERATURE PROBE & DRAIN VALVE INTERLOCK CONNECTOR **7418**

Fig. 33

NOTE: The connector has six pin positions, and is labeled "G" on wiring diagram.

2. Test probe using a VOM to measure resistance. Place meter probe leads in pins 1 and 3.
   A. If measured resistance values are within the allowable range, probe is functioning properly. Reverse procedure to reinstall.
   B. If measured resistance values are outside the allowable range, install replacement probe, and check for proper operation.

Temperature (°F)	Resistance (Ω)
77	90,000 - 110,000
350	604 - 836
415 [1]	302 - 369
460 [2]	191 - 233

NOTE: **[1] High temperature alarm level for cooking controls.**

[2] Shorted probe equivalent temperature.

COOKING CONTROL CALIBRATION

1. Check level of frying oil in tank. Level must be between the MIN and MAX fill lines before proceeding.
2. Allow the oil to cool to below 300ºF.
3. Place a thermocouple in the geometric center of fry tank one inch below oil surface.
4. Set cooking control to 350ºF, and turn on fryer.
5. Allow frying oil temperature to stabilize (normally three cycles).

NOTE: Agitate frying oil to eliminate any cold zones.

6. Record temperature reading from meter when gas burners turn off, and when they turn on for at least two complete heating cycles.
7. Calculate average temperature by adding two temperature readings: when gas burners turn off and when gas burners turn on, and then divide this sum by two.

[Temp. (burners off) + Temp. (burners on)] / 2 = Average Temp.

Example: 360º + 340º = 700º; 700º / 2 = 350ºF

The average temperature should be 350ºF (±5ºF).

   A. If average temperature reading is within tolerance, cooking control is properly calibrated.
   B. If average temperature reading is out of tolerance, perform the following:

1) Solid State Control - Adjust offset temperature accordingly as outlined under SOLID STATE CONTROL - OLDER CONTROLS in Service Procedures and Adjustments section.

2) Computer Control - Adjust offset temperature accordingly as outlined under COMPUTER CONTROL - OLDER CONTROLS or COMPUTER CONTROL - NEWER CONTROLS in Service Procedures and Adjustments section.

C. Allow fryer to cycle twice, and calculate average temperature.

8. If the above adjustment cannot be obtained, check temperature probe as outlined under TEMPERATURE PROBE TEST.

ELECTRONIC IGNITION SYSTEM

Operation

When the main power switch is turned on, the ignition control module is energized with 24 volts between terminals 5 and 6.

An output of 24 volts is sent from terminals 2 and 3 to the pilot coil on the combination valve, allowing gas flow to pilot. Spark voltage is sent from terminal 9 to begin sparking at ignitor/flame sense electrode. The sparking will continue until an adequate pilot flame is sensed, or for a maximum of 90 seconds.

If pilot ignition is not established within the first several seconds of ignition trial time, the cooking control displays a message indicating "pilot out" or "ignition failure" as the ignition module continues to generate a spark at the ignitor/flame sense electrode.

If pilot is not established within the 90-second ignition trial time, the ignition module locks out power to the gas valve. A message is displayed by the control indicating "ignition lockout," keypad is disabled, and the electronic alarm will sound continuously.

The system remains locked out until the power switch is cycled to reset the system and restart the ignition trial cycle.

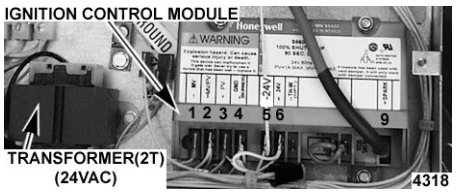

Fig. 34

Once the pilot flame is confirmed, a 24-volt output from terminal 1 will provide the ignition status input signal to the cooking control. When the cooking control calls for heat, the heat output is activated, and power is applied to the heat control Triac on the Control Interface Board. With the Triac powered, the main valve coil on the combination valve is then energized, allowing gas flow to the burners.

Terminal	Description
1	MV (main voltage) - 24VAC output will be present, provided the ignitor/flame sense electrode is sensing an adequate pilot flame.
2	MV/PV (common).
3	PV (pilot voltage) - 24VAC output will be present after the ignition module is powered. The voltage will remain present, provided an adequate pilot flame is sensed. If the pilot flame is not sensed within the ignition trial time, the ignition module locks out, which removes the output voltage.
4	Burner ground.
5	24VAC ground.
6	24VAC hot (input).
9	Spark voltage output to ignitor/flame sense electrode and for pilot flame current "rectification."

FLAME SENSE CURRENT CHECK

1. Turn off power switch.
2. Access ignition control module in power supply box.
3. Remove jumper wire between terminals marked with an asterisk (*) and an 8.

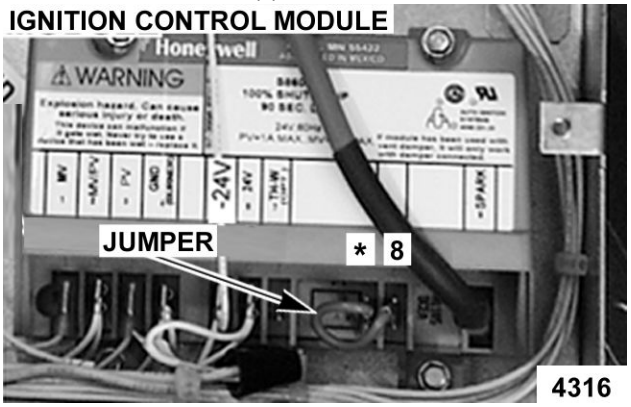

Fig. 35

4. Set VOM to micro amp scale (DC) and connect meter leads at the same terminals. Negative (-) meter lead to asterisk (*) terminal, and positive (+) meter lead to terminal 8.
5. Turn on power switch, and set cooking control to call for heat.
6. Meter reading should be above 1.0 micro amp (minimum) and steady.
    A. If reading is greater than or equal to the value stated in Step 6, then flame sense current is within tolerance.
        1) Turn off power switch, and replace jumper wire.
    B. If reading is less than the value stated in Step 6, turn of power switch and replace jumper wire.
        1) Perform ELECTRONIC IGNITION CONTROL TEST.

ELECTRONIC IGNITION CONTROL TEST

If ignition control module is not generating a spark to ignite gas pilot, perform the following checks.

1. Turn on power switch, and verify ignition control module is receiving power from transformer.
    A. If 24VAC is present between terminals 5 and 6 on ignition control module, then module is receiving power. Turn off power switch, and proceed to Step 2.
    B. If 24VAC is not present, then find the source of the problem.



⚠ WARNING

Disconnect the electrical power to the machine and follow lockout / tagout procedures. There may be multiple circuits. Be sure all circuits are disconnected.



⚠ WARNING

Shut off the gas before servicing the unit and follow lockout / tagout procedures.

⚠ WARNING

All gas joints disturbed during servicing must be checked for leaks. Check with a soap and water solution (bubbles). Do not use an open flame.

2. Verify all electrical connections on ignition control module are secure.
3. Verify ground wire connection on ignition control module and gas pilot mounting bracket are clean and secure. The gas pilot should have good metal-to-metal contact to pilot mounting bracket on fryer.
4. Remove gas pilot, and check the following:
    A. Inspect ceramic insulator on ignitor/flame sense electrode for cracks or evidence of exposure to extreme heat, which can allow leakage to ground. If either of these conditions exists, install a replacement gas pilot.
    B. Inspect ignitor electrode and ground clip for contaminates or corrosion. Clean those surfaces as necessary.
    C. The gap between ignitor/flame sense electrode and ground clip should be 1/8 inch. If gap is outside of this dimension, bend ground clip as necessary to make the adjustment.

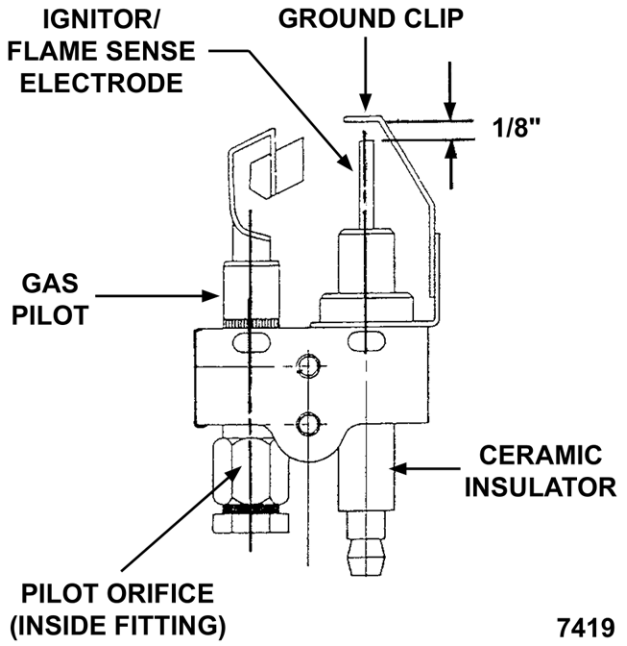

Fig. 36

D. Check ignitor cable connection for tightness and damaged insulation. If ignitor cable appears to be damaged, then install a replacement ignitor cable.

5. With gas pilot installed, and ignitor cable connected, reconnect power and turn on gas supply.

6. Turn on power switch, and observe spark from ignitor.

   A. If spark from ignitor is present and ignites gas for pilot, lighting burners, then the system is working properly.

   B. If gas pilot lights but does not maintain an adequate flame during the trial for ignition (90 seconds), check pilot orifice for clogging.

NOTICE

If orifice is clogged with debris, clean with air or liquid only.

   C. If spark from ignitor is present but does not ignite pilot gas before ignition control module locks out, there may not be enough gas in the line for ignition.

      Turn off power switch to reset the module. Wait 5 minutes between ignition tries for unburned gas to vent. Turn on power switch. Sparking should resume to ignite pilot. Module may need to be reset several times before ignition takes place.

   D. If ignitor is still not sparking, turn off power switch, disconnect power, and turn off gas supply.

7. Install a replacement ignition control module, and check for proper operation.

GAS MANIFOLD PRESSURE ADJUSTMENTS



⚠ WARNING

Disconnect the electrical power to the machine and follow lockout / tagout procedures. There may be multiple circuits. Be sure all circuits are disconnected.



⚠ WARNING

Shut off the gas before servicing the unit and follow lockout / tagout procedures.

1. Open doors and turn off gas combination valve.

2. To measure manifold pressure, remove the 1/8-inch NPT plug (pressure tap) on the outlet side of valve, and attach a manometer.

NOTE: Gas manifold pressure can also be measured at pressure tap in manifold. However, the fryer drain pipe may need to be removed for access.

3. Turn on gas supply, gas combination valve, and main power switch.

   A. Verify burners light.

4. Observe manometer pressure reading, and compare to pressure chart near the end of this procedure.

   A. If other appliances are connected to the same gas line, turn on all of them, and check manometer pressure reading again. If a pressure drop of ½" W.C. or more is observed, then gas supply needs to be checked by gas line installer, or the local gas company for adequate sizing.

   B. If adjustment is necessary, proceed to Step 5.

5. Remove adjustment screw cap to access pressure adjustment screw.

   A. To increase pressure, turn screw clockwise. To decrease pressure, turn screw counterclockwise.

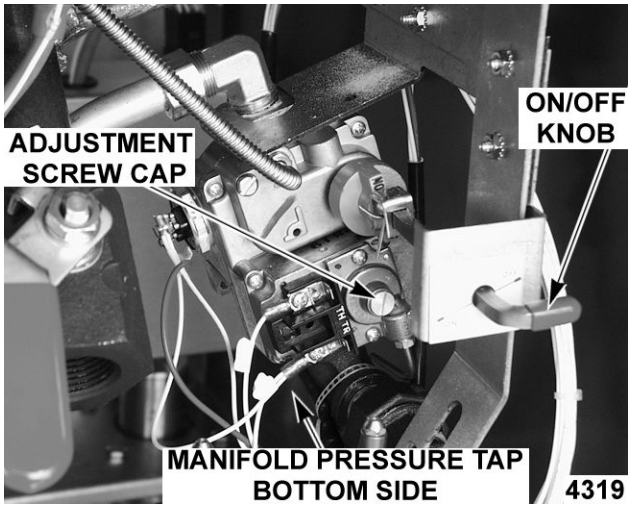

Fig. 37

NOTE: Accurate gas pressure adjustments can be made only with gas on and burner lit.

6. Set pressure as outlined below:

GAS TYPE	PRESSURE READINGS (INCHES W.C.)			
	MANIFOLD	LINE		
		RECOM-MENDED	MIN	MAX
Natural	4	7	5	14
Propane	10	11	11	14

NOTE: If incoming line pressure is less than minimum stated, then manifold pressure cannot be set correctly.

7. Once correct pressure has been set, turn off power switch, replace adjustment screw cap and 1/8-inch NPT plug (pressure tap) on outlet side of the valve.

8. Check for proper operation.

BASKET LIFT ARM ADJUSTMENT

1. With frying oil at room temperature, verify oil level is between MIN and MAX lines in fry tank. Add frying oil as needed.

NOTE: Frying oil will expand when heated. Do not fill fry tank past the MAX line.

2. Turn on power switch, and set temperature to 350ºF. Allow frying oil to reach set temperature.

3. Check basket lift operation.

   A. If necessary, adjust as outlined below.

4. When basket is in the up position, the bottom of the basket should be out of the oil. When basket is in the down position, the bottom of the basket should clear the crumb screen, and the product should be submerged.

   A. To adjust, remove basket arm from lift shaft, loosen stop nut and turn height adjustment bolt to raise or lower basket arm as required. Both baskets should be same height.

   B. Retighten stop nut when complete.

NOTE: If adjustment is too low when the basket is lowered, it will disengage from basket arm.



Fig. 38

SOLID STATE CONTROL - OLDER CONTROLS

Operation

Refer to the Installation & Operations manual for specific operating instructions.

Error Messages

For information on solid state control error messages, refer to SOLID STATE CONTROL under TROUBLESHOOTING.

Programming

The solid state control's programming mode is used to set the control's operational parameters.

NOTE: If a product key is active (timing), programming mode cannot be entered.

1. Press V key to enter Program Mode.

If the Parameter Lock feature is disabled, Program Mode entry is immediate. If the Parameter Lock feature is enabled "LoC" will be displayed.

Use the following key sequence (password) to enter Program Mode: Left basket/up; Left basket/up; Right basket/down; Right basket/down.

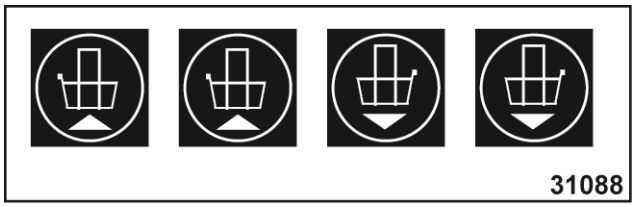

Fig. 39

NOTE: If the proper key sequence is not entered within 6 seconds, the controller exits Program Mode.

2. Beeper chirps on each successful key press. If a key is not pressed within 2 minutes, the control will automatically exit programming.
3. To scroll through each of the Program items, press V and release.
4. To exit Program Mode at any time, press V and hold for 1 second.

Program Item	Key Sequence	Display[4]
Left Timer	• Press Left Basket to increase, or Right Basket to decrease cook time.[1]	LED above left basket is on. **15:00** time value with flashing colon (MM:SS).
Right Timer	• Press Left Basket to increase, or Right Basket to decrease cook time.[1]	LED above right basket is on. **15:00** time value with flashing colon (MM:SS).
Set Point Temperature	• Press Left Basket to increase, or Right Basket to decrease set point temperature.[2]	**340F** or 171C Current set point with flashing F or C.
Calibration Offset	• Press Left Basket to increase, or Right Basket to decrease offset temperature (range -20 to +20).[2]	**00F** or -00F Always in °F.
Melt Options	• Press Left Basket or Right Basket to scroll through Melt Options.	CY **0** CY L = Liquid. CY S = Solid. CY 0 = No.
Parameter Lock	• Press Left Basket or Right Basket to select desired Parameter Lock condition.[3]	LoC parameter lock enabled or flashing. Uloc parameter lock disabled.
Degrees F or C	• Press Left Basket or Right Basket to select desired Temperature scale.	F or C
NOTES:	**[1] Time will change in 1-second increments, accelerating if the button is held.** **[2] Temperature will change in 1-degree increments, accelerating if the button is held.** **[3] Selecting Parameter Lock enabled will take effect on the next Program Mode entry.** **[4] Default value shown in bold.**	

SOLID STATE CONTROL - NEWER CONTROLS

Operation
Refer to the Installation & Operations manual for specific operating instructions.

Error Messages
For information on solid state control error messages, refer to SOLID STATE CONTROL under TROUBLESHOOTING.

Programming
The solid state control's programming mode is used to set the control's operational parameters.

NOTE: If a product key is active (timing), programming mode cannot be entered.

1. Press V key to enter Program Mode.

NOTE: Key must be pressed during power-up, when the display shows the revision level. **VULCAN** will be displayed when Program Mode is entered.

NOTE: Beeper chirps on each successful key press. If a key is not pressed within 2 minutes, the control will automatically exit Program Mode.

2. Scroll through the Program items by pressing and releasing V key.
3. Exit Program Mode at any time by pressing and holding V key for 1 second. **MELT L** will be displayed when Program Mode is exited.

NOTE: Do not change any settings beyond those listed in this chart.

Program Item	Key Sequence	Display [1]
Brand	Press TIMER RIGHT to change brand. Press V key to select and move to next item.	**VULCAN**, HOBART
Degrees Type	Press TIMER RIGHT to change unit of measurement type. Press V key to select and move to next item.	**DEG F**, DEG C
Tank Cleaning Mode	Press TIMER RIGHT to change tank cleaning mode. FILTER is for fryer with filtration system. BOIL is for fryer without built-in filtration system. Press V key to select and move to next item.	**FILTER**, BOIL
Heat Type	Press TIMER RIGHT to change heat type. GAS is for GR fryer. GAS* is for VK high-efficiency fryer. ELECTRIC is for ER fryer. Press V key to select and move to next item.	**ELECTRIC**, GAS, GAS*
Degrees Offset	Press TIMER LEFT to scroll through degrees plus, up to +14. [2] Press TIMER RIGHT to scroll through degrees minus, down to -12. [2] Press V key to select and move to end of program item selection.	**00F**

[1] Default shown in bold.

[2] Temperature will change in 1-degree increments, accelerating if key is held.

COMPUTER CONTROL - OLDER CONTROLS

Operation
Refer to the Installation & Operation Manual for specific operating instructions.

Service Programming
The computer control's "service programming" mode is used to perform system diagnostic tests or edit "program items" that affect the fryer's operation.

NOTE: If a product key is active (timing), service programming cannot be entered.

Error Messages
For information on computer control error messages, refer to "COMPUTER CONTROL" under "TROUBLESHOOTING."

Enter Service Mode

1. Press "V" key, and enter password (default: **1972**). Use product keys (1-9, 0) to enter values.
   A. SERVICE is displayed in left window, and LED's above product keys 1, 2, 4, 5, 6, 7, and 8 come on.
   B. Beeper will chirp on each successful key press. If a key is not pressed within 2 minutes, the computer will automatically exit service programming (except in diagnostic or more service programming).
2. To exit a PROGRAM ITEM after making a selection, press "V" to accept and return to service programming.
3. To exit SERVICE PROGRAMMING and return to operation mode, press "V" key twice.

Program Item	Key Sequence	LED Status		Display [5]	
		On	Off	Left	Right
Temperature Offset	Press "1" and enter offset temperature.		All	OFF 00 F	DEGREES
	Press "V" to accept selection.				
	Press "TOGGLE" to display direction of offset (positive or negative).			POSITIVE OR NEGATIVE	DEGREES
Melt Cycle On/ Off Times	Press "2" and set melt cycle ON time.		All	MLTON:08	MELT ON
	Press LEFT or RIGHT "TIMER" key arrow and set melt OFF time.			MLTOFF:26	MELT OFF
Diagnostic Mode	Press "5" to enter diagnostic mode (outputs for heat, basket lifts, and cooking timers turned off).	5, 7		DIAGNOST	DIAGNOST
	Press "1" to toggle left basket lift output. Left basket lift lowers. LED toggles on/off.	5, 7		L BASKET	L BASKET
	Press "2" to toggle right basket lift output. Right basket lift lowers. LED toggles on/off.	5, 7		R BASKET	R BASKET
	Press and hold "3" to temporarily activate heat demand (heat on). Release to deactivate heat demand (heat off). LED toggles on/off. [1]	5, 7		HEAT DEM	HEAT DEM
	Press "5" to test drain valve interlock.	5, 7			
	• If drain valve closed.	5, 7		DRN ON	DRN ON
	• If drain valve open.	7	5	DRN OFF	DRN OFF
	Press and hold "6" to light all display elements.	All		*.*.*.*.*.*.*	*.*.*.*.*.*.*
	Press "7" to test ignition status input. [2]	5, 7			
	• If gas valve on.	5, 7		PILOT ON	PILOT ON
	• If gas valve off or ignition module lockout.	5	7	PILOT OF	PILOT OF
Temperature Ready Level	Press "6" to view the cooking cycle lockout temperature (always ºF). To edit, enter the two-digit number desired. [3]		All	READY40F	
More Service Programming Level	Press "8" to enter More Service Programming. To edit one of the selection, enter the two-digit number desired. To exit a selection, press "V" to accept and return to More Service Programming.	4, 5, 6		MORE	SERVICE
	Press "4" to view or edit the Shake Alarm duration: 0-98 seconds; 99-continuous alarm until canceled manually.			DT-DUR13	DURATION

Program Item	Key Sequence	LED Status		Display [5]	
		On	Off	Left	Right
	Press "5" to view or edit the Hold Alarm duration: 0-98 seconds; 99-continuous alarm until canceled manually.			HD-DUR.·05	DURATION
	Press "6" to view or edit the Cooking cycle cancel delay: 0-10 seconds. [4]			CANCEL.·01	DELAY
NOTES:	**[1] Oil temp LED's cycle on/off with heat.** **[2] If gas valve is turned to ON, PILOT ON is displayed to indicate gas valve position is on, and computer is receiving input status signal from valve. If gas valve is turned to OFF, PILOT OFF is displayed, and gas ignition sequence starts. If pilot does not light within ignition trial time, PILOT OFF is displayed, and ignition module locks out. Service programming can still continue, but upon exit, PILOT OUT is displayed. Turn off power to reset.** **[3] If the cooking temperature is below set point by this number, a cooking cycle cannot be started.** **[4] The number of seconds to hold a product key during a cooking cycle in order to cancel the cycle.** **[5] Default values are shown.**				

Display, LED, and Keypad Test

1. Initiate test by pressing and holding "5" while turning on power. Release key during display of software version level.
2. For each number key (1-9, 0) pressed, the corresponding value is displayed in each character position in the left and right displays. (Example: pressing "5" key will display "55555555" "55555555.")

NOTE: Beeper will chirp for as long as the key is held.

3. For each function key pressed, the following values are displayed in each character position on the left and right displays.

   PROGRAM (V): "V"

   TEMPERATURE: "T"

   TOGGLE: "L"

   BOIL: "B"

   LEFT TIME: "<"

   RIGHT TIME: ">"

4. Turn off power to exit test.

COMPUTER CONTROL - NEWER CONTROLS

Operation

For operating instructions and programming, refer to OPERATOR MANUAL and computer controls programing start guide.

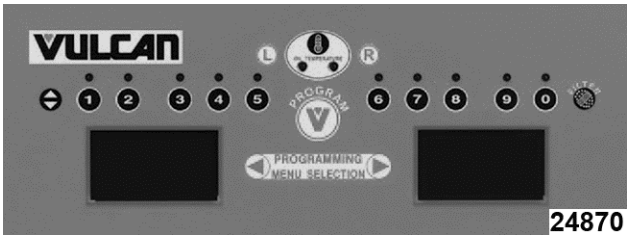

Fig. 40

Service Programming

The computer controls service settings mode is used to select the settings that affect fryer operation and to perform fryer diagnostic tests.

Enter Service Setting Mode

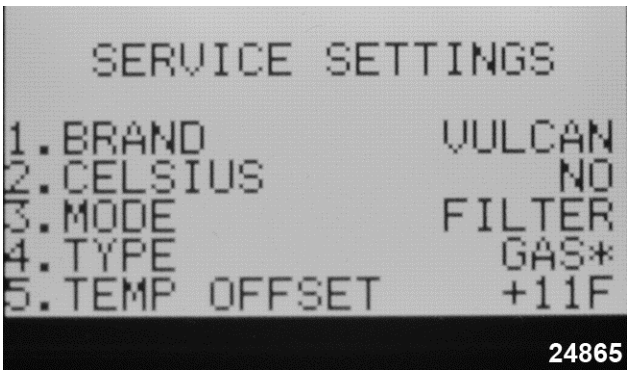



Fig. 42

NOTE: The controls heat demand output signal is off and the heat/ignition status input signal is ignored if the fryer is in cook mode or idling.

1. Turn power switch on and when the program revision is displayed, press PROGRAM to enter Service Setting Mode.
   A. The SERVICE SETTINGS are shown on the left and right display screens.
2. Verify the settings shown on the display screen are correct for the fryer being serviced.
3. To change a service setting.
   A. Press the desired product number key (1 thru 6) on the control panel that corresponds to the service setting number on the display screen.
      1) Beeper chirps on each successful key press and all LED's are off. When a service item is selected, only the keys required to change the setting are active.
   B. Press toggle key to alternate between available selections, or use product number keys where indicated to enter a value. The current selection will be "blinking".
   C. Press PROGRAM key to save the selection - "Blinking" stops.
   D. Access the other service settings as necessary.
4. To enter DIAGNOSTICS mode, press product number key 7 on the control panel.

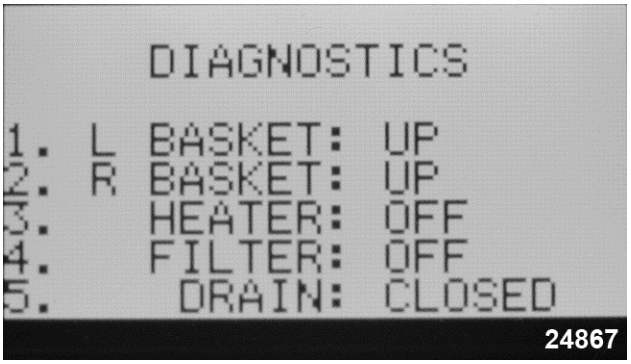

Fig. 43



Fig. 44

   A. Press the desired product number key (1, 2, 3, 4, & 6) on the control panel that corresponds to the diagnostic test number on the display screen to check the output signal to the component.
      1) Press the same product number key again to turn the output off.

NOTE: Item 5 (drain) displays the real time status and does not require pressing the corresponding product number key. Item 3 (heater) - The output signal will be active for 3 seconds (heat on) then turn off.

   B. For item 6 DISPLAY: - change the setting as desired.
      1) Press product number key 6 to access the display screen adjustment settings.
      2) Press the left or right arrow key on the PROGRAMMING MENU SELECTION screen to select the screen to adjust. Display shows "THIS LCD SELECTED".



Fig. 45

3) To adjust the selected screen:

   a. BACKLIGHT - Press toggle key to turn display backlight ON or OFF.

   b. PIXEL MODE - Press product key number 1 two times to change display from white background with black letters to black background with white letters. Press the key again to change it back to original setting.

   c. CONTRAST - Press the L key on the keypad to lower the contrast or press the R key on the keypad to raise the contrast.

4) Press PROGRAM key to return to DIAGNOSTICS MODE.

5. To exit SERVICE SETTINGS MODE and return to normal operation, keypress PROGRAM key.

   A. Display reverts to product menu items.

SERVICE SETTINGS	KEY SEQUENCE	DISPLAY ITEM FLASHES [1]	DESCRIPTION
1. Brand	Press 1 to change brand name. Press toggle key to select HOBART or VULCAN. Press PROGRAM Key to save the selection.	**VULCAN**	Brand name at power on.
2. Celsius	Press 2 to change temperature scale. Press toggle key to select NO or YES. Press PROGRAM Key to save the selection.	**NO**	Temperature °F/°C No = Fahrenheit Yes = Celsius
3. Mode	Press 3 to change fryer mode. Press toggle key to select BOIL or FILTER. Press PROGRAM Key to save the selection.	**Boil**	Boil or Filter Boil key = Standalone fryer Filter key = Filter system battery
4. Type	Press 4 to change energy source. Press toggle key to select ELECTRIC, GAS or GAS*. **NOTE:** VK and TR Gas Fryers MUST be set to GAS*. Press PROGRAM Key to save the selection.	**ELECTRIC**	Electric or Gas

SERVICE SETTINGS	KEY SEQUENCE	DISPLAY ITEM FLASHES [1]	DESCRIPTION
5. Temp Offset	Press 5 to change offset temperature. Press toggle key to change offset value to (+) or (-) (positive or negative). Enter the offset value using the number keys on the keypad. **NOTE:** Offsets the actual oil temp sensed by the temperature probe during calibration. Enter a positive number to decrease the actual oil temperature; or a negative number to increase the oil temperature. Press PROGRAM Key to save the selection.	OFF **00** F (always in °F)	Degrees Fahrenheit and positive zero are the defaults.
6. Baskets	Press 6 to change the number of basket lifts. Press toggle key to select 0, 1, or 2. Press PROGRAM Key to save the selection.	**2**	Display shows 0, 1 or 2.
7. Diagnostics	Press 7 to enter diagnostic mode (outputs for heat, basket lifts and cooking timers remain off).	——	DIAGNOSTICS (Shown on display screen.)
1.) L Basket	Press 1 to toggle left basket lift output to lower the lift.	DOWN	Lowers basket.
	Press 1 again to raise the lift.	**UP**	Raises basket.
2.) R Basket	Press 2 to toggle right basket lift output to lower the lift.	DOWN	Lowers basket.
	Press 2 again to raise the lift.	**UP**	Raises basket.
3.) Heater	Press 3 to turn heat output ON for 3 seconds only. OIL TEMPERATURE LED's light with heat demand.	On then **OFF**	Gas burner or heating elements turn on then off.
4.) Filter	Press 4 to turn filter output ON.	ON	Pump motor on.
	NOTE: Filtering system fryer batteries only.		
	Press 4 again to turn output OFF.	**OFF**	Pump motor off.
5.) Drain	Display indicates the position of the drain valve. (DVI switch input to control.) (Keypress not required.) Manually change valve position to test, and display will update.	**CLOSED**	
	Drain valve open.	OPEN	
	Drain valve closed.	**CLOSED**	

SERVICE SETTINGS	KEY SEQUENCE	DISPLAY ITEM FLASHES [1]	DESCRIPTION
6.) Display	Press 6 to adjust the left and right display screen settings. Refer to LCD display screen picture under ENTER SERVICE SETTINGS MODE. Press the left or right arrow key on control panel to select the screen to adjust. To adjust the selected screen: • BACKLIGHT - Press toggle key to turn display backlight ON or OFF. • PIXEL MODE - Press product key number 1 two times to change display from white background with black letters to black background with white letters. Press the key again to change it back to original setting. • CONTRAST - Press the L key on the keypad to lower the contrast or press the R key on the keypad to raise the contrast.	N/A	THIS LCD SELECTED
Exit Diagnostic and Service Mode	Press PROGRAM Key to exit the selected DIAGNOSTICS test and return to Service Settings Mode.	N/A	SERVICE SETTINGS (Shown on display screen.)
NOTES:	**[1] Default values shown in bold.**		

Alarm Messages

The alarms take precedence over any other controller mode or function (outputs off, active timers canceled).

ALARMS	DESCRIPTION
PROBE FAULT	If a temperature probe fault occurs, the alarm sounds continuously and the display shows PROBE on the left display and either OPEN or SHORT on the right display. This alarm state will remain until the fault clears or power switch is cycled. • OPEN - Probe detects temperature less than 40°F. • SHORTED - Probe detects temperature greater than 460°F.
IGNITION STATUS GAS -Selected under service settings - Type.	If the ignition status input is not present, both displays show IGNITION LOCKOUT. If the input comes back in less than 8 seconds, the displays will revert to normal operation. If the input remains inactive for more than 90 seconds, IGNITION LOCKOUT will be shown on the left display and CHECK GAS SUPPLY will be shown right display, and the alarm will sound continuously. This alarm state will remain until power switch is cycled.
IGNITION STATUS GAS Selected incorrectly under service settings - Type.	After 20 seconds in normal operation mode, IGNITION LOCKOUT will be shown on the left display and CHECK GAS SUPPLY will be shown right display, and the alarm will sound continuously. Enter SERVICE SETTINGS and select GAS* as the type.

ELECTRICAL OPERATION

COMPONENT FUNCTION

Solid State or Computer Cooking Controls ("D" or "C" Models)	Monitors and evaluates input signals to the control. Controls the cooking cycle: Activates the heat output signal to maintain frying oil temperature, counts product cook time(s), signals the electronic alarm at the end of a cooking cycle, and activates the left and right lift output signal to operate the basket lift(s). **NOTE:** By utilizing the same wiring harness connections, the two control types are interchangeable between fryers.
Control Interface Board	Provides the output signal interface from the cooking control to regulate gas heating and basket lift operation. The board components consist of a heat control Triac and two single pole N.O. relays.
Transformer	Supplies 24VAC to the cooking control. If equipped with electronic ignition, also supplies power to ignition control module. Transformer is energized when power switch is turned on.
Power Switch	Supplies power to control circuit.
Gas Combination Valve	Allows gas flow to pilot when pilot valve coil is energized, and allows gas flow to burners when main valve solenoid is energized. Also, regulates gas manifold pressure.
High Limit Thermostat	Prevents frying oil from reaching temperatures over 450ºF (auto reset at 415ºF). Serves as a backup to the cooking control's high temperature alarm setting of 415ºF (normal operation resumes when temperature falls below this point).
Temperature Probe . . .	Senses temperature of frying oil. Converts temperature into a resistance valve, which is monitored by the cooking control. The probe is an RTD (resistance temperature detector) of the thermistor type. As temperature increases, the resistance value decreases.
Ignition Control Module	Controls and monitors gas pilot ignition. Energizes pilot valve coil on the combination control valve, and generates spark for pilot ignition. Monitors the presence of a flame, and supplies an ignition status input signal to the cooking control. Electronic ignition models only.
Ignitor/Flame Sense	Ignites gas pilot and senses the presence of a flame. The flame presence generates a micro-amp flame sense current that is rectified to the ignition control module. The spark ignitor/flame sense is a component for the gas pilot with electronic ignition only.
Drain Valve Interlock Switch (DVI)	A magnetic reed switch mounted on the manual drain valve that supplies a drain valve position signal (open/closed) to the cooking control. When drain valve is open, the drain interlock input to the control is removed. This prevents the gas burners from coming on with the fry tank empty.
Filter Power Switch . . .	Supplies 120VAC to pump motor. Filter valve switch or discard valve switch must be closed (valve handle extended).
Pump Motor	Operates pump to circulate frying oil through filtering system.
Filter Valve Switch	Energizes pump motor to filter the frying oil when switch is closed (valve handle extended). Filter power switch must be turned on. When oil filtering is complete, close the manual drain valve to the fryer and allow the fry tank to refill. Return the switch to the N.O. position (valve handle retracted) when all filtered oil is returned to fry tank.
Discard Valve Switch	Energizes pump motor to discard the frying oil from filter tank when switch is closed (valve handle extended). Filter power switch must be turned on. Oil is discarded through the discard hose into a separate container. When filter tank is empty, return the switch to the N.O. position (valve handle retracted) when all frying oil is discarded.

COMPONENT LOCATION

2GRD45F KLEENSCREEN FRYER SHOWN
SOLID STATE CONTROLS ("D" MODEL)

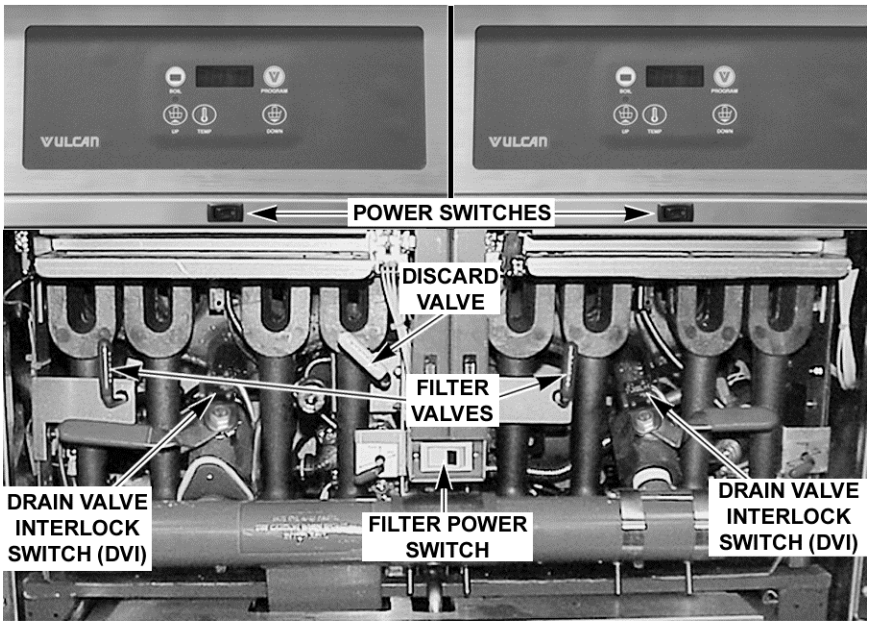

* PUMP MOTOR LOCATION - RIGHT SIDE FRYER SECTION ABOVE FILTER DRAWER.
* POWER SUPPLY BOX LOCATION - LEFT FRYER SECTION AT THE REAR.

7401

Fig. 46

COMPONENT AREA BEHIND CONTROL PANEL

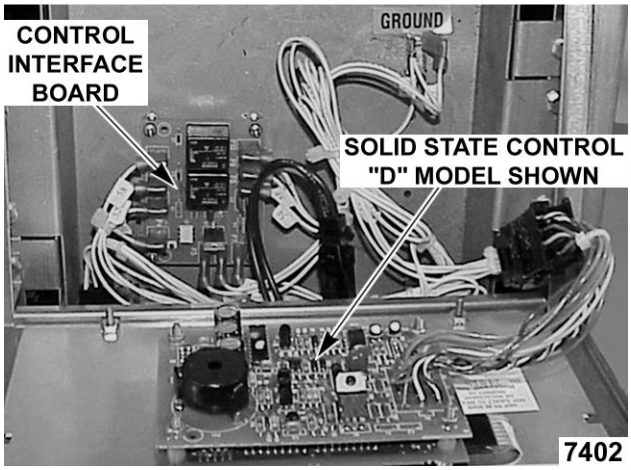

Fig. 47

DUAL BASKET LIFT COMPONENTS (REAR VIEW SHOWN)

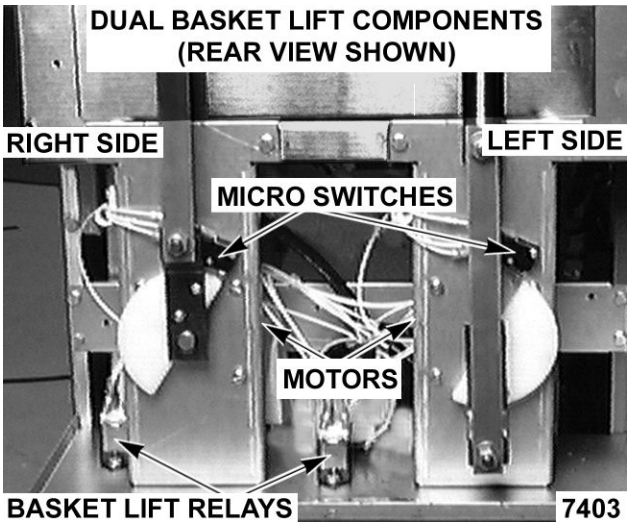

Fig. 48

POWER SUPPLY BOX

POWER SUPPLY BOX

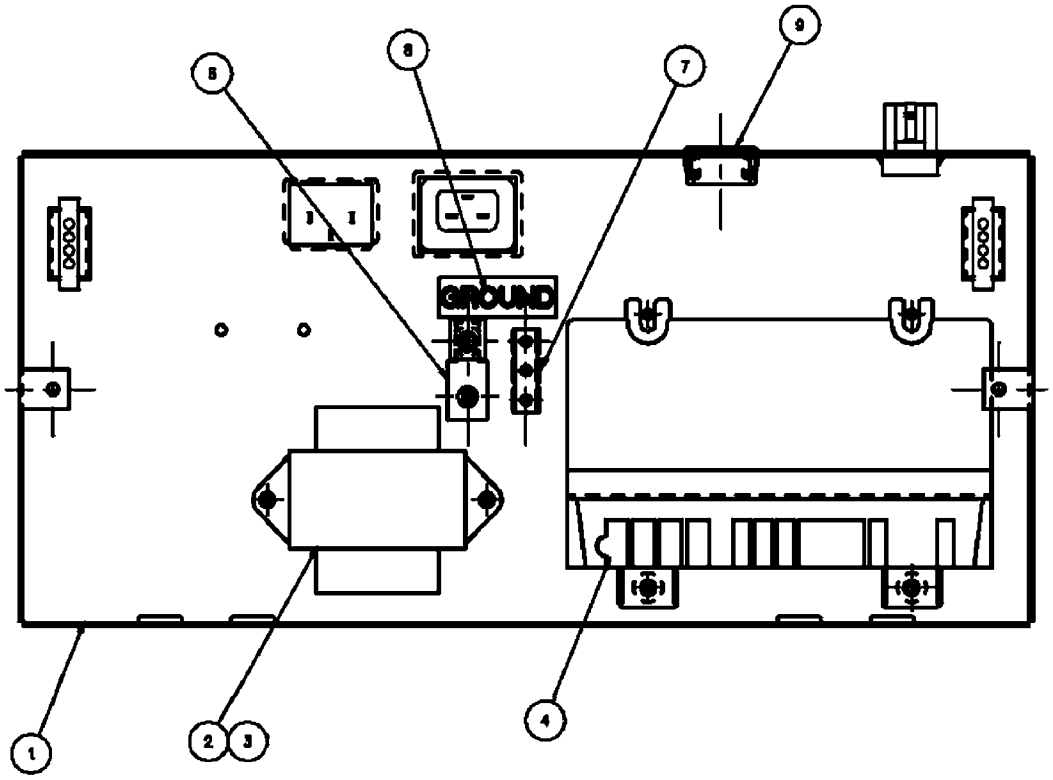

IT.	DESCRIPTION
9	RESTRAINT, CORD
8	DECAL, GROUND
7	TERMINAL
6	GROUND LUG
4	MODULE, IGNITION
3	TRANSFORMER 240V
2	TRANSFORMER 120V
1	BOX, POWER SUPPLY
G2	**BOX, POWER SUPPLY 240V
G1	*BOX, POWER SUPPLY 120V

*G1 120V WITH ELECTRONIC IGNITION
**G2 240V WITH ELECTRONIC IGNITION

NOTE: POWER SUPPLY BOX FOR ELECTRONIC IGNITION SHOWN. FOR MANUAL IGNITION, THE IGNITION CONTROL MODULE IS REMOVED.

7400

Fig. 49

SEQUENCE OF OPERATION

Solid State or Computer, Cooking Control
Refer to schematic diagram 7411 for Cooking Control operation.

FRY CYCLE - LIQUID FRYING OIL

If using solid shortening, the control should be programmed to use the MELT CYCLE. In the MELT CYCLE, the control will "cycle" the heat ON/OFF in short intervals. This will gradually heat and liquify the shortening until it reaches a temperature of 135ºF. Melt cycle default times are:

- Liquid (CY L) = 16 seconds on, 18 seconds off.
- Solid (CY S) = 8 seconds on, 26 seconds off.

- No melt (CY 0) = 100% on.

The control then resumes normal operation as described in this sequence.

1. Conditions.
    A. Fryer battery connected to correct supply voltage and properly grounded.

NOTE: Separate connections are required for fryer controls and filtering system controls.

    B. Gas supply valve on, and gas combination valve "knob" turned to ON.
    C. Power switch to fryer section in the OFF position.
    D. Frying oil at proper level in fry tank, and below last set point temperature used.
    E. Cooking control is set up properly and ready to use.
    F. Manual drain valve closed (drain valve interlock switch N.O. is closed).
    G. High limit thermostat closed.
2. Press Power On switch.
    A. Power to terminal 5 (com) on left and right basket relays.
    B. 24VAC transformer 1T energized.
3. Cooking control powers on, initializes, and performs a diagnostic self-check.

NOTE: If the control passes self-check, then the outputs are energized, and operation sequence continues. If control does not pass self-test, the control will display the appropriate message for the problem, disable the keypad, and the electronic alarm will sound continuously. Refer to TROUBLESHOOTING.

    A. Ignition module is powered (24VAC), initializes, and generates spark at ignitor.
        1) Pilot voltage (PV) N.O. contacts close, pilot valve energized at positive (+) terminal, and opens for gas flow to pilot.
            a. Pilot flame established. A micro amp "flame sense" current is rectified to ignition module through ignitor cable, and sparking stops.
            b. Main voltage (MV) N.O. contacts close, and provide ignition status input signal (24VAC) to cooking control at pin E1-6.

NOTE: If pilot ignition is not established within the first several seconds of ignition trial time, the cooking control displays a message indicating "pilot out" or "ignition failure" as the ignition module continues to generate a spark at the ignitor. If pilot is not established within 90 seconds of the ignition module being energized, the ignition module locks out power to gas valve. A message is displayed by the control indicating "ignition lockout," keypad is disabled, and electronic alarm sounds continuously. The system remains locked out until power switch is cycled to reset the system and restart the ignition trial cycle.

4. Cooking control evaluates the input from: ignition status at pin E1-6, drain valve interlock at pin E1-5, and temperature probe at pins E1-3 and E1-4 (high and low).
    A. If the inputs to the control are valid, and the frying oil temperature is below set point, the heat output (24VAC) at pin E1-8 is then activated, and power is applied to heat control Triac.
        1) Heat control Triac energized and supplies voltage to gas valve TH terminal.
            a. Main gas valve energized and opens for gas flow to burners.
            b. Burners light and begin heating frying oil in fry tank.

NOTE: As long as the ignition control module senses a pilot flame, the internal main voltage (MV) contacts (N.O.) on the ignition module remain closed, and main gas valve stays on.

5. Frying oil reaches set temperature.
    A. Cooking control deactivates the heat output (24VAC) at pin E1-8, and power is removed from heat control Triac.
        1) Main gas valve de-energized and closes.
            a. Gas flow stops and burners go out.
6. Cooking control cycles heat output on frying oil temperature until power switch is turned off, ignition input status is removed, drain valve interlock input status us removed, temperature probe input is outside acceptable limits, or a high limit condition occurs.

NOTE: Step 6A and 6B discuss open high limits. For additional information on cooking control error messages, refer to TROUBLESHOOTING.

A. If frying oil reaches 415ºF or higher, the cooking control deactivates the heat output and basket lift outputs, cooking timers are canceled (if active), keypad is disabled, display indicates "HI," and the electronic alarm sounds continuously. Turn power switch off to silence the alarm. Normal operation resumes when temperature drops below 415ºF.

B. If frying oil reaches 450ºF, the high limit thermostat opens, power is removed from the pilot valve, and then closes to stop pilot gas flow.

1) Ignition trial cycle will start but pilot will be unable to light. After several seconds of ignition trial time, the cooking control displays a message indicating "pilot out" or "ignition failure" as the ignition module continues to generate a spark at the ignitor. After 90 seconds, the ignition module locks out power to the gas valve. With the ignition status input removed from cooking control, a message is displayed by the control indicating "ignition lockout," keypad is disabled, and electronic alarm sounds continuously. Turn power switch off to silence alarm and reset the system. Normal operation will resume when temperature drops below 415ºF.

Kleenscreen Filtering System
Refer to wiring diagram 7410.

The filter valve handle and discard valve handle are connected to a mechanical valve and switch assembly to route the flow of oil in the filtering system, and supply power to the pump motor.

NOTE: The computer control contains a program feature that allows the operator to program a specific number of timed cooking cycles to complete, then alert the operator to filter the frying oil/shortening. When the actual cooking count reaches the filter count setting, "FILTER" will flash in the right display when fryer is idle. Normal fryer operation continues without a cooking lockout. This feature can also be disabled. Refer to Installation & Operation Manual for specific instructions on filtering.

1. Conditions.

A. Fryer connected to correct supply voltage and is properly grounded.

NOTE: Separate connections are required for the fryer controls and the filtering system controls.

B. Power switch to fryer section turned off.

C. Frying oil between 300ºF and 350ºF.

D. Filter drawer assembly installed properly.

E. Filter power switch turned off.

F. Filter valve handle (red) retracted.

1) Filter valve switch N.O. contacts open.

G. Discard valve handle (white) retracted.

1) Discard valve switch N.O. contacts open.

NOTE: On computer control fryers, control should be set up properly, ready to use.

2. Turn on the power switch for the fryer section to be filtered.

3. Set cooking control between 300ºF (minimum) and 350ºF (maximum).

NOTE: Oil should not be filtered outside of this temperature range. At lower temperatures, the oil is thicker, which may increase filtering time, and place a greater load on the pump. At higher oil temperatures, oil seal life is decreased.

A. Allow oil to cycle at set temperature for approximately 10 minutes.

NOTE: If using solid shortening, after it has melted, stir the oil to eliminate any solid shortening in cold zone of the fry tank.

4. Solid State Control:

A. Turn off power switch to fryer section to be filtered.

B. Open drain valve to fryer section in need of filtering, and drain the frying oil/shortening into filter tank.

NOTE: If using solid shortening, allow hot shortening to stand in filter tank for approximately 6 minutes prior to filtering.

NOTE: Drain valve interlock contacts open, and the position of drain valve is indicated to the cooking control.

C. Turn on filter power switch.

1) Switch pilot light comes on.

D. Extend filter valve handle of same fryer section.

1) Filter valve switch N.O. contacts close.

a. Power supplied to pump motor.

E. Pump motor circulates oil through filter until power is removed.

F. When the oil filtering process is complete, close the manual drain valve to the fryer, and allow the fry tank to refill.

NOTE: Drain valve interlock contacts close, and the position of the drain valve is indicated to the cooking control.

G. When all filtered oil is returned to the fryer, retract the filter valve handle.

1) Power is removed from pump motor.

H. Turn off filter power switch.

NOTE: If using solid shortening, when all filtered oil is returned to the fry tank and filter power switch is off, open the filter drawer approximately 1 inch. Allow the remaining shortening in the line to drain into the filter tank to prevent possible clogging after the shortening cools and solidifies. Close the filter drawer when complete.

5. Computer Control:

A. The number of cooking cycles reaches the filter count setting.

B. The right side display indicates "FILTER" and flashes when the fryer is idle.

NOTE: A manual filter cycle can also be done at any time by following the procedure outlined steps 4B through 4H in this section (Step 4B). Display will show "DRAINING" "TURN OFF." The filter timer can still be initiated, if desired.

C. Open drain valve to fryer section in need of filtering, and drain the frying oil/shortening into filter tank.

NOTE: If using solid shortening, allow hot shortening to stand in filter tank for approximately 6 minutes prior to filtering.

NOTE: Drain valve interlock contacts open, and the position of the drain valve is indicated to the cooking control.

NOTE: Steps 5D through 5G should be performed in immediate succession to start the filtering process and the filter timer.

D. Turn on filter power switch.

1) Switch pilot light comes on.

E. Extend filter valve handle of the same fryer section.

1) Filter valve switch N.O. contacts close.

a. Power supplied to pump motor.

F. Pump motor circulates oil through filter until power is removed.

G. Press either "TIME" key to start filter timer countdown.

1) "FILTER" and the remaining filter time are displayed.

H. Filter time expires:

1) "FILTER" "DONE" is displayed, and the electronic alarm sounds for approximately 5 seconds. Display then changes to "CLOSE" "DRAIN."

I. Close drain valve:

1) "TURN OFF" is displayed.

NOTE: Closing drain valve before filter time expires will stop filter timer but will not reset filter counts. The "FILTER" prompt can only be reset by completing a filtering cycle or disabling the function in programming mode. Cycling the power will not reset this prompt.

NOTE: Drain valve interlock contacts close, and the position of drain valve is indicated to the cooking control.

J. When all filtered oil is returned to fryer, retract filter valve handle.

1) Power is removed from pump motor.

K. Turn off filter power switch.

NOTE: If using solid shortening, when all filtered oil is returned to fry tank and filter power switch is off, open filter drawer approximately 1 inch. Allow the remaining shortening in the line to drain into the filter tank to prevent possible clogging after the shortening cools and solidifies. Close the filter drawer when complete.

L. Turn off power switch.

SCHEMATIC DIAGRAMS

Electronic Ignition, Solid State or Computer Control

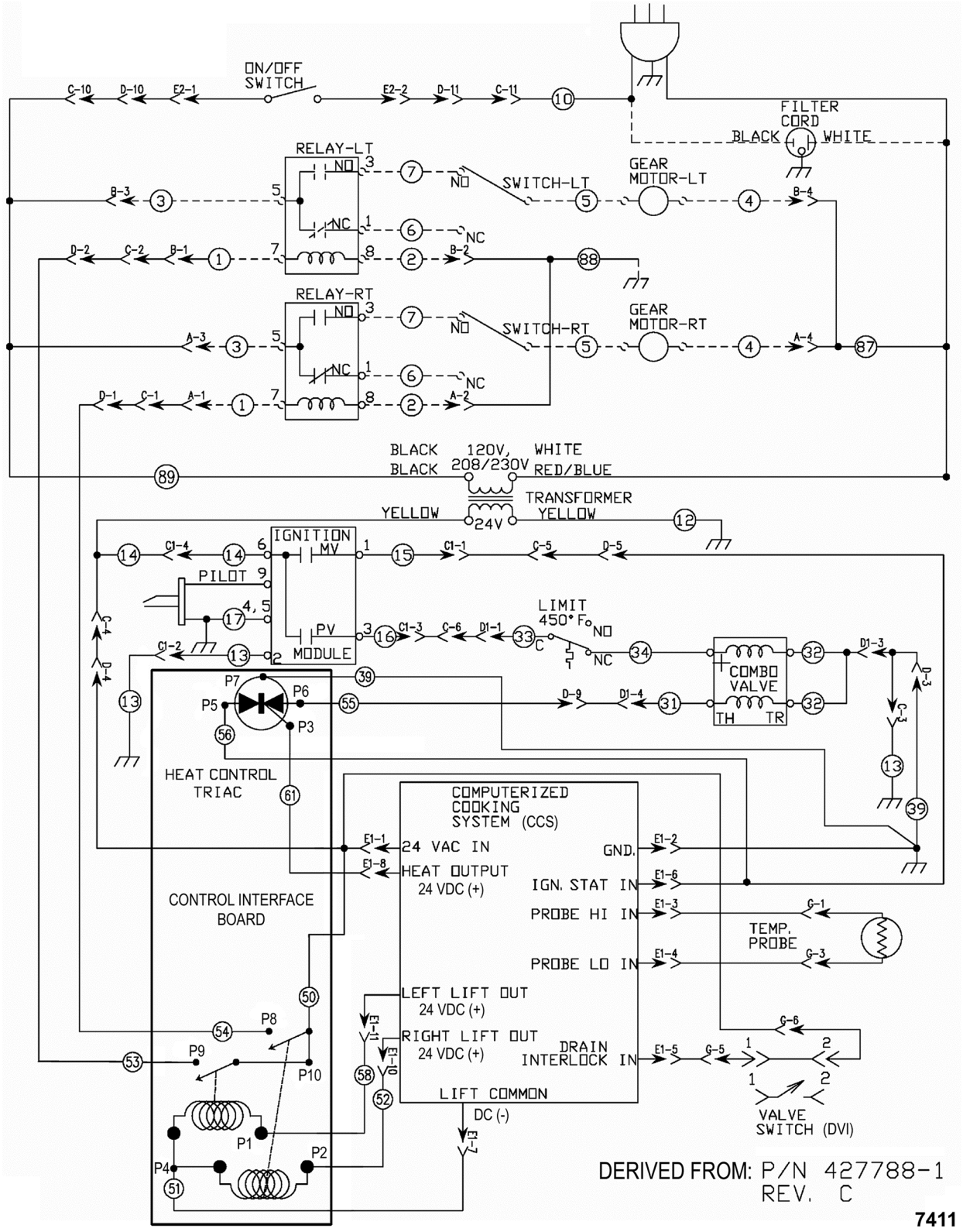

Fig. 50

Manual Pilot Ignition, solid State or Computer Control

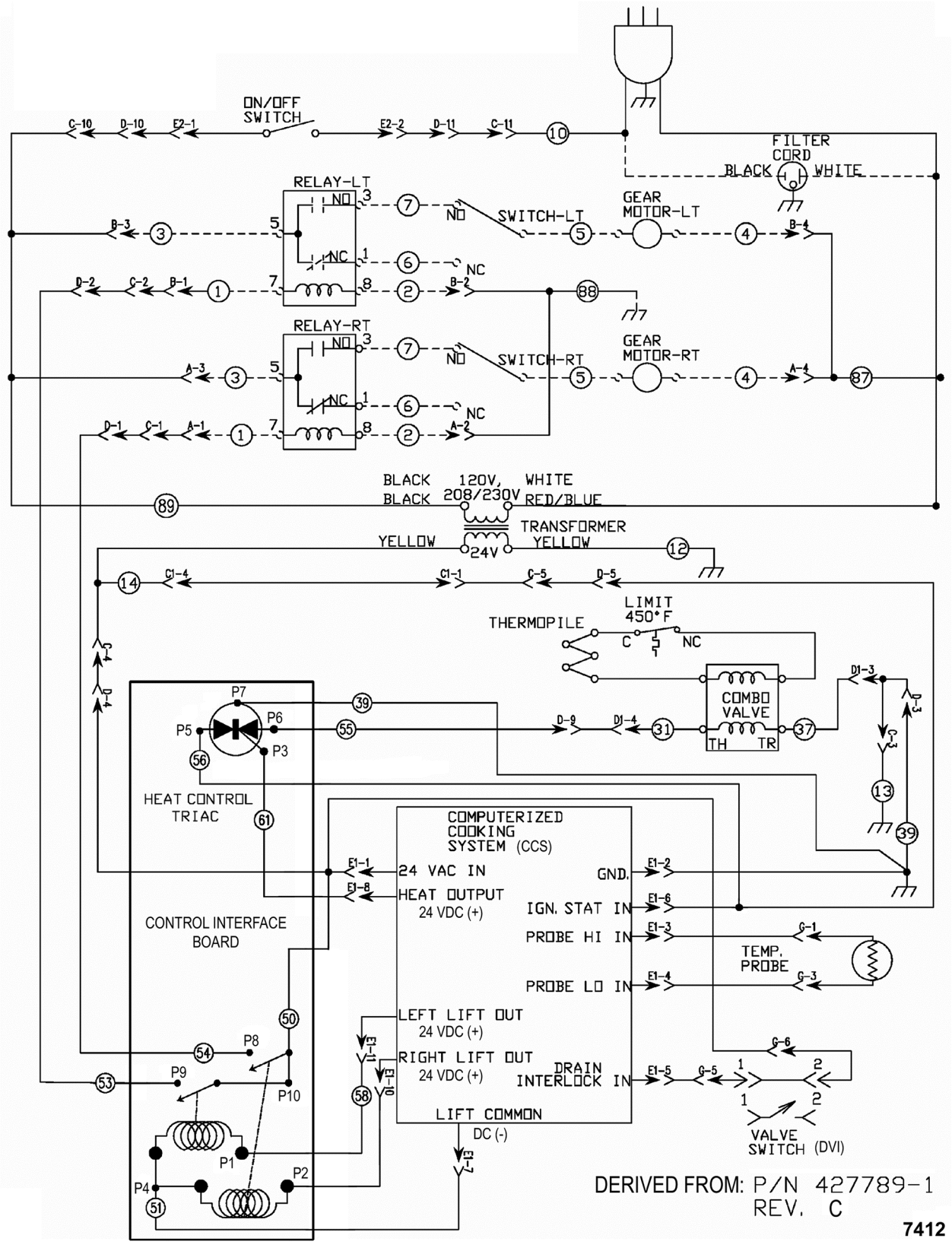

Fig. 51

WIRING DIAGRAMS

Electronic Ignition, Solid State or Computer Control

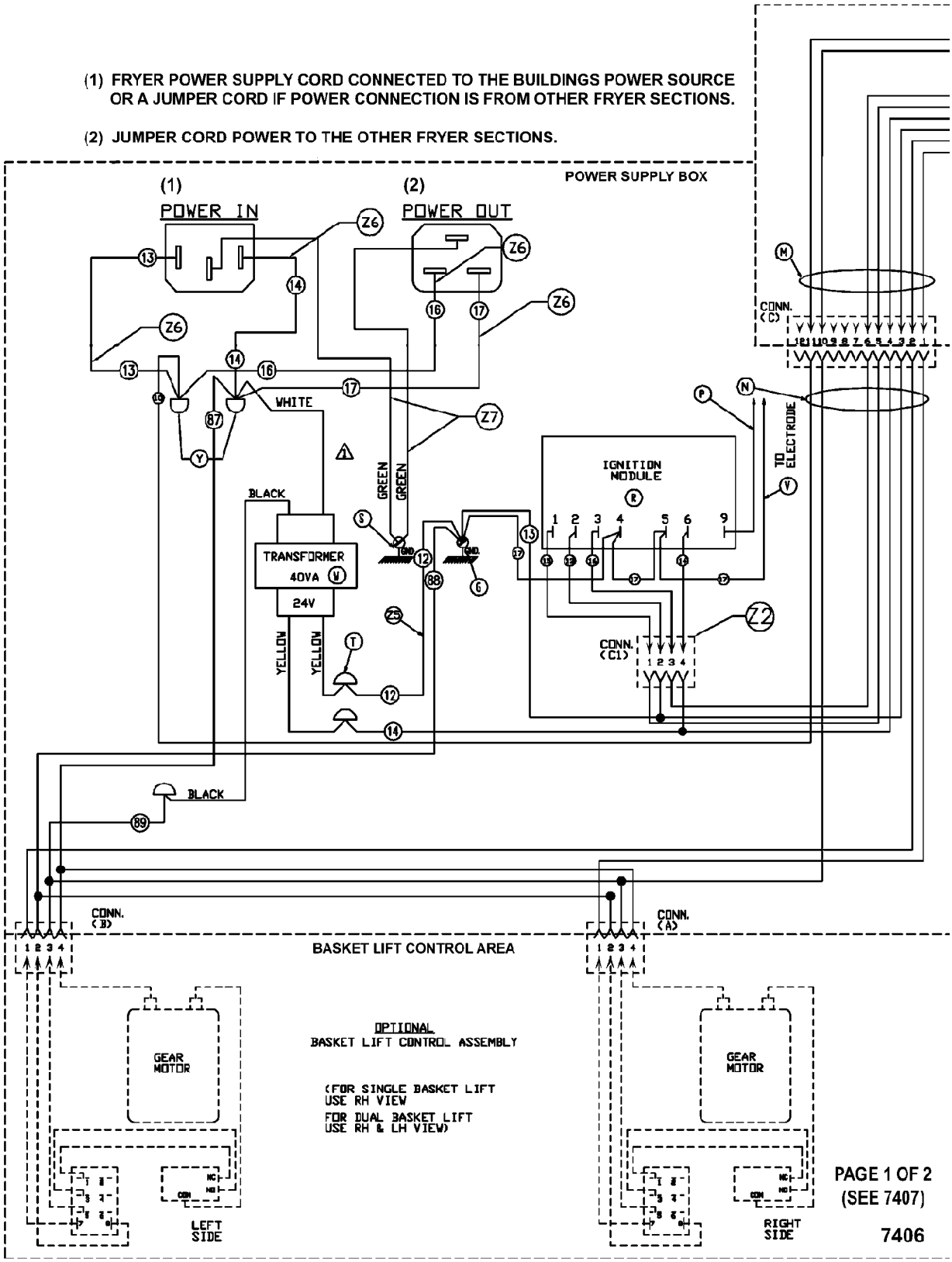

Fig. 52

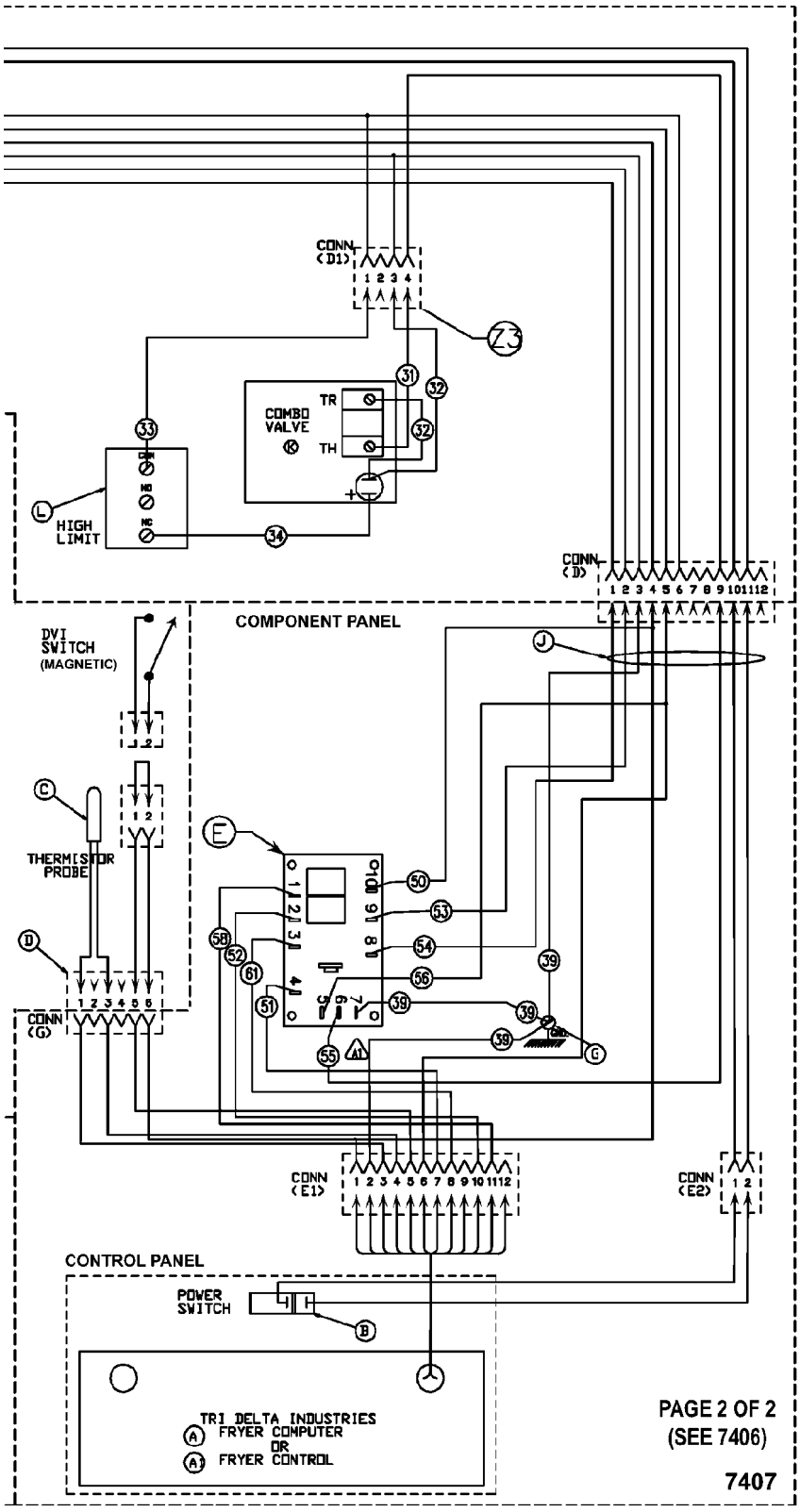

req	REQ.	IL	DESCRIPTION	MDL
2	2	Z7	WIRE ASSEMBLY (GREEN)	-
4	4	Z6	WIRE ASSEMBLY [13,14,16,17]	-
1	1	Z5	WIRE ASSEMBLY [12]	-
2	2	Z4	WIRE ASSEMBLY [8,9]	-
1	1	Z3	MANIFOLD HARNESS	-
1	1	Z2	HARNESS-IGNITION MODULE	-
1	1	Z1	OPTIONAL FILTER SUPPLY CORD	-
2	2	Y	WIRE NUT YELLOW	-
1	1	W	24V 40VA TRANSFORMER 120 VOLT / 240 VOLT	
1	1	V	LEAD ASSEMBLY [17]	-
3	3	T	WIRE NUT	-
1	1	S	GROUND LUG	-
1	1	R	IGNITION MODULE	-
1	1	P	IGNITOR CABLE	-
1	1	N	POWER HARNESS	-
1	1	M	MAIN HARNESS	-
1	1	L	HI-LIMIT	-
1	1	K	COMBO VALVE NAT / LP	
1	1	J	INTERFACE HARNESS	-
1	2	G	TERMINAL, STATIONARY	-
1	1	E	CONTROL INTERFACE TRIDELTA	-
1	1	C	D.V.I. HARNESS ASSEMBLY	-
1	1	C	THERMISTOR	-
1	1	B	ROCKER SWITCH ASSEMBLY	-
1	-	A1	TDI CONTROL	-
-	1	A	TDI COMPUTER	-

RD MODELS
RC MODELS

WIRING INFORMATION
FOR UNITS LISTED

CCS FRYERS W/E.I. ,W & WO/LIFTS
WIRING DIAGRAM

DRAWN BY _____ APPROVED BY _____ SHEET 1 OF 1
SCALE NONE
DERIVED FROM: D427616-1 REV B

Fig. 53

Manual Pilot Ignition, Solid State or Computer Control

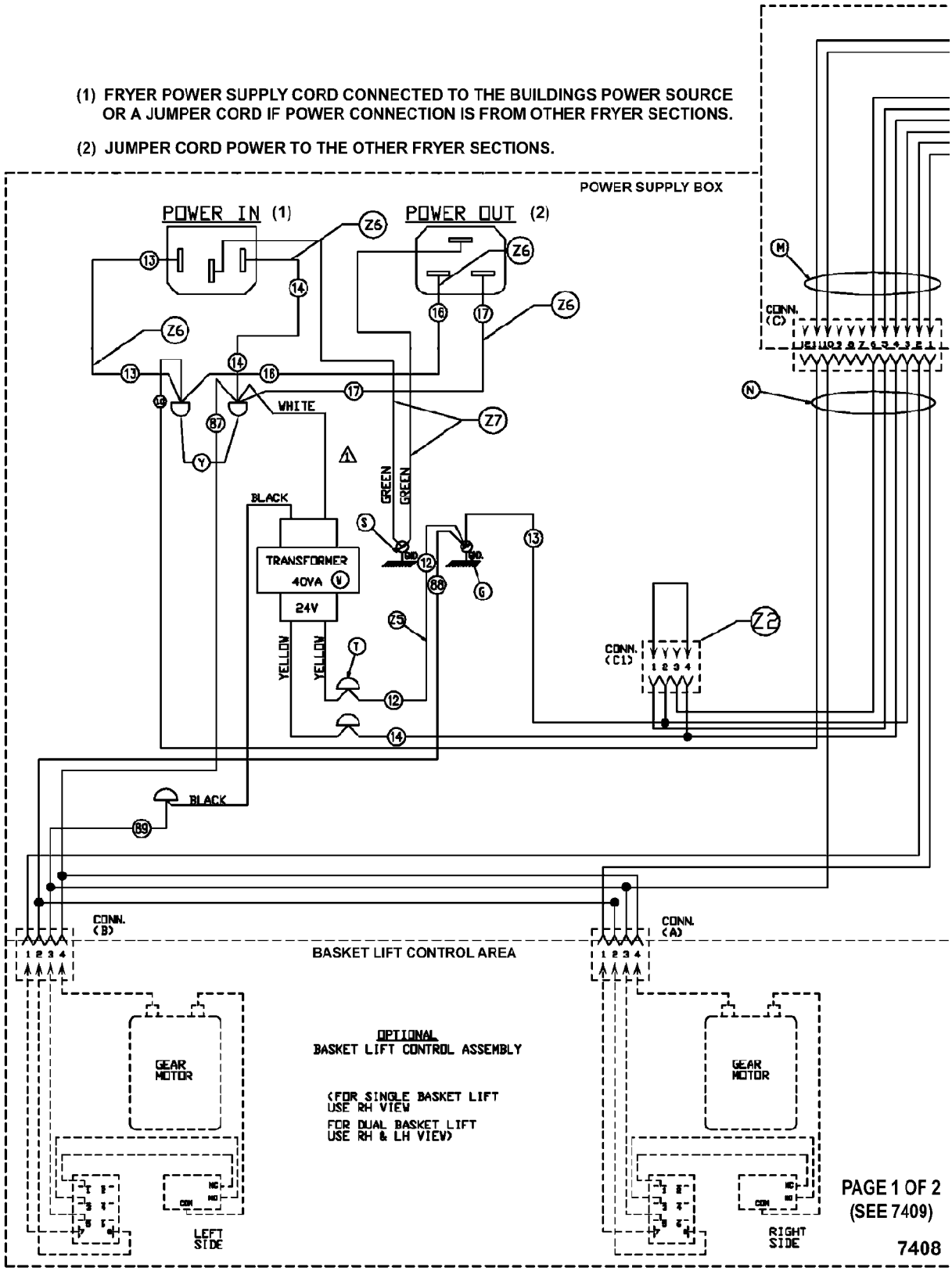

Fig. 54

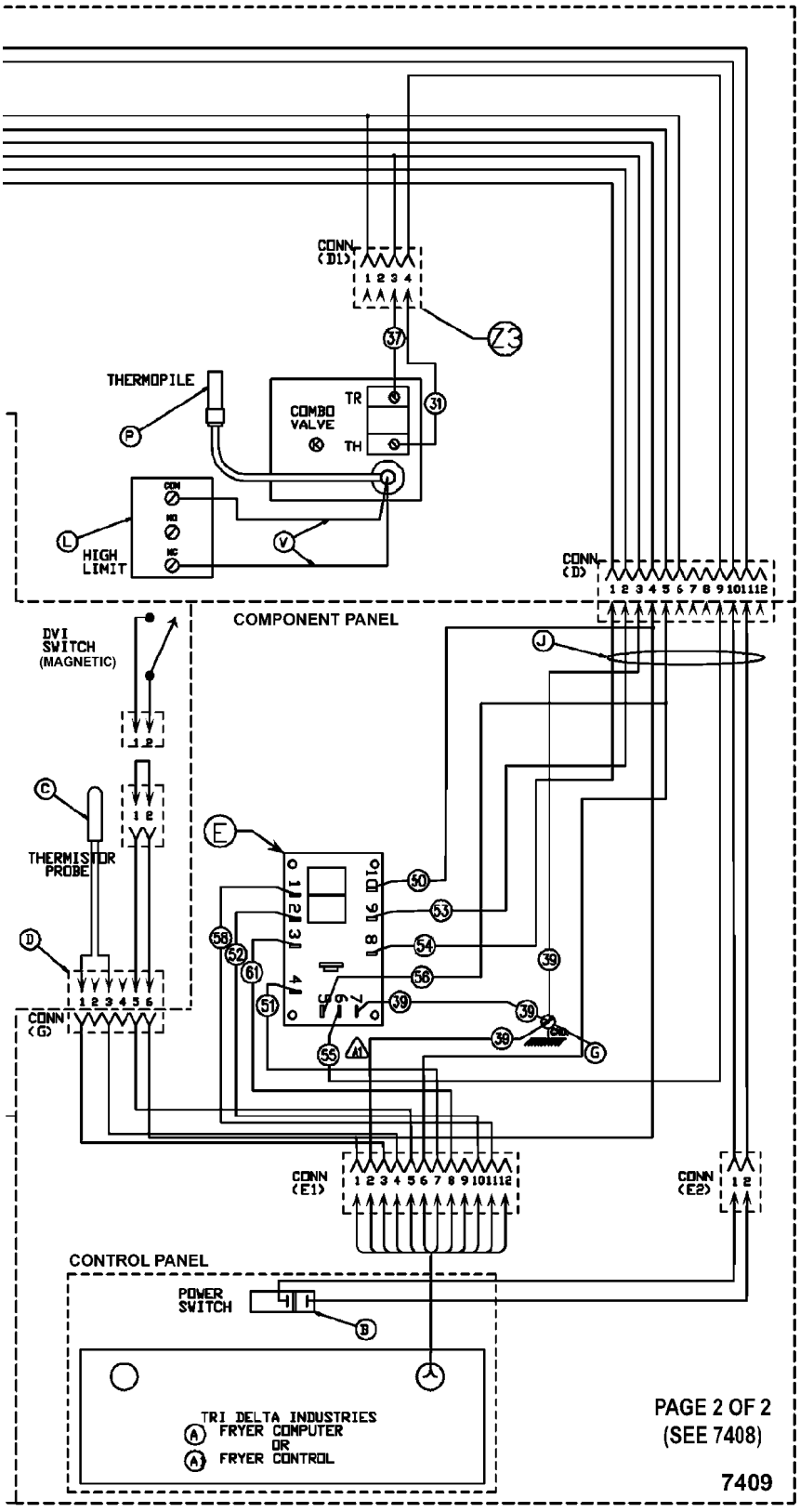

req.	RQ.	IT.	DESCRIPTION	FIN.
2	2	Z7	WIRE ASSEMBLY (GREEN)	–
4	4	Z6	WIRE ASSEMBLY [13,14,16,17]	–
1	1	Z5	WIRE ASSEMBLY [12]	–
2	2	Z4	WIRE ASSEMBLY [8,9]	–
1	1	Z3	MANIFOLD HARNESS	–
1	1	Z2	HARNESS-IGNITION MODULE	–
1	1	Z1	OPTIONAL FILTER SUPPLY CORD	–
2	2	Y	WIRE NUT YELLOW	–
1	1	W	24V 40VA TRANSFORMER 120 VOLT / 240 VOLT	
1	1	V	CABLE ASSEMBLY [BUTTERFLY]	–
3	3	T	WIRE NUT	–
1	1	S	GROUND LUG	–
1	1	P	THERMOPILE	–
1	1	N	POWER HARNESS	–
1	1	M	MAIN HARNESS	–
1	1	L	HI-LIMIT	–
1	1	K	COMBO VALVE NAT / LP	
1	1	J	INTERFACE HARNESS	–
1	2	G	TERMINAL, STATIONARY	–
1	1	E	CONTROL INTERFACE, TRIDELTA	–
1	1	D	D.V.I. HARNESS ASSEMBLY	–
1	1	C	THERMISTOR	–
1	1	B	ROCKER SWITCH ASSEMBLY	–
1	–	A1	TDI CONTROL	–
–	1	A	TDI COMPUTER	–

RD MODELS
RC MODELS

WIRING INFORMATION
FOR UNITS LISTED

WIRING DIAGRAM
CCS FRYER WO/ELECT. IGN. & W & WO/DUAL B.L.

DRAWN BY _____ APPROVED BY _____ SHEET 1 OF 1
DERIVED FROM: D 427616-2
SCALE NONE
REV B

Fig. 55

Junction Box, Kleenscreen Filtering System

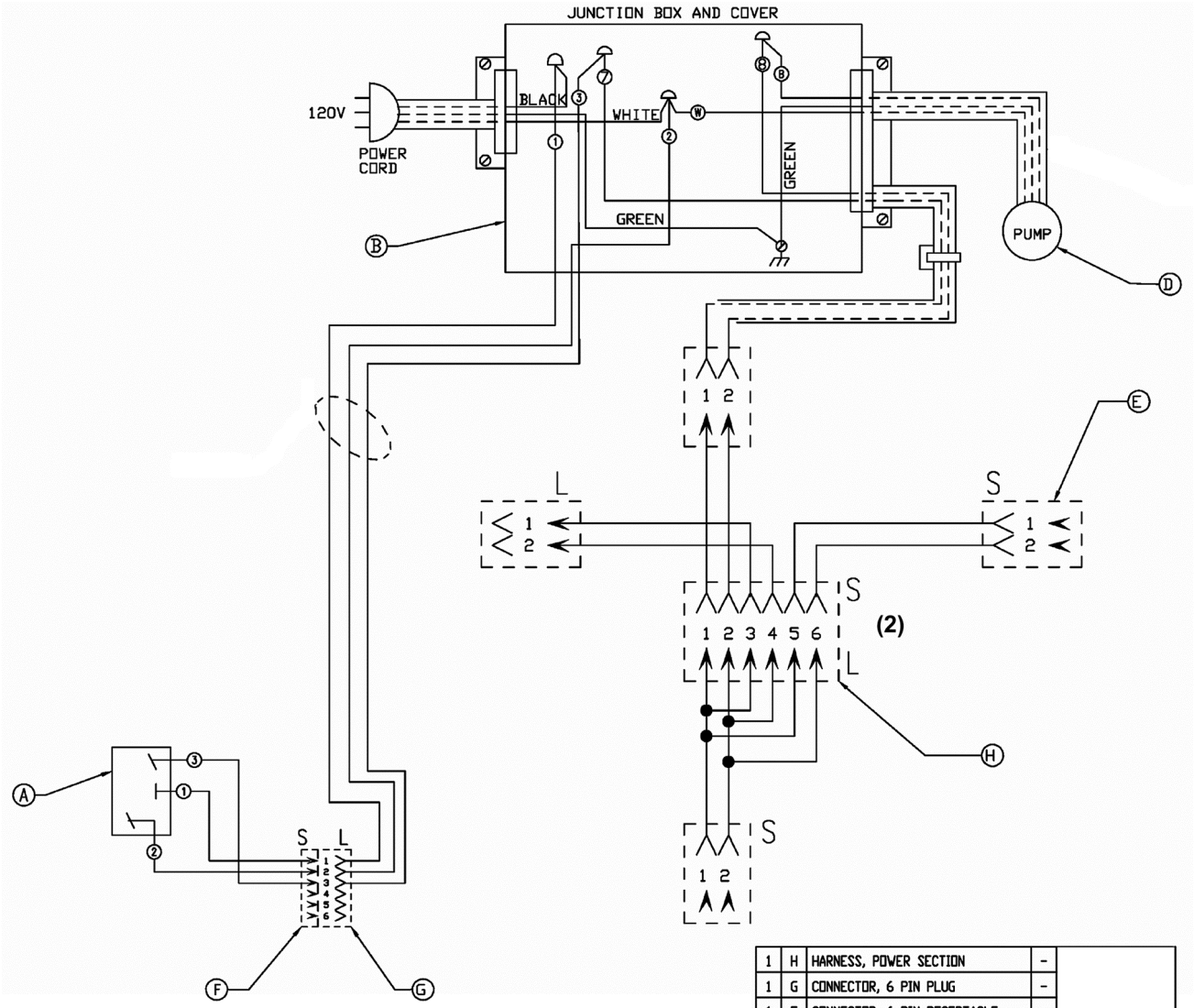

REQ.	IT.	DESCRIPTION	FIN.
1	H	HARNESS, POWER SECTION	-
1	G	CONNECTOR, 6 PIN PLUG	-
1	F	CONNECTOR, 6 PIN RECEPTACLE	-
1	E	HARNESS, 'T'	-
1	D	MOTOR, PUMP 50/60 HZ. 120 V. / 208 V. / 230 V.	
1	B	POWER BOX ASSEMBLY	-
1	A	SWITCH, LIGHTED ROCKER	-

WIRING INFORMATION
FOR UNITS LISTED

WIRING DIAGRAM 120,208,230 V. 50/60 HZ.
FRYING OIL/SHORTENING FILTRATION SYSTEM

DRAWN BY
APPROVED BY
SHEET 1 OF
SCALE NONE
DERIVED FROM: D426767
REV. B

7410

(1) Separate power supply cord for pump motor.

(2) S= Short Connector; L= Long Connector.

Fig. 56

Frymate (Dump Station)

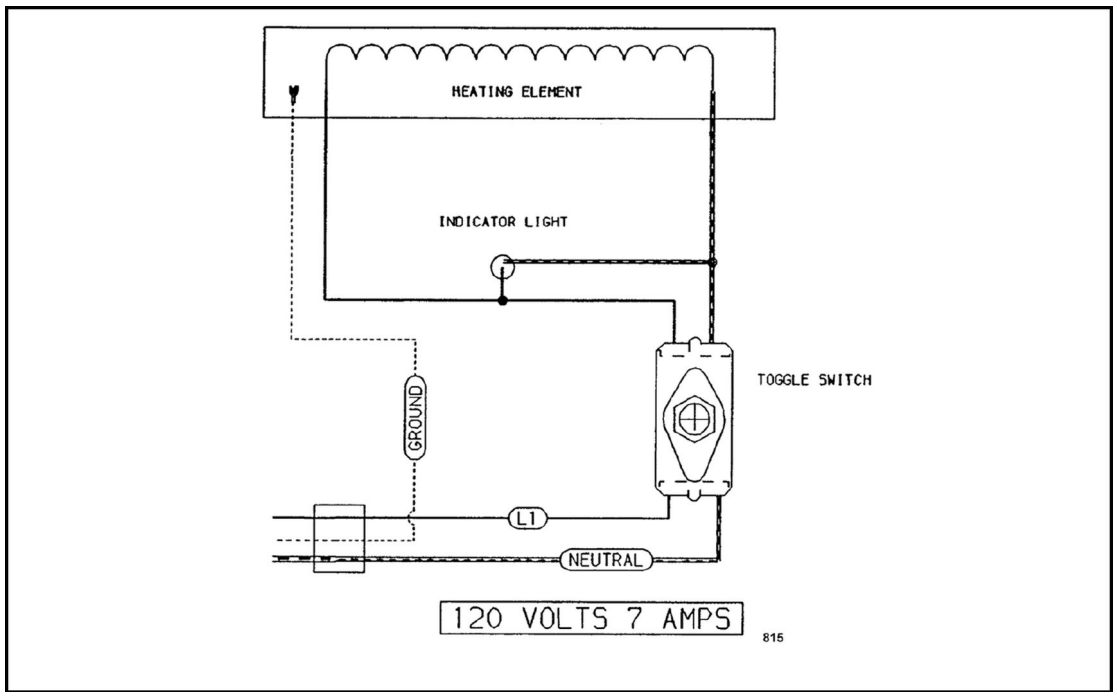

Fig. 57

TROUBLESHOOTING

ALL MODELS

Symptoms	Possible Causes
No spark to ignite pilot gas; display lit.	1. Drain valve switch open (alarm message displayed), or switch malfunction. 2. Shorted electrode, or an improper ground on ignitor/flame sense. 3. Ignitor cable open. 4. Interconnecting wiring malfunction. 5. Ignition module malfunction.
Sparks, but gas does not ignite; display lit.	1. Gas combination valve off or inoperative. 2. Manual gas valve closed. 3. Gas supply off or insufficient gas pressure. 4. High limit thermostat open. 5. Interconnecting wiring malfunction. 6. Ignition module malfunction.
Gas pilot ignites, but will not maintain flame.	1. Ignitor lead connections malfunction. 2. Ignitor ground inoperative. 3. Ignitor/flame sense misaligned or malfunction. 4. Insufficient gas pressure. 5. Incorrect polarity from transformer to ignition module.
Gas burner(s) ignite, but will not maintain flame.	1. Gas pressure incorrect. 2. Gas orifice obstructed or incorrect. 3. Burner malfunction. 4. Gas pilot malfunction.
Excessive or low heat.	1. Incorrect temperature offset selected. 2. Temperature probe malfunction. 3. cooking control malfunction. 4. Interface board malfunction. 5. Gas pressure incorrect. 6. Gas orifice obstructed or incorrect.
Intermittent problems.	1. High ambient temperatures. 2. Wiring connections loose.

Symptoms	Possible Causes
No power to cooking control; fryer does not heat.	1. Power switch off or malfunction. 2. Main circuit breaker off. 3. Transformer inoperative. 4. Interconnecting wiring malfunction.
High limit thermostat shutting off gas burner.	1. Frying oil level below minimum fill line. 2. Probe malfunction. 3. Control malfunction.
Excessive time to melt shortening (more than 45 minutes).	1. Melt cycle timing incorrect. 2. Insufficient gas pressure. 3. Gas orifice pugged or obstructed. 4. Probe malfunction. 5. Control malfunction.

SOLID STATE CONTROL

Alarms	Description
Open Probe	If an open probe is detected, the heat demand (heat on) and basket lift outputs are disabled. Any cooking in progress is canceled, and all operator buttons are disabled. The display shows "Prob," and the electronic alarm sounds continuously. **NOTE:** A temperature of less than 40ºF is an open probe equivalent.
Shorted Probe	If a shorted probe is detected, the heat demand (heat on) and basket lift outputs are disabled. Any cooking in progress is canceled, and all operator buttons are disabled. The display shows "HI," and the electronic alarm sounds continuously. **NOTE:** A temperature of 460ºF or greater is a shorted probe equivalent.
High Temperature	If the temperature is greater than or equal to 415ºF, the heat demand (heat on) is disabled. Any cooking in progress is canceled, and all operator buttons are disabled. The display shows "HI," and the electronic alarm sounds continuously. Normal fryer operation resumes when the temperature drops below the high temperature alarm level.
Ignition Status	If this input is not active (24VAC = active), the display will show "FIrE" "OUt" (for gas pilot out). If the input remains inactive for greater than 90 seconds, the display will show "Ign" "LoC" (for ignition lockout), the electronic alarm will sound continuously, and the controller will be disabled (all outputs including heat demand off) until power is cycled.
Drain Valve Interlock (DVI)	When drain valve is opened, the DVI switch contacts open, and the 24VAC input to the controller is removed. The heat demand (heat on) and basket lift outputs are disabled. Any cooking in progress is canceled, and all operator buttons are disabled. The display will alternate between "drn" "tUrn "oFF" for 3 seconds each in a continuous loop. When the drain valve is closed, the DVI switch contacts close, and the 24VAC input to the controller is restored. The heat demand (heat on) and all operator buttons will remain disabled. The display will alternate between "tUrn" "oFF" for 3 seconds each in a continuous loop until power is cycled.

COMPUTER CONTROL

Alarms	Description
Open Probe	If an open probe is detected, the heat demand (heat on) and basket lift outputs are disabled. Any cooking in progress is canceled, and all operator buttons are disabled. The display shows "PROBE OPEN," and the electronic alarm sounds continuously. **NOTE:** A temperature of less than 40ºF is an open probe equivalent.
Shorted Probe	If an open probe is detected, the heat demand (heat on) and basket lift outputs are disabled. Any cooking in progress is canceled, and all operator buttons are disabled. The display shows "PROBE SHORT," and the electronic alarm sounds continuously. **NOTE:** A temperature of 450ºF or greater is a shorted probe equivalent.
High Temperature	If the temperature is greater than or equal to 415ºF, the heat demand (heat on) is disabled. Any cooking in progress is canceled, and all operator buttons are disabled. The display shows "HI TMP," and the electronic alarm sounds continuously. Normal fryer operation resumes when the temperature drops below the high temperature alarm level.
Ignition Status	If this input is not active (24VAC = active), the display will show "PILOT OUt" (for gas pilot out). If the input remains inactive for greater than 90 seconds, the display will show "Ign" "LoC" (for ignition lockout), the electronic alarm will sound continuously, and the controller will be disabled (all outputs including heat demand off) until power is cycled.
Drain Valve Interlock (DVI)	When drain valve is opened, the DVI switch contacts open, and the 24VAC input to the controller is removed. The heat demand (heat on) and basket lift outputs are disabled. Any cooking in progress is canceled, and all operator buttons are disabled. The display will show "DRAINING" "TURN OFF." If the filter prompt is active, "DRAINING" "FILTER" is displayed. If the dispose prompt is active, "DRAINING" "DISPOSE" is displayed. When the drain valve is closed, the DVI switch contacts close, and the 24VAC input to the controller is restored. The heat demand (heat on) and all operator buttons will remain disabled. The display will show "TURN OFF" until power is cycled.

SOLID STATE OR COMPUTER CONTROL HARNESS PIN-OUTS

Pin No.	Inputs	Pin No.	Outputs [3]
E1-1	24VAC Hot	E1-8	24VDC (+) Heat Demand
E1-2	24VAC Neutral [1]	E1-9	Not used at this time [2]
E1-3	Probe High (red)	E1-10	24VDC (+) Left Basket Lift
E1-4	Probe Low (white)	E1-11	24VDC (+) Right Basket Lift
E1-5	Drain Valve Interlock (24VAC) N.O.	E1-12	No Connection
E1-6	Ignition Status (24VAC)	—	—
E1-7	Relay DC (-) Common	—	—
NOTES:	**[1] Connected to ground internally.** **[2] Available for external buzzer output (24VAC).** **[3] Outputs to interface control board.**		

INTERFACE CONTROL BOARD PIN-OUTS

Pin. No.	Inputs	Pin No.	Outputs
P1	24VDC Left Basket Lift	P6	Heat Demand Triac (24VAC) [2]
P2	24VDC Right Basket Lift	P7	System Ground
P3	24VDC Heat Demand Control	P8	24VAC Left Basket Lift [3]
P4	Control Common (-)	P9	24VAC Right Basket Lift [3]
P5	Heat Demand Triac (24VAC)	—	—
P10	Relay Contacts (24VAC) [1]	—	—
NOTES:	**[1] Relays connected internally.** **[2] To "TH" terminal on gas valve (main).** **[3] To basket lift relay coils.**		

FRYMATE (DUMP STATION) WITH OPTIONAL HEATER

Symptom	Possible Causes
No heat.	1. Unplugged. 2. Power switch off or inoperative. 3. Main circuit breaker off or open. 4. Malfunctioning heat assembly.

KLEENSCREEN FILTERING SYSTEM

Symptom	Possible Causes
Oil not filtering, pump motor is on.	1. Filter screen plugged. 2. Clog in filter system lines. **NOTE:** If using solid shortening, when all filtered oil is returned to fry tank, and filter power switch is off, open filter drawer approximately 1 inch. Allow the remaining shortening in the line to drain into filter tank to prevent possible clogging after the shortening cools and solidifies. Close filter drawer when complete. 3. Frying oil/shortening below 300ºF too "thick." 4. Filter valve switch malfunction. 5. Filter valve mechanical malfunction. 6. Pump is inoperative.

Symptom	Possible Causes
Frying oil not discarding, pump motor on.	1. Filter screen plugged. 2. Clog in filter system lines. **NOTE:** If using solid shortening, when all filtered oil is returned to fry tank, and filter power switch is off, open filter drawer approximately 1 inch. Allow the remaining shortening in the line to drain into filter tank to prevent possible clogging after the shortening cools and solidifies. Close filter drawer when complete. 3. Frying oil/shortening below 300ºF too "thick." 4. Discard valve switch malfunction. 5. Discard valve mechanical malfunction. 6. Discard hose connection not fully engaged. 7. Pump is inoperative.
Pump motor is not running.	1. Filter power switch inoperative. 2. Filter/discard handle not extended. 3. Filter/discard valve switch malfunction. 4. Filter relay malfunction. 5. Pump motor inoperative.