SERVICE MANUAL



GR Series Gas Fryers with NCC Controls (formerly Tridelta / Built after 3/05)

Use this manual for Fryers built after March 2005. Use Service Manual F25114 (8/02) for Fryers built prior to March 2005.

GR Series

- NOTICE -

This Manual is prepared for the use of trained Vulcan Service Technicians and should not be used by those not properly qualified.

This manual is not intended to be all encompassing. If you have not attended a Vulcan Service School for this product, you should read, in its entirety, the repair procedure you wish to perform to determine if you have the necessary tools, instruments and skills required to perform the procedure. Procedures for which you do not have the necessary tools, instruments and skills should be performed by a trained Vulcan Service Technician.

The reproduction, transfer, sale or other use of this Manual, without the express written consent of Vulcan, is prohibited.

This manual has been provided to you by ITW Food Equipment Group LLC ("ITW FEG") without charge and remains the property of ITW FEG, and by accepting this manual you agree that you will return it to ITW FEG promptly upon its request for such return at any time in the future.

TABLE OF CONTENTS

SERVICE UPDATES 4
SERVICE UPDATES 4

GENERAL 5
INTRODUCTION 5
MODEL AND ML NUMBERS 5
SINGLE FLOOR MODEL FRYERS 5
KLEENSCREEN FILTERING SYSTEM 6
SPECIFICATIONS 8
TOOLS 9

REMOVAL AND REPLACEMENT OF PARTS 10
COVERS AND PANELS 10
COOKING CONTROLS 11
DISCARD VALVE SWITCH (KLEENSCREEN FRYERS ONLY) 11
GAS BURNERS 12
GAS ORIFICE 13
GAS COMBINATION VALVE 13
GAS PILOT 14
TEMPERATURE PROBE 15
HIGH LIMIT THERMOSTAT 16
POWER SUPPLY BOX COMPONENTS 17
FILL SOLENOID VALVE (KLEENSCREEN FRYERS ONLY) 18
BASKET LIFT TUBE 18
BASKET LIFT MOTOR 19
BASKET LIFT CAM SWITCH 19
BASKET LIFT CAM 20
PUMP AND MOTOR (KLEENSCREEN FRYERS ONLY) 20
FRY TANK ASSEMBLY 21

SERVICE PROCEDURES AND ADJUSTMENTS 23
TEMPERATURE PROBE TEST 23
COOKING CONTROL CALIBRATION 23
ELECTRONIC IGNITION SYSTEM 24
FLAME SENSE CURRENT CHECK 24
ELECTRONIC IGNITION CONTROL TEST 25
GAS MANIFOLD PRESSURE ADJUSTMENT 26
BASKET LIFT ARM ADJUSTMENT 27
SOLID STATE CONTROL 27
COMPUTER CONTROL - OLDER CONTROLS 29
COMPUTER CONTROL - NEWER CONTROLS 31

ELECTRICAL OPERATION 36
COMPONENT FUNCTION 36
COMPONENT LOCATION 37
POWER SUPPLY BOX 37
SEQUENCE OF OPERATION 38
SCHEMATIC DIAGRAMS 42
WIRING DIAGRAMS 45

TROUBLESHOOTING 53
ALL MODELS 53
SOLID STATE CONTROL 54
COMPUTER CONTROL 55
SOLID STATE OR COMPUTER CONTROL HARNESS PIN-OUTS 56
INTERFACE CONTROL BOARD PIN-OUTS 56
FRYMATE (DUMP STATION) WITH OPTIONAL HEATER 56

KLEENSCREEN FILTERING SYSTEM 57

© VULCAN 2017

SERVICE UPDATES

SERVICE UPDATES

July 2017

- Added COMPUTER CONTROL - NEWER CONTROLS.
- Updated TOOLS.
- Updated COMPUTER CONTROL - OLDER CONTROLS.

GENERAL

INTRODUCTION

This Service Manual covers specific service information related to the models listed on the front cover. Starting in March, 2005, production model fryers are built using a solid state control and computer control from National Controls Corporation NCC (formerly Tridelta Industries TDI). The features and operation of the cooking controls for both single floor model fryers and Kleenscreen battery fryers include fryer energy selection (gas or electric) and number of basket lifts selection.

However, some of the features and operation of the cooking controls for Kleenscreen battery fryers have changed and now include:

- Filter key on the control panel to start a filtering cycle (replaces boil key).
- Fill solenoid valve to allow flow of shortening through filtering system (replaces mechanical valve and filter handle).

MODEL AND ML NUMBERS

Model	ML No.	Model	ML No.
GRD35	ML-052080	GRD35F	ML-126732
GRD45	ML-052081	GRD45F	ML-126735
GRD65	ML-052082	GRD65F	ML-126738
GRD85	ML-052306	GRD85F	ML-126741
GRC35	ML-052083	GRC35F	ML-126733
GRC45	ML-052084	GRC45F	ML-126736
GRC65	ML-052085	GRC65F	ML-126739
GRC85	ML-052307	GRC85F	ML-126742

SINGLE FLOOR MODEL FRYERS

Fryers with the Filter-Ready option installed, use the Mobile filter. For service information related to the Mobile filter, refer to F24599 MOBILE FILTERS.

A GRO Frymate (dump station) can be configured in a battery with fryers 15½ inches or 21 inches in width.

Model Designations

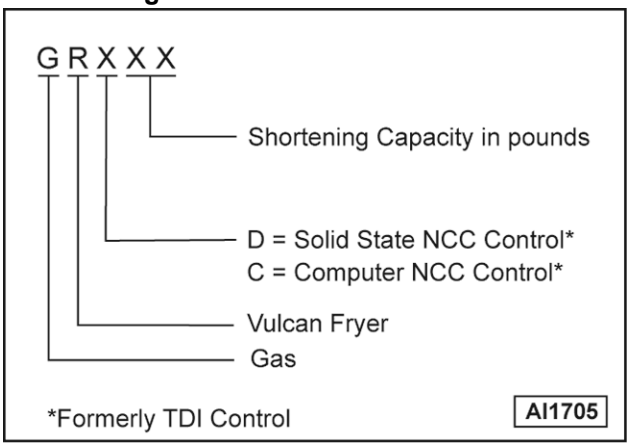

Fig. 1

Models, Features and Options

Model	Features					Options
	Fryer Width (inches)	Shortening Capacity (pounds)	Fry Tank	Cooking Control	Cook Timer (MM:SS)	Automatic Basket Lifts
GRD35	15½	35-40	Full	Solid State	0-99:59	Single or Dual
GRD45	15½	45-50	Full	Solid State	0-99:59	Single or Dual
GRD65	21	65-75	Full	Solid State	0-99:59	Single or Dual
GRD85	21	85-90	Full	Solid State	0-99:59	Single or Dual
GRC35	15½	35-40	Full	Computer	0-99:59	Single or Dual
GRC45	15½	45-50	Full	Computer	0-99:59	Single or Dual
GRC65	21	65-75	Full	Computer	0-99:59	Single or Dual
GRC85	21	85-90	Full	Computer	0-99:59	Single or Dual

Model	Features					Options
	Fryer Width (inches)	Shortening Capacity (pounds)	Fry Tank	Cooking Control	Cook Timer (MM:SS)	Automatic Basket Lifts
GRO15 (Frymate)	15½					
GRO21 (Frymate)	21					
GRO21S (Frymate)	21					

KLEENSCREEN FILTERING SYSTEM

The Kleenscreen filtering system is integrated into the GR Series fryer battery. The filter is housed in a pull-out drawer assembly at the base of the fryer. The filtering components in the drawer include a stainless steel filter tank, crumb-catch basket and a dual element mesh filter screen. With the filter drawer closed, a self-seating oil return line provides the path to return the filtered shortening to the fry tank.

This system is designed to provide a thorough and easy method to filter the shortening.

Some of the benefits include:

- Self-contained system eliminating the use of external filter equipment.
- Paperless filtering system.
- Easy to clean and low maintenance.

The fryer battery still utilizes many of the same components as the Vulcan GR series fryers.

Kleenscreen fryer batteries are available in a minimum of two and a maximum of four fryer sections. The fryer size of each section is identical.

A GRO Frymate (dump station) can also be included as one or more of the sections.

Model Designations

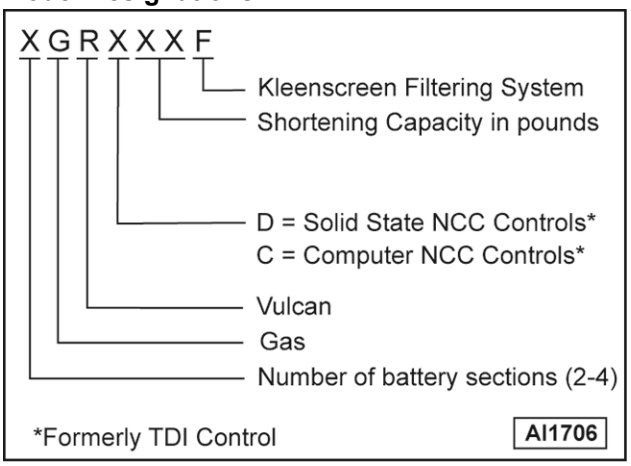

Fig. 2

Models, Features and Options

Model	Features						Options
	Fryer Width (inches)	Shortening Capacity (pounds)	Filter Pan Capacity (pounds)	Fry Tank	Cooking Control	Cook Timer (MM:SS)	Automatic Basket Lifts
2GRD35F[1]	31	35-40	80	Full	Solid State	0-99:59	Single or Dual
2GRD45F[1]	31	45-50	80	Full	Solid State	0-99:59	Single or Dual
2GRD65F[2]	42	65-75	130	Full	Solid State	0-99:59	Single or Dual
2GRD85F[2]	42	85-90	130	Full	Solid State	0-99:59	Single or Dual
2GRC35F[1]	31	35-40	80	Full	Computer	0-99:59	Single or Dual
2GRC45F[1]	31	45-50	80	Full	Computer	0-99:59	Single or Dual
2GRC65F[2]	42	65-75	130	Full	Computer	0-99:59	Single or Dual
2GRC85F[2]	42	85-90	130	Full	Computer	0-99:59	Single or Dual

Model	Features						Options
	Fryer Width (inches)	Shortening Capacity (pounds)	Filter Pan Capacity (pounds)	Fry Tank	Cooking Control	Cook Timer (MM:SS)	Automatic Basket Lifts
GRO15 (Frymate)	15½						
GRO21 (Frymate)	21						
GRO21S (Frymate)	21						
NOTES:	[1] For each additional fryer section, add 15½ inches to the width. [2] For each additional fryer section, add 21 inches to the width.						

CONTROL PANELS

Solid State with Filter Key

- Five product/programming keys: Left basket (up arrow); Right basket (down arrow); Temperature; Program (V); and Filter.
- Four digit display window that indicates fryer status, time left to cook, and actual or set point temperature.
- Two LED lamps that illuminate when a basket timer is being programmed, or blink when a timer is activated (left or right basket).
- Filter key to start pump motor and begin the filtering process after shortening is drained into filter pan.

SOLID STATE CONTROL, D MODEL

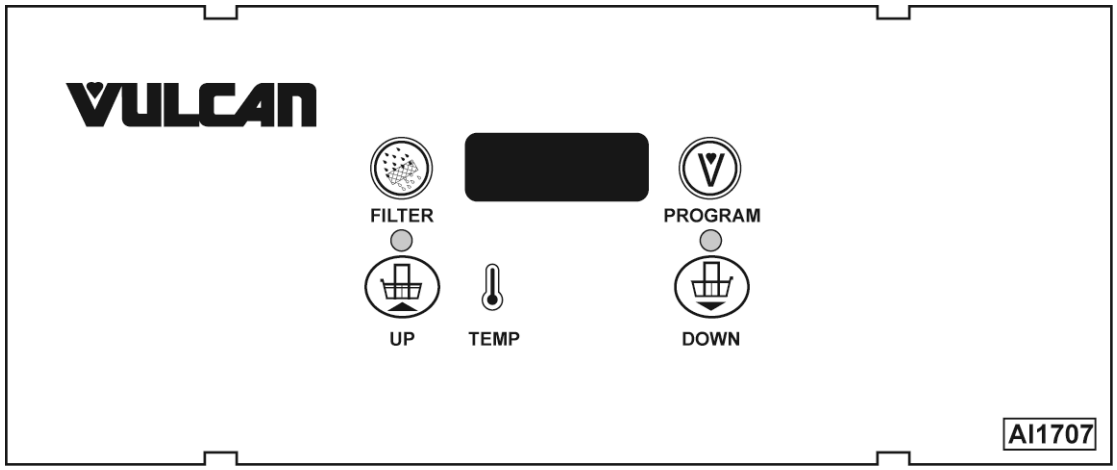

Fig. 3

Computer with Filter Key

- Fifteen product/programming keys allow individual product cooking times for up to ten different products: Product/Programming keys 1 through 0; Toggle; Filter; Left and Right basket selection keys; Oil Temp; Program key (V); and two arrow keys.
- Left and Right Basket Selection Keys - Select which basket lift to use with the product/ programming keys, and initiates the program cooking cycle (for units with or without basket lifts).
- Left and Right Arrow Keys - Used to initiate programming of time, and checking stored values (left 1-5 and right 6-0).

- Left and Right displays that indicate actual or set point temperature, remaining times, operating modes, and completion of preheat period.
- Two LED lamps on the Oil Temp key that indicate heat on and tem individual LED lamps above each of the ten product/programming keys? LED lamps blink when a product key is activated, and are solid when using a key for programming.
- Filter Key - Starts pump motor to circulate shortening through the filtering system.

COMPUTER CONTROL (OLDER), C MODEL

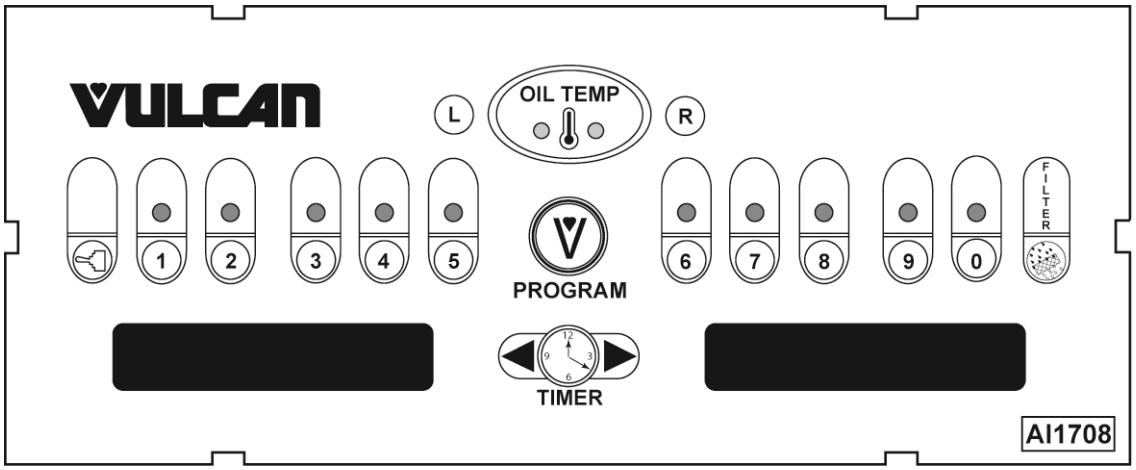

Fig. 4

COMPUTER CONTROL (NEWER), C MODEL

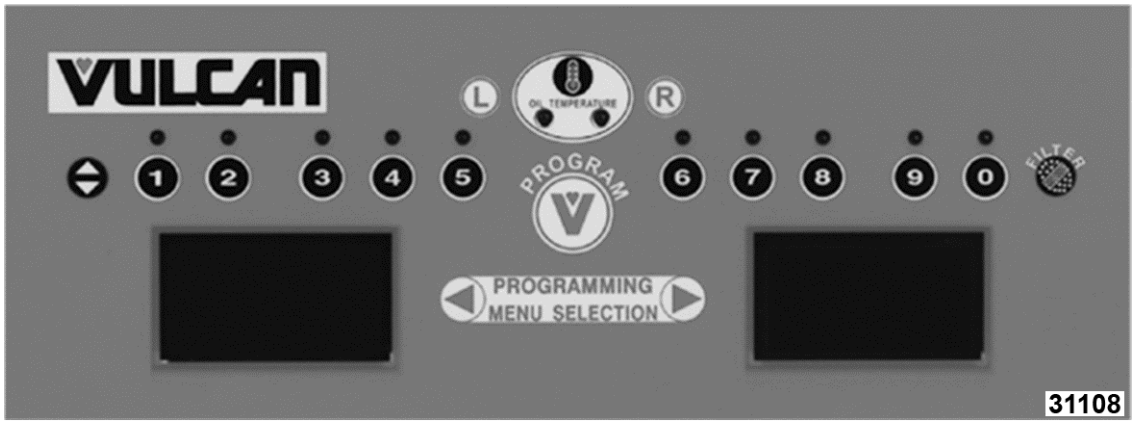

Fig. 5

SPECIFICATIONS

Electrical

- 120 VAC supply. A 24 VAC transformer provides power for the fryer controls, basket lift controls (if installed) , and the filtering controls on Kleenscreen battery fryers.

Gas Pressures

Manifold (per fryer section):

- Natural - 4" W.C.
- Propane - 10" W.C.

Binding supply pressure (min):

- Natural - 5" W.C. (7" W.C. battery units)
- Propane - 11" W.C. (12" W.C. battery units)

NOTE: Propane or Natural gases - 14" W.C. (max).

Input BTU Rating

GR Series	No. of Tubes	BTU/HR/ Section
GRD35, GRC35, GRD35F, GRC35F	3	90,000
GRD45, GRC45, GRD45F, GRC45F	4	120,000
GRD65, GRC65, GRD65F, GRC65F	5	150,000
GRD85, GRC85, GRD85F, GRC85F	5	150,000

TOOLS

Standard

- Standard set of hand tools.
- VOM with minimum of NFPA-70E CAT III 600V, UL/CSA/TUV listed. Sensitivity of at least 20,000 ohms per volt. Meter leads must also be rated at CAT III 600V.
- Clamp on type amp meter with minimum of NFPA-70E CAT III 600V, UL/CSA/TUV listed.
- Temperature tester (thermocouple type).
- ESD (Electrostatic discharge) Protection Kit.

Special

- Field service grounding kit P/N TL-84919.
- Loctite 242 P/N 520228 or equivalent.
- Burndy pin extraction tool RX2025 GE1; Newark Electronics Catalog Number 16F6666. Used for removing pin terminals on Burndy connectors.

REMOVAL AND REPLACEMENT OF PARTS

COVERS AND PANELS



⚠ WARNING Disconnect the electrical power to the machine and follow lockout / tagout procedures.

Control Panel

1. Remove screws at top of control panel, and rotate panel downward.

COMPUTER CONTROL, C MODEL



Fig. 6

2. Disconnect wiring harness, then lift off panel.

NOTE: The cooking control, control box, interface board, and wiring harness are now accessible.

3. Reverse procedure to install.

Basket Lift Covers



⚠ WARNING Shut off the gas before servicing the unit and follow lockout / tagout procedures.

⚠ WARNING All gas joints disturbed during servicing must be checked for leaks. Check with a soap and water solution (bubbles). Do not use an open flame.

NOTE: This procedure applies to fryers with automatic basket lift option only.

1. Remove basket assembly lift arms from support rods.
2. Remove screws securing upper cover to flue wrap.

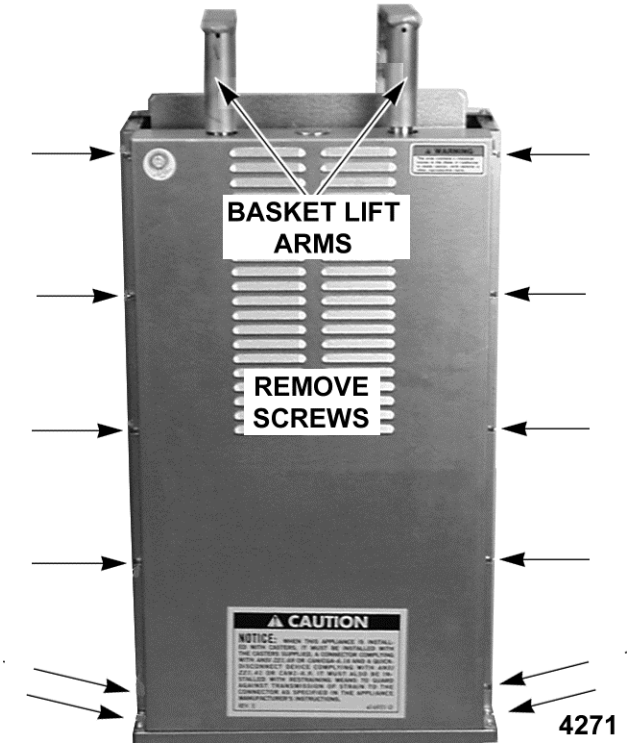

Fig. 7

   A. Lift upper cover over support rods, and place cover to the side.

3. Remove screws securing lower cover to motor mounting base.



Fig. 8

4. Reverse procedure to install.

COOKING CONTROLS



⚠ WARNING Disconnect the electrical power to the machine and follow lockout / tagout procedures.

CAUTION Certain components in this system are subject to damage by electrostatic discharge during field repairs. A field service ground kit is available to prevent damage. The field service grounding kit must be used any time the control board is handled.

1. Remove control panel as outlined under COVERS AND PANELS.
2. To remove:
   A. Solid State Control: Proceed to Step 3.
   B. Computer Control: Remove mounting nuts securing computer control and mounting panel to front control panel. Proceed to Step 4.

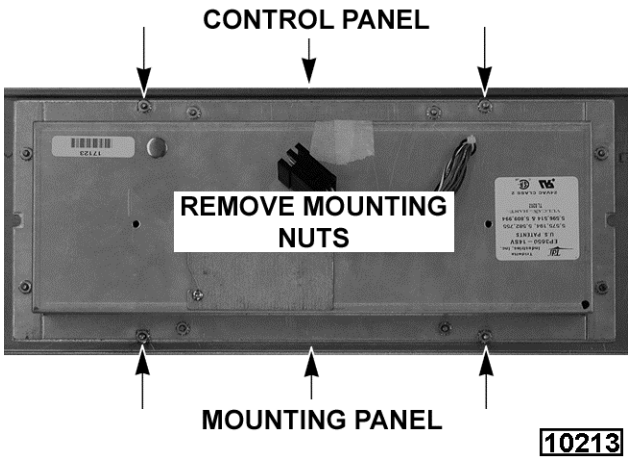

Fig. 9

3. Remove mounting nuts securing solid state control to mounting panel.

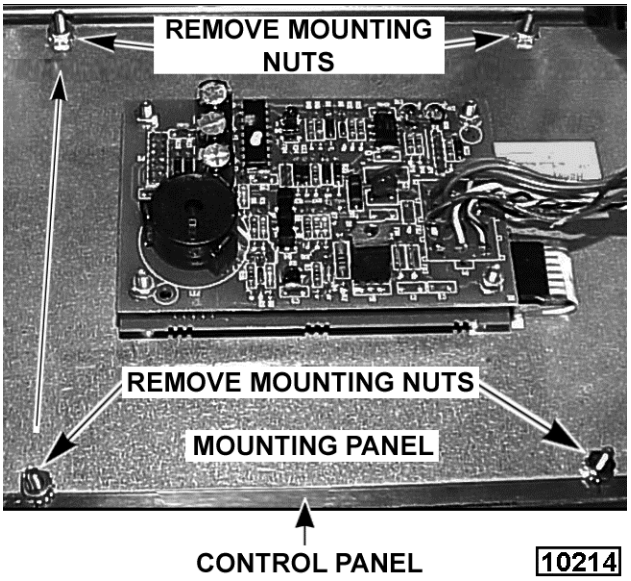

Fig. 10

4. Lift the control – with mounting panel attached – off the front control panel.
5. Reverse procedure to install, and check for proper operation.

NOTE: If a replacement control was installed, program the control with the customer's settings and products.

DISCARD VALVE SWITCH (KLEENSCREEN FRYERS ONLY)



⚠ WARNING Disconnect the electrical power to the machine and follow lockout / tagout procedures.

1. Open the fryer section doors above filter pan.
2. Pull out filter drawer, remove filter tank assembly, and push the tank support arms back into place under the fryer.
3. Remove bottom cover from base frame.

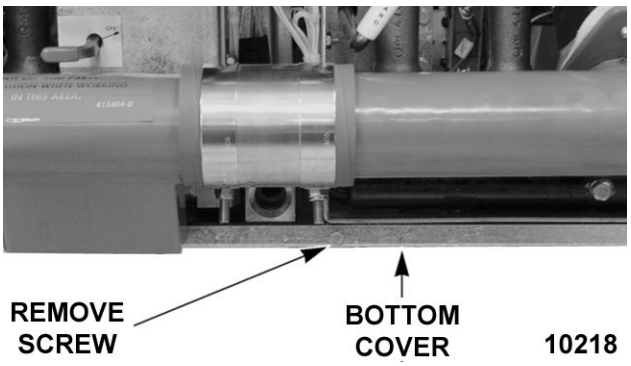

Fig. 11

4. From underneath the fryer:
   A. Disconnect the discard valve switch lead wire connector from power supply box.
   B. Remove switch mounting screws.

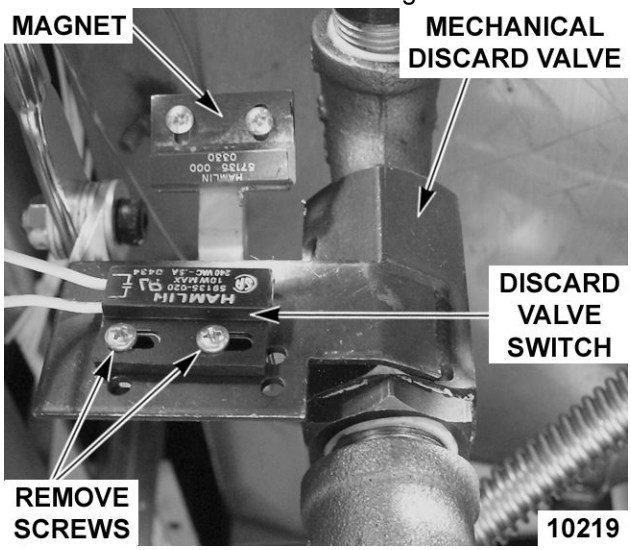

Fig. 12

5. Reverse procedure to install and check for proper operation.

GAS BURNERS



⚠ WARNING Disconnect the electrical power to the machine and follow lockout / tagout procedures.



⚠ WARNING Shut off the gas before servicing the unit and follow lockout / tagout procedures.

1. Open the door to the fryer section being serviced.
2. Remove gas burner shipping ties (if installed).



Fig. 13

3. On battery fryer sections only, remove drain pipe.

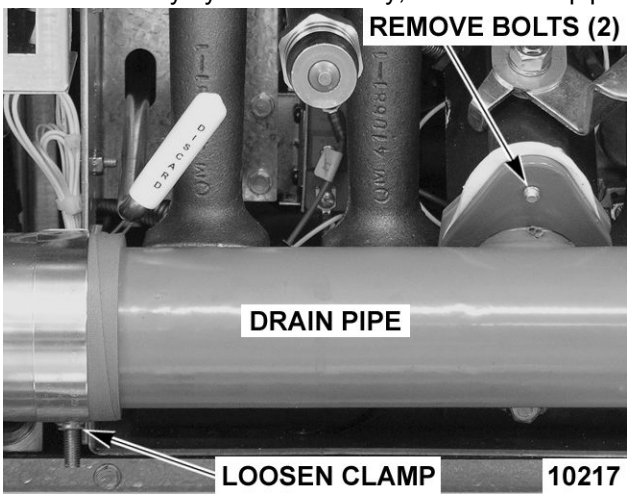

Fig. 14

NOTE: On fryers with gas valve arm extension, remove cotter pin securing handle to gas valve on/off knob adaptor, and remove extension arm bracket (as necessary) for right side burner removal clearance.

4. Lift gas burner up, and tilt the top of burner toward fryer until it clears the gas orifice at the bottom.

NOTE: The burners mount to the fryer's burner mounting bracket by shoulder bolts that rest in the keyway slot.

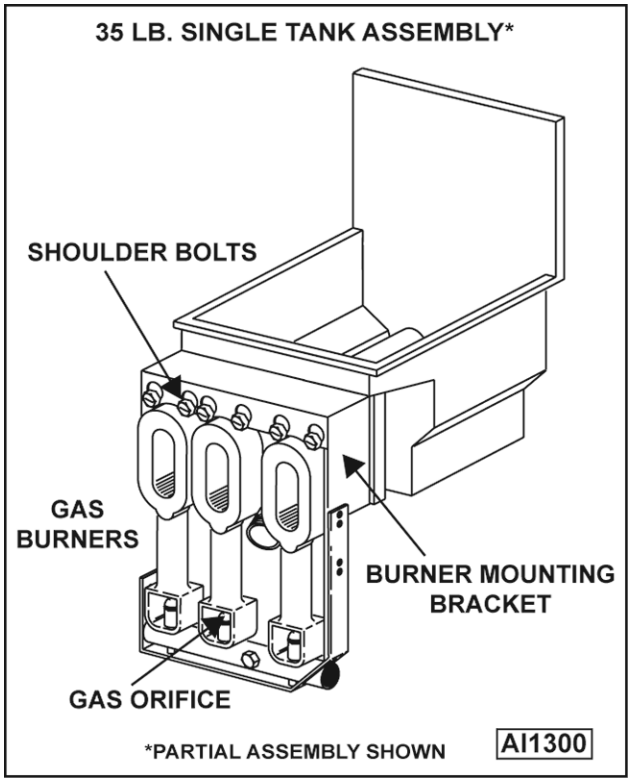

Fig. 15

5. Reverse procedure to install.

GAS ORIFICE



⚠ WARNING Disconnect the electrical power to the machine and follow lockout / tagout procedures.



⚠ WARNING Shut off the gas before servicing the unit and follow lockout / tagout procedures.

1. Remove gas orifice spud from orifice extension.

NOTE: The spud screws into the orifice extension. When installing, do not overtighten the spud, or damage to the threads may occur.

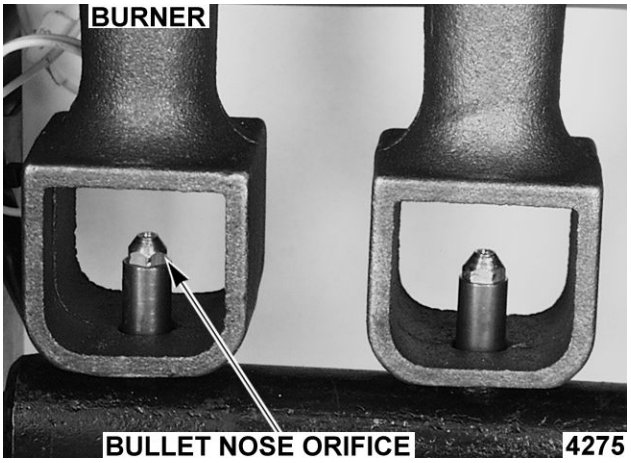

Fig. 16

2. Reverse procedure to install.

GAS COMBINATION VALVE



⚠ WARNING Disconnect the electrical power to the machine and follow lockout / tagout procedures.



⚠ WARNING Shut off the gas before servicing the unit and follow lockout / tagout procedures.

⚠ WARNING All gas joints disturbed during servicing must be checked for leaks. Check with a soap and water solution (bubbles). Do not use an open flame.

NOTE: If a gas combination valve is malfunctioning, do not attempt to disassemble the valve for repair. Install a replacement gas combination valve.

1. Remove burners as outlined in GAS BURNERS.
2. Disconnect lead wires from gas combination valve.
3. On fryers with gas valve arm extension only, remove cotter pin securing handle to gas valve on/off knob adaptor, and pull handle away from valve assembly.
4. Disconnect pilot tube from has combination valve.
5. Disconnect gas line fittings, then remove gas combination valve.

A. Remove gas line fittings from gas combination valve, and install (in same orientation) on the replacement valve.

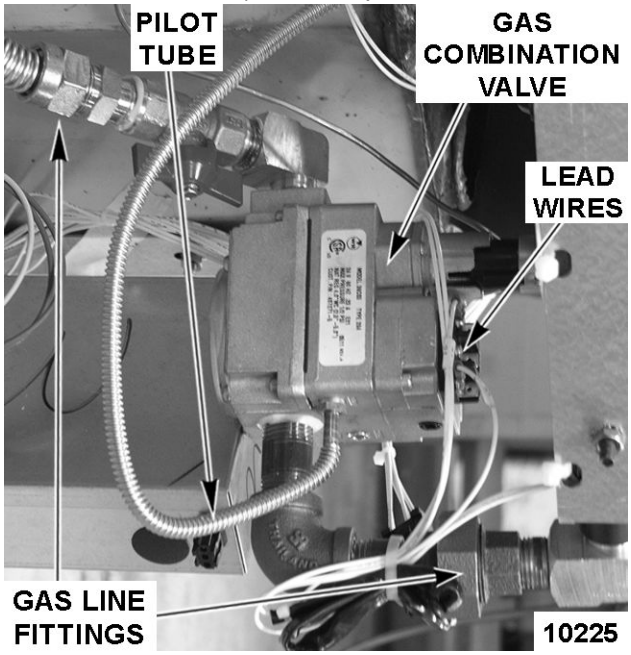

Fig. 17

6. Reverse procedure to install, and check for proper operations.

NOTE: Clean the pipe threads, and apply pipe joint compound to threads. Any pipe joint compound used must be resistant to the action of propane gases.

GAS PILOT



⚠ WARNING Disconnect the electrical power to the machine and follow lockout / tagout procedures.



⚠ WARNING Shut off the gas before servicing the unit and follow lockout / tagout procedures.

⚠ WARNING All gas joints disturbed during servicing must be checked for leaks. Check with a soap and water solution (bubbles). Do not use an open flame.

1. Remove pilot burner assembly and bracket from pilot bracket stand-off on the fry tank.

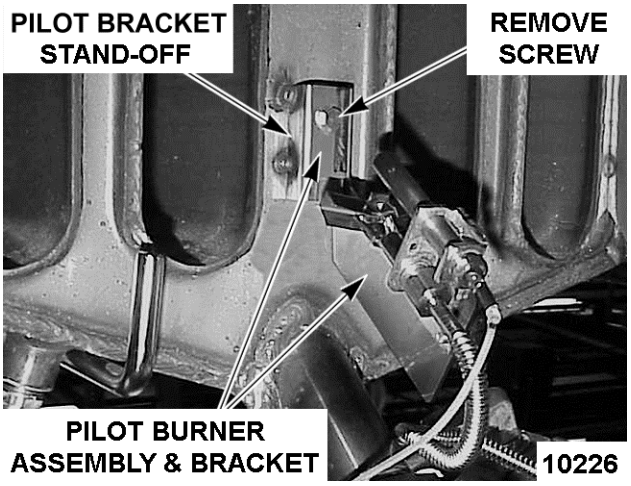

Fig. 18

2. Remove wire tie, and disconnect ignitor cable from ignitor/flame sense electrode on the gas pilot.

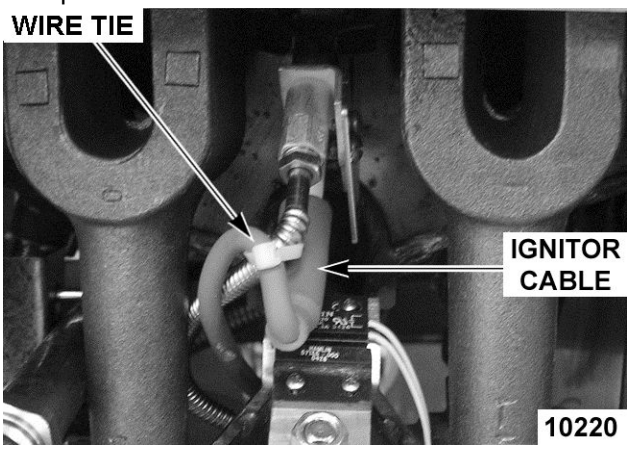

Fig. 19

NOTE: When installing, replace wire tie to secure ignitor cable.

3. Disconnect pilot tube from gas pilot.
4. Remove two screws securing gas pilot to mounting bracket.
   A. To remove gas orifice from pilot for inspection or cleaning, disconnect the gas orifice fitting from pilot body.

CAUTION If orifice is clogged with debris, clean with air or liquid only.

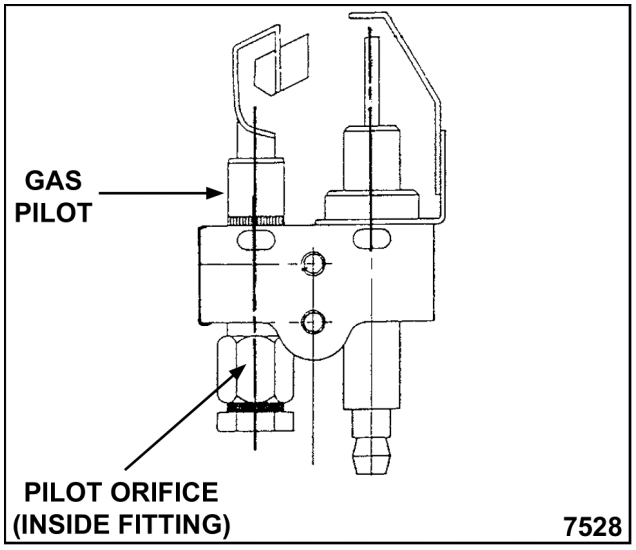

Fig. 20

5. Reverse procedure to install, and then check for proper operation.

TEMPERATURE PROBE



WARNING Disconnect the electrical power to the machine and follow lockout / tagout procedures.



WARNING Shut off the gas before servicing the unit and follow lockout / tagout procedures.

CAUTION Do not sharply bend and kink the temperature probe, or damage may occur.

1. Drain shortening from fryer tank.
2. Disconnect temperature probe and drain valve interlock (DVI) connector.



Fig. 21

NOTE: The connector has six pin positions, and is labeled G on the wiring diagram.

3. Remove the temperature probe lead wires from the 6-pin female connector.

Pin No.	Description
G-1	Probe
G-2	Empty
G-3	Probe
G-4	Empty
G-5	DVI Switch (24VAC) N.O. IN
G-6	DVI Switch (24VAC) OUT

4. Remove the burners as outlined under GAS BURNERS.
5. Remove the probe retaining and packing nuts.

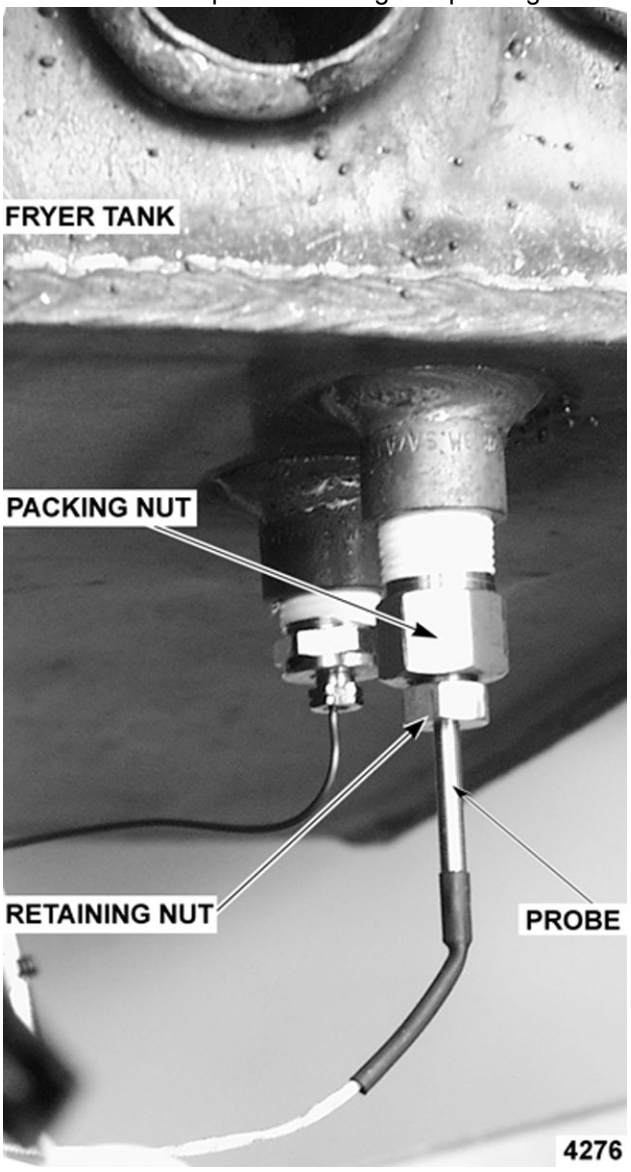

Fig. 22

6. Remove screws securing probe mounting clips and probe to the fryer heat tube (inside tank), then remove probe.

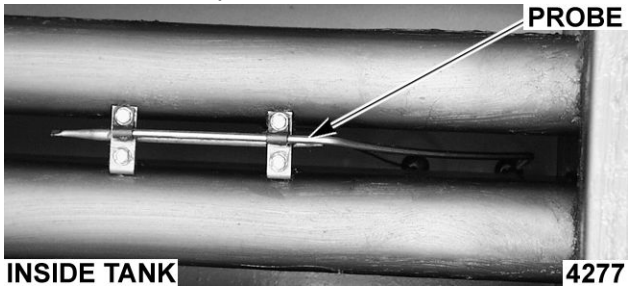

Fig. 23

7. Reverse procedure to install.
8. Check cooking controls calibration as outlined in COOKING CONTROL CALIBRATION.

HIGH LIMIT THERMOSTAT



⚠ WARNING Disconnect the electrical power to the machine and follow lockout / tagout procedures.



⚠ WARNING Shut off the gas before servicing the unit and follow lockout / tagout procedures.

CAUTION Do not sharply bend and kink the temperature probe, or damage may occur.

1. Drain shortening from fryer tank.
2. Remove burners as outlined under GAS BURNERS.
3. Disconnect lead wires from high limit thermostat.
4. Remove screws securing the high limit to mounting bracket.

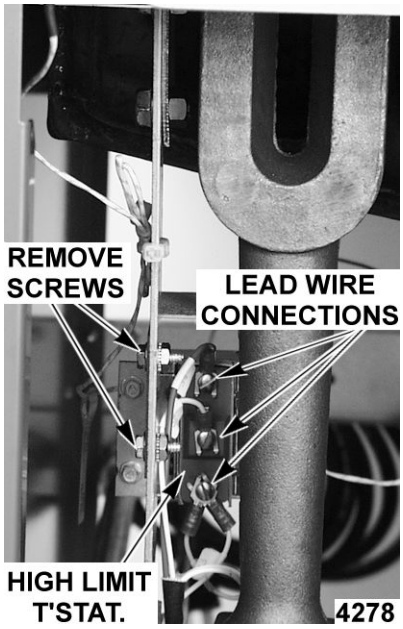

Fig. 24

5. Remove the capillary tube retaining and packing nuts.

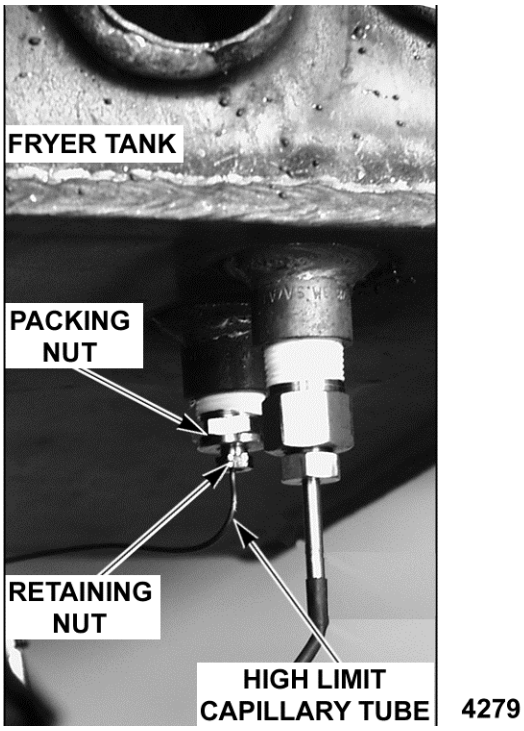

Fig. 25

6. Remove screws securing mounting clips and capillary tube to the fryer heat tube (inside tank), then remove capillary tube.

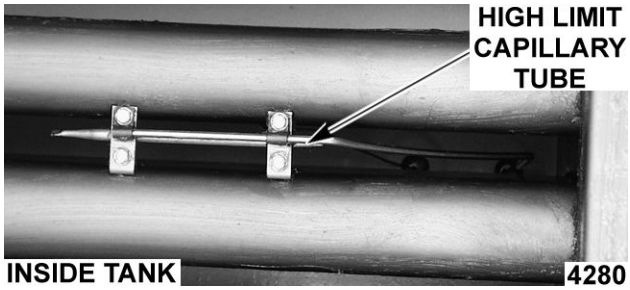

Fig. 26

7. Reverse procedure to install.

POWER SUPPLY BOX COMPONENTS



⚠ WARNING Disconnect the electrical power to the machine and follow lockout / tagout procedures.



⚠ WARNING Shut off the gas before servicing the unit and follow lockout / tagout procedures.

⚠ WARNING All gas joints disturbed during servicing must be checked for leaks. Check with a soap and water solution (bubbles). Do not use an open flame.

NOTE: The power supply box must be removed to access the following components: ignition control module, transformer, R1 pump motor relay, and R2 fill relay.

1. Remove burners as outlined under GAS BURNERS.
2. Remove wire tie, and disconnect ignitor cable from ignitor/flame sense electrode on the gas pilot.

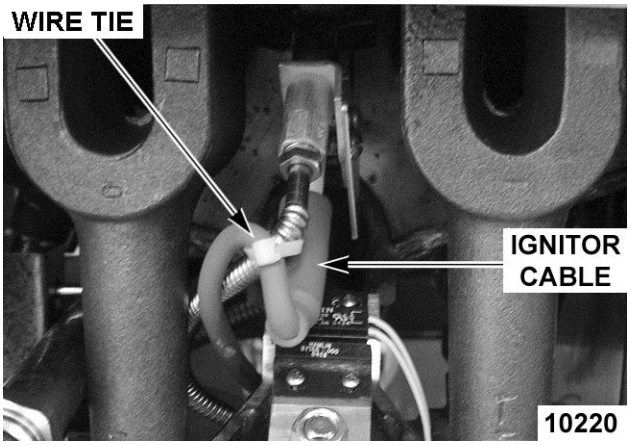

Fig. 27

NOTE: When installing, replace wire tie to secure ignitor cable.

3. Remove lower basket lift cover as outlined under COVERS AND PANELS.
4. Disconnect all wiring harness connectors and power cords from power supply box.
5. Remove screw securing power supply box to mounting bracket.

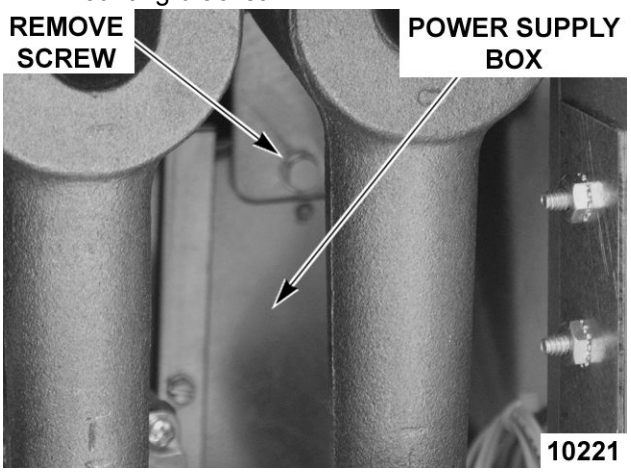

Fig. 28

NOTE: Power supply box is slotted at the rear, and secured by a hanging bracket (loose fit).

6. Remove cover from power supply box.

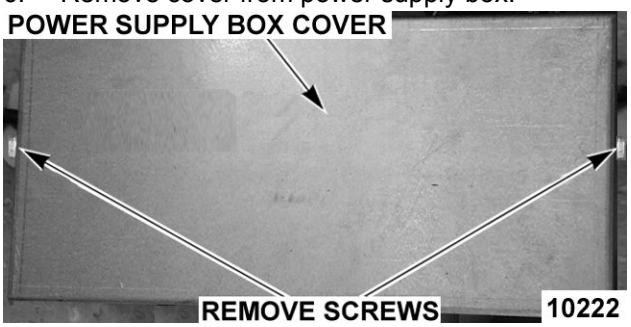

Fig. 29

7. Disconnect lead wires from the component being replaced, then remove from power supply box.

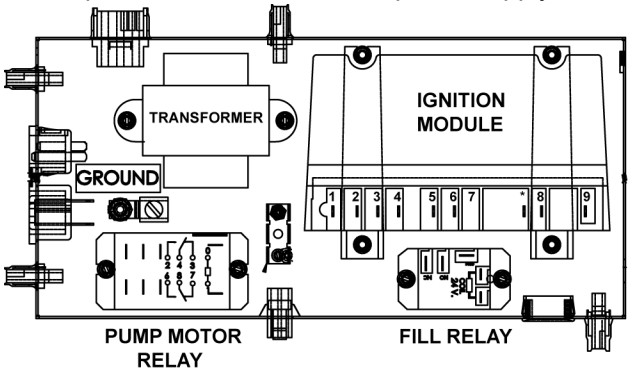

Fig. 30

8. Reverse procedure to install, and check for proper operation.

FILL SOLENOID VALVE (KLEENSCREEN FRYERS ONLY)



⚠ WARNING Disconnect the electrical power to the machine and follow lockout / tagout procedures.



⚠ WARNING Shut off the gas before servicing the unit and follow lockout / tagout procedures.

1. Open the fryer section doors above filter pan.
2. Pull out filter drawer, remove filter tank assembly, and push the tank support arms back into place under the fryer.
3. Remove bottom cover from base frame.

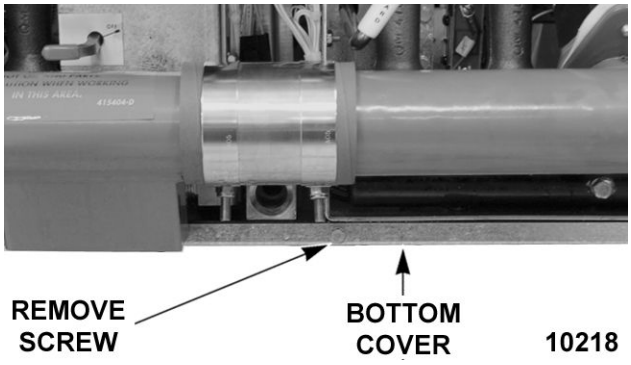

Fig. 31

4. Remove lower basket lift cover as outlined under COVERS AND PANELS.
5. Disconnect swivel pipe fitting at rear of fry tank.
6. Disconnect fill solenoid valve lead wire connector (4-pin) from power supply box.
7. Remove two screws securing the solenoid valve body flange to pipe tee, then remove the assembly from fryer.
   A. Remove pipe fittings from solenoid valve, and install on replacement valve.

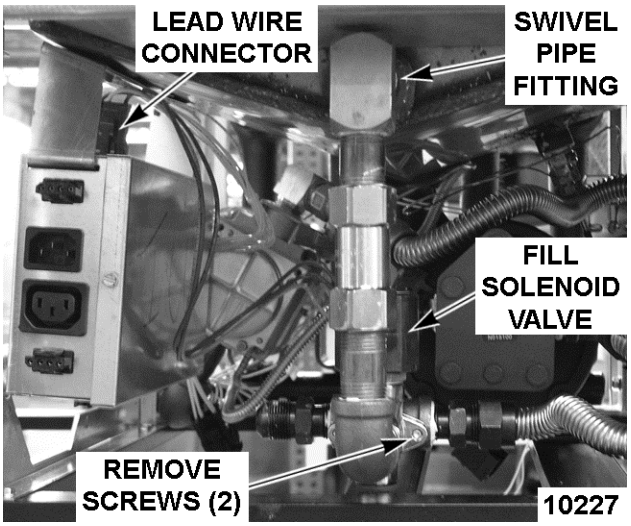

Fig. 32

8. Reverse procedure to install, and then check for proper operation.

BASKET LIFT TUBE



⚠ WARNING Disconnect the electrical power to the machine and follow lockout / tagout procedures.

1. Remove basket lift cover as outlined under COVERS AND PANELS.
2. Remove nut securing lift bar to the lift tube.
3. Remove screws securing lift tube bracket to fryer, then remove bracket and lift tube.

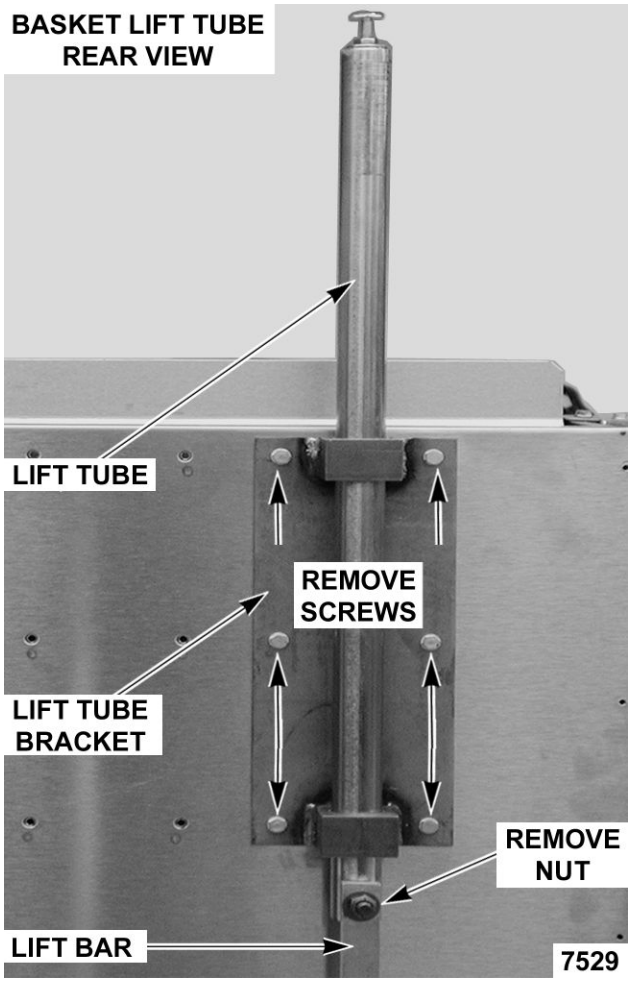

Fig. 33

4. Reverse procedure to install.

BASKET LIFT MOTOR



⚠ WARNING Disconnect the electrical power to the machine and follow lockout / tagout procedures.

1. Remove basket lift tube as outlined under BASKET LIFT TUBE.
2. Disconnect lead wires from cam switch and basket lift motor.
3. Loosen set screws securing crank arm assembly to the basket lift motor shaft.

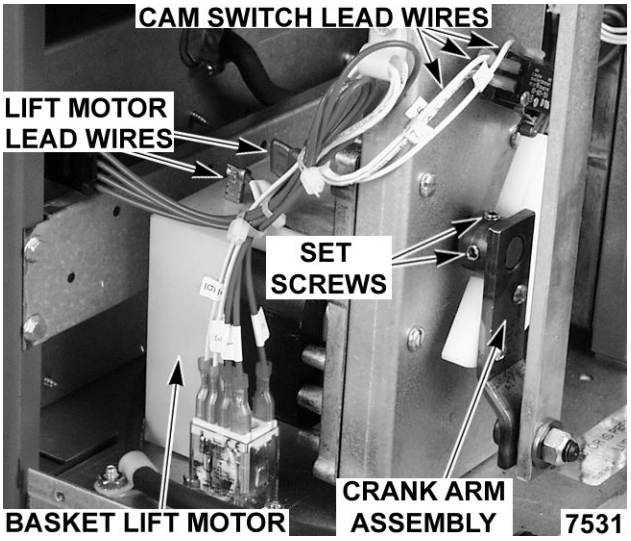

Fig. 34

4. Remove screws securing basket lift motor to cam bracket, then remove motor from bracket.
5. Reverse procedure to install, and then check for proper operation.

NOTE: After reinstalling motor, keep all wire leads clear from moving parts.

BASKET LIFT CAM SWITCH



⚠ WARNING Disconnect the electrical power to the machine and follow lockout / tagout procedures.

1. Remove basket lift tube as outlined under BASKET LIFT TUBE.
2. Disconnect lead wires from cam switch.
3. Remove screws securing cam switch to cam bracket.

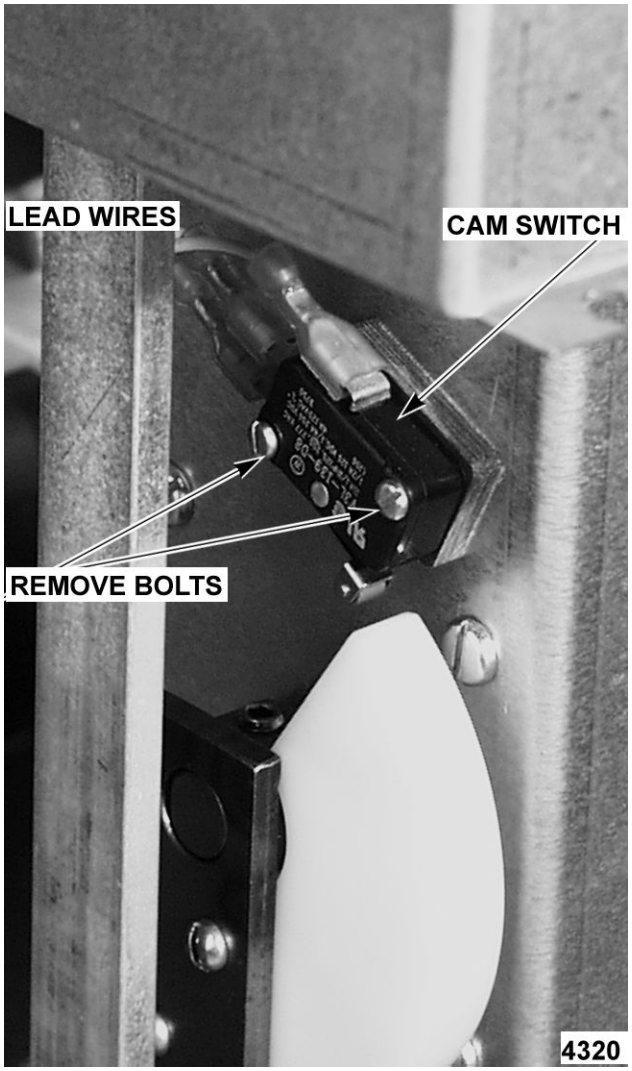

Fig. 35

4. Reverse procedure to install.

BASKET LIFT CAM



⚠ WARNING Disconnect the electrical power to the machine and follow lockout / tagout procedures.

1. Remove basket lift cover as outlined under COVERS AND PANELS.
2. Remove nut securing lift bar to cam assembly.
3. Loosen cam set screw.
4. Remove screw securing cam to the crank arm assembly.

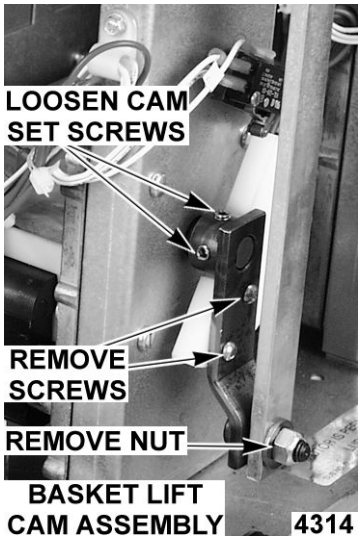

Fig. 36

5. Reverse procedure to install.

PUMP AND MOTOR (KLEENSCREEN FRYERS ONLY)



⚠ WARNING Disconnect the electrical power to the machine and follow lockout / tagout procedures.

1. Open the fryer section doors above the filter tank drawer.
2. Pull out filter drawer, remove filter tank assembly, and push the tank support arms back into place under the fryer.
3. Remove bottom cover from base frame.

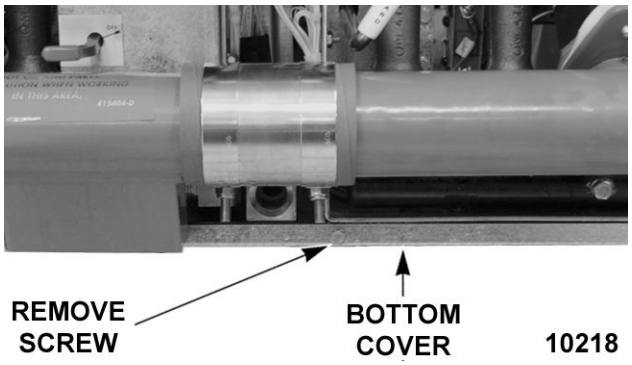

Fig. 37

4. Disconnect pump motor lead wire connector (2-pin).
5. From underneath the fryer:
   A. Disconnect flexible line fittings from pump inlet and from pipe tee in pump outlet line.

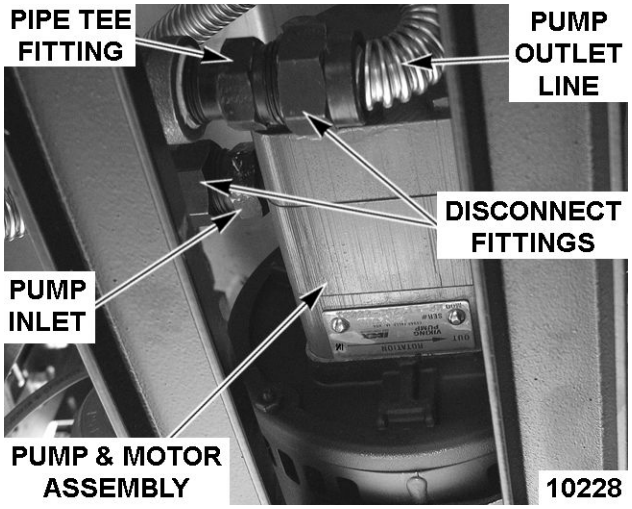

Fig. 38

6. Remove pump motor assembly from fryer.
   A. Remove pipe fittings from the pump, and install on replacement pump and motor assembly.
7. Reverse procedure to install.

NOTE: When installing, ensure the rubber vibration pad or grommets are installed under the motor mounting plate.

FRY TANK ASSEMBLY



⚠ WARNING Disconnect the electrical power to the machine and follow lockout / tagout procedures.



⚠ WARNING Shut off the gas before servicing the unit and follow lockout / tagout procedures.

⚠ WARNING All gas joints disturbed during servicing must be checked for leaks. Check with a soap and water solution (bubbles). Do not use an open flame.

1. Drain shortening from fryer tank.
2. Disconnect the gas supply line to allow access to fryer from all sides.
3. Remove fryer baskets, crumb screen and basket hanger.

NOTE: If the fryer is equipped with automatic basket lifts, remove lift arms from the support rods before fry tank removal.

NOTE: If the fryer is a battery section, remove grease strip, and split the silicone seal between the fryer section tanks with utility knife.

4. On battery fryer sections only, remove bolts securing the drain pipe flange to the manual drain valve.

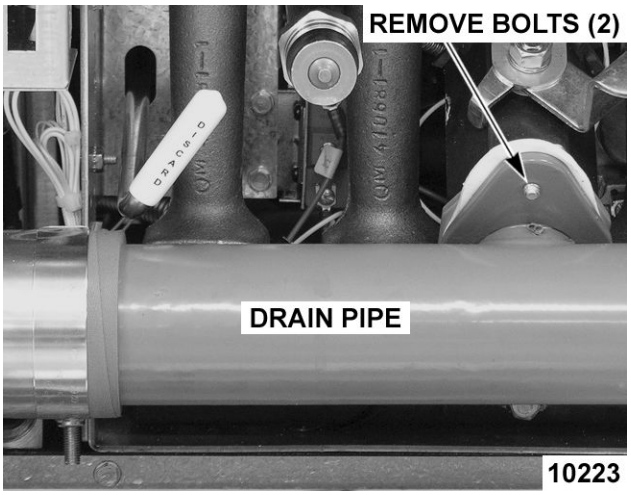

Fig. 39

5. Disconnect temperature probe and drain valve interlock switch (DVI) connector (6-pin).

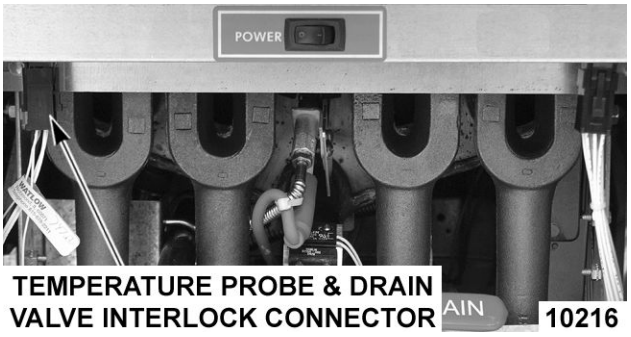

Fig. 40

6. Remove power supply box as outlined under POWER SUPPLY BOX.
7. On battery fryer sections only, remove bottom cover from base frame.

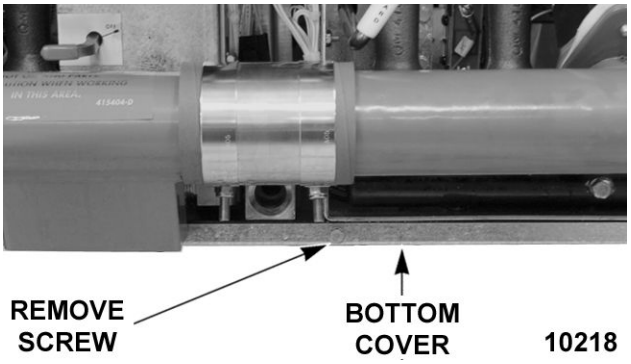

Fig. 41

8. Remove gas manifold and frame assembly from the fryer's base frame:
   A. For the fryer sections above the filter drawer assembly on battery fryers or single floor model fryers, remove mounting nuts securing gas manifold and frame assembly to the fryer's base frame.
   B. For all other fryer sections in a battery only, remove mounting nuts securing gas manifold and frame assembly to the V-shaped frame support bracket.

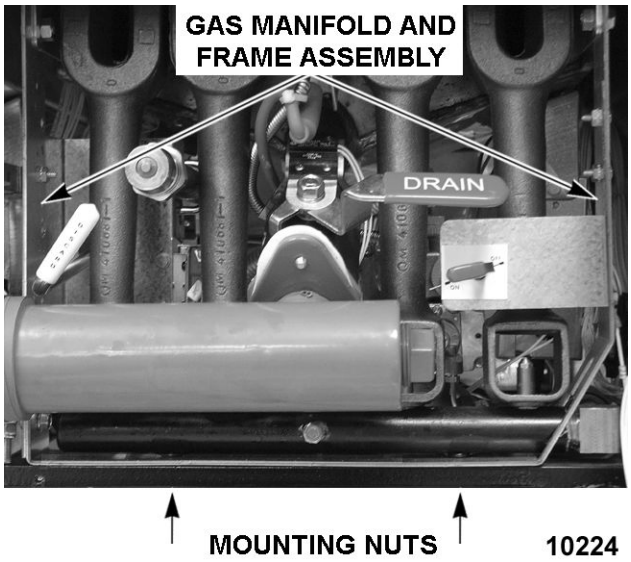

Fig. 42

9. Remove lower basket lift cover as outlined under COVERS AND PANELS.
10. Disconnect swivel fitting from fry tank at the rear (shortening line inlet to fry tank).
11. Disconnect flexible gas line fitting at manual shutoff valve (gas supply inlet to valve).
12. Remove screws securing the top of fry tank to the flue wrap.

NOTE: Remove wire ties securing lead wires and wiring harnesses as necessary before removing fry tank and when removing components from fry tank for reuse.

13. Grasp the fry tank at the top (by flue) and front lip, then lift fry tank assembly from the fryer body. Place the assembly on floor or table for removal of components.
14. Remove gas pilot as outlined under GAS PILOT.
15. Remove temperature probe as outlined under TEMPERATURE PROBE.
16. Remove high limit thermostat as outlined under HIGH LIMIT THERMOSTAT.
17. On battery fryer sections only, when removing fry tank from sections with the mechanical discard valve:
   A. Loosen U-bolt securing discard pipe with male quick disconnect fitting to the mounting bracket.
   B. Remove pipe from elbow on mechanical discard valve.
18. Remove bolts securing gas manifold and frame assembly to the fry tank.
19. Pull the gas manifold assembly from fry tank.
20. Disconnect drain valve interlock switch (DVI) connector (2-pin), and remove manual drain valve.
21. Remove screws securing flue box to fry tank, then remove flue box.
22. Reverse procedure to install all the parts removed from original fry tank onto replacement fry tank, then install the assembly.

SERVICE PROCEDURES AND ADJUSTMENTS

TEMPERATURE PROBE TEST

The temperature probe is used for both the solid state control and the computer control. The probe is an RTD (resistance temperature detector) of the thermistor type. As temperature increases, the resistance value decreases.

Probe Fault

If a temperature probe fault or high temperature condition occurs, a fault message will be displayed and the electronic alarm will sound continuously. The heat demand and basket lift outputs are deactivated. If a cooking cycle is in process (timer active), it will be canceled, and the key pad disabled.

This will continue until the fault clears, power is cycled or problem resolved.

Control Type	Display Message
Solid State	An open will display "Prob," and a short or high temperature condition will display "HI."
Computer	An open will display "PROBE OPEN," and a short of high temperature condition will display "PROBE SHORT."

To Check:

1. Turn off power switch.
2. Disconnect the temperature probe and the drain valve interlock (DVI) connector.

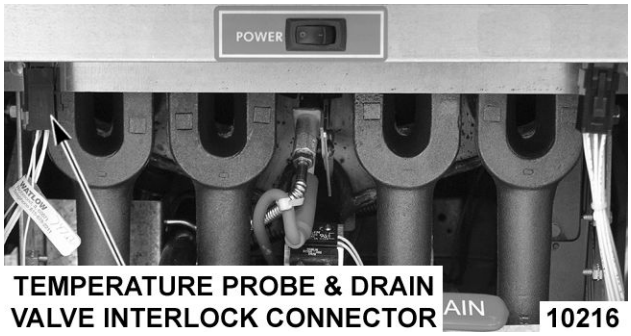

TEMPERATURE PROBE & DRAIN VALVE INTERLOCK CONNECTOR **10216**

Fig. 43

NOTE: The connector as six pin positions, and is labeled G on the wiring diagram.

3. Test the probe using a VOM to measure resistance. Connect the meter leads to pins 3 and 4 on the male connector.
   A. If the measured resistance values are within the allowable range, the probe is functioning properly. Reverse procedure to install.
   B. If the measured resistance values are outside the allowable range, install a replacement probe, and check for proper operation.

Temperature (°F)	Resistance (Ω)
77	90,000-110,000
350	604-836
415[1]	302-369
460[2]	191-233

NOTE:
[1] High temperature alarm level for the cooking controls.
[2] Shorted probe equivalent temperature.

COOKING CONTROL CALIBRATION

NOTE: Verify condition of temperature probe as outlined under TEMPERATURE PROBE TEST before proceeding.

1. Check the level of shortening in fry tank. The level must be between the MIN and MAX fill lines before proceeding.
2. Allow shortening to cool below 300°F.
3. Place a thermocouple in the geometric center of the fry tank, 1 inch below the shortening surface.
4. Set the cooking control to 350°F, and turn on the fryer.
5. Monitor the heat indicator lamp. When cooking control is calling for heat, lamp will be on. If cooking control is satisfied, lamp will be off.

   Solid State Control – Decimal point of first character indicates heat on when lit.

   Computer Control – Two LED lamps on the Oil Temp key indicate heat on when lit.

NOTE: Agitate the shortening to eliminate any cold zones.

   A. Allow cooking control to cycle three times to stabilize shortening temperature.

B. Record meter reading from thermocouple when the cooking control cycles off and on for at least two complete heating cycles.

6. Calculate the average temperature by adding the temperature reading when the heat lamp goes off to the temperature reading when the heat lamp comes on, then dividing the sum by 2.

   [Temp (lamp off) + Temp. (lamp on)] ÷ 2 = Average Temp.

   Example: (360 + 340) ÷ 2 = 700 ÷ 2 = 350°F

   The average temperature should be 350°F (±5°F).

   A. If the average temperature reading is within tolerance, cooking control is properly calibrated.

   B. If the average temperature reading is out of tolerance, perform the following:

      1) Solid State Control – Adjust the offset temperature accordingly, as outlined in SOLID STATE CONTROL.

      2) Computer Control – Adjust the offset temperature accordingly, as outlined in COMPUTER CONTROL - OLDER CONTROLS.

7. Repeat the average temperature calculation for up to three attempts. Allow the cooking control to cycle at least two times between adjustments, before performing the calculation

8. If calibration is unsuccessful, the cooking control may be malfunctioning and cannot be adjusted properly. Install a replacement cooking control and check calibration.

ELECTRONIC IGNITION SYSTEM

Operation

When the main power switch is turned on, the ignition control module is energized with 24 volts between terminals 5 and 6.

An output of 24 volts is sent from terminals 2 and 3 to the pilot coil on the combination valve, allowing gas flow to the pilot; and spark voltage is sent from terminal 9 to begin sparking at the ignitor/flame sense electrode. The sparking will continue until an adequate pilot flame is sensed, or for a maximum of 90 seconds.

If pilot ignition is not established within the first several seconds of ignition trial time, the cooking control displays a message indicating pilot out or ignition failure as the ignition module continues to generate a spark at the ignitor/flame sense electrode.

If pilot is not established within the 90 second ignition trial time, the ignition module locks out power to the gas valve. A message is displayed by the control indicating ignition lockout; keypad is disabled, and the electronic alarm will sound continuously.

The system remains locked out until the power switch is cycled to reset the system and re-start the ignition trial cycle.

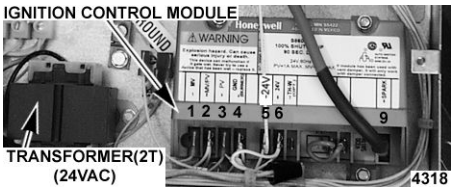

Fig. 44

Once the pilot flame is confirmed, a 24 volt output from terminal 1 will provide the ignition status input signal to the cooking control. When the cooking control calls for heat, the heat output is activated, and power is applied to the heat control Triac on the Control Interface Board. With the Triac powered, the main valve coil on the combination valve is then energized, allowing gas flow to the burners.

Terminal	Description
1	MV (main voltage) - 24VAC output will be present, provided the ignitor/flame sense electrode is sensing an adequate pilot flame.
2	MV/PV (common).
3	PV (pilot voltage) - 24VAC output will be present after the ignition module is powered. The voltage will remain present, provided an adequate pilot flame is sensed. If the pilot flame is not sensed within the ignition trial time, the ignition module locks out, which removes the output voltage.
4	Burner ground.
5	24VAC ground.
6	24VAC hot (input).
9	Spark voltage output to ignitor/flame sense electrode; and for pilot flame current rectification.

FLAME SENSE CURRENT CHECK

1. Turn off the power switch.

2. Access the ignition control module in the power supply box.
3. Remove the jumper wire between terminals marked with an asterisk (*) and an 8.

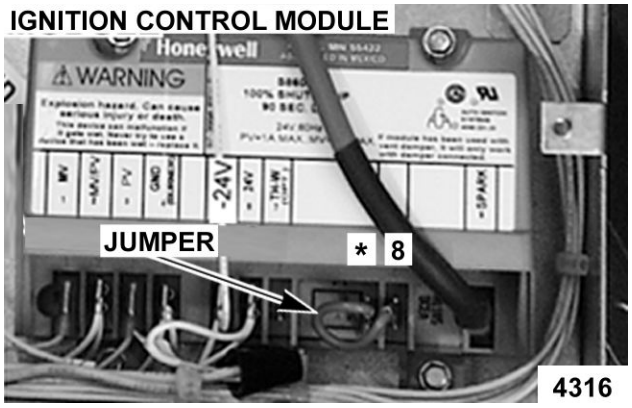

Fig. 45

4. Set VOM to micro amp scale (DC), and connect meter leads at the same terminals. Negative (-) meter lead to the asterisk (*) terminal, and positive meter lead to terminal 8.
5. Turn on power switch, and set cooking control to call for heat.
6. Meter reading should be above 1.0 micro amp (minimum) and steady.
   A. If reading is greater than or equal to the value given, then flame sense current is within tolerance.
      1) Turn off power switch and replace jumper wire.
   B. If reading is less than the value given, turn off power switch and replace jumper wire.
      1) Perform ELECTRONIC IGNITION CONTROL TEST.

ELECTRONIC IGNITION CONTROL TEST

If the ignition control module is not generating a spark to ignite gas pilot, perform the following checks.

1. Turn on the power switch, and verify the ignition control module is receiving power from the transformer.
   A. If 24VAC is present between terminals 5 and 6 on the ignition control module, then module is receiving power. Turn off the power switch, and continue with procedure.
   B. If 24VAC is not present, then find the source of the problem.
2. Disconnect power to the machine.



⚠ WARNING Shut off the gas before servicing the unit and follow lockout / tagout procedures.

⚠ WARNING All gas joints disturbed during servicing must be checked for leaks. Check with a soap and water solution (bubbles). Do not use an open flame.

3. Verify all electrical connections on the ignition control module are secure.
4. Verify the ground wire connections on the ignition control module and the gas pilot mounting bracket are clean and secure. The gas pilot should have good metal to metal contact to the pilot mounting bracket on the fryer.
5. Remove the gas pilot and check the following:
   A. Inspect the ceramic insulator on the ignitor/flame sense electrode for cracks or evidence of exposure to extreme heat, which can permit leakage to ground. If either of these conditions exist, install a replacement gas pilot.
   B. Inspect the ignitor electrode and ground clip for contaminates or corrosion. Clean those surfaces as necessary.
   C. The gap between the ignitor/flame sense electrode and the ground clip should be 1/8 inch. If the gap is outside of this dimension, bend the ground clip as necessary, to make the adjustment.

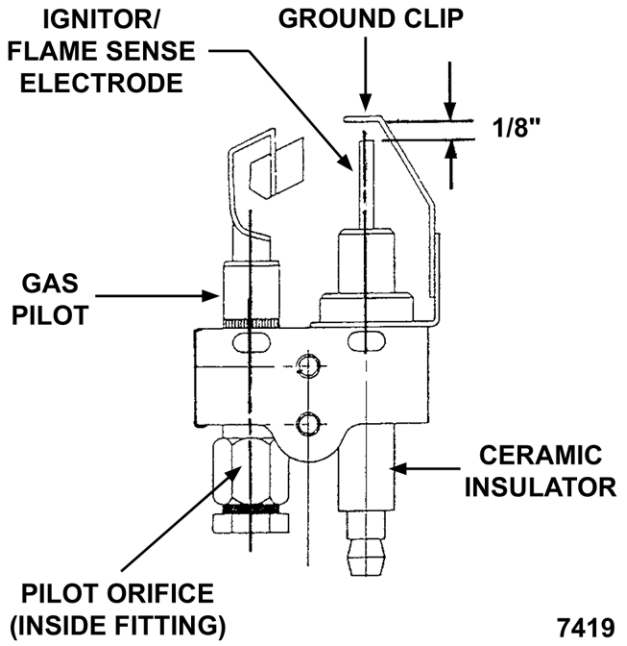

Fig. 46

D. Check the ignitor cable connection for tightness and damaged insulation. If the ignitor cable appears to be damaged, install a replacement ignitor cable.

6. With gas pilot installed and the ignitor cable connected, reconnect power and turn on the gas supply.

7. Turn on power switch, and observe spark from ignitor.

   A. If spark from ignitor is present and ignites the gas for the pilot, and the burners light, the system is working properly.

   B. If gas pilot lights but does not maintain an adequate flame during the trial for ignition (90 seconds), check pilot orifice for clogging.

CAUTION If orifice is clogged with debris, clean with air or liquid only.

   C. If spark from ignitor is present but does not ignite pilot gas before the ignition control module locks out, there may not be enough gas in the line for ignition.

      Turn off the power switch to reset the module. Wait 5 minutes between ignition tries for unburned gas to vent. Turn on the power switch. Sparking should resume to ignite pilot. The module may need to be reset several times before ignition takes place.

   D. If ignitor is still not sparking, turn off the power switch, disconnect power, and turn off the gas supply.

8. Install a replacement ignition control module, and check for proper operation.

GAS MANIFOLD PRESSURE ADJUSTMENT



⚠ WARNING Disconnect the electrical power to the machine and follow lockout / tagout procedures.



⚠ WARNING Shut off the gas before servicing the unit and follow lockout / tagout procedures.

1. Open the door(s), and turn off the gas combination valve.

2. To measure the manifold pressure, remove the 1/8-inch NPT plug (pressure tap) on the outlet side of the valve, and attach a manometer.

NOTE: Gas manifold pressure can also be measured at the pressure tap in the manifold.

3. Turn on the gas supply, the gas combination valve, and the power switch.

   A. Verify burners light.

4. Observe the manometer pressure reading, and compare to the pressure chart near the end of this procedure.

   A. If other appliances are connected to the same gas line, turn them all on and check manometer pressure again. If a pressure drop of 1/2 inch water column or more is observed, then the gas supply needs to be checked by the gas line installer or the local gas company for adequate sizing.

   B. If adjustment is necessary, continue with procedure.

5. Remove the adjustment screw cap to access the pressure adjustment screw.

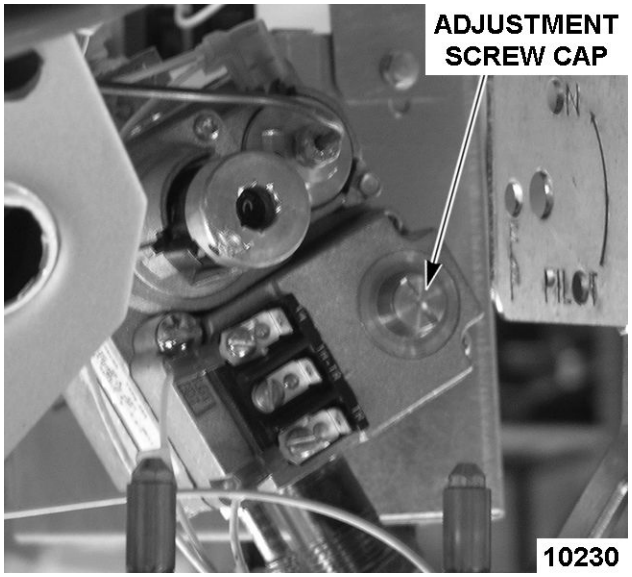

Fig. 47

A. To increase pressure, turn the screw clockwise. To decrease pressure, turn the screw counterclockwise.

NOTE: Accurate gas pressure adjustments can be made only with the gas on and burner lit.

6. Set the pressure as outlined below:

Gas Type	Pressure Readings (inches W.C.)			
	Manifold	Line		
		Recommended	Min	Max
Natural	4	7	5	14
Propane	10	11	11	

NOTE: If the incoming line pressure is less than the minimum stated, then the manifold pressure cannot be set correctly.

7. Once the correct pressure has been set, turn off the power switch, and replace the adjustment screw cap and 1/8-inch NPT plug (pressure tap) on the outlet side of the valve.

8. Check for proper operation.

BASKET LIFT ARM ADJUSTMENT

1. With shortening at room temperature, verify the shortening level is between MIN and MAX lines in fry tank. Add shortening as needed.

NOTE: Shortening will expand when heated. Do not fill the fry tank past the MAX line.

2. Turn on power switch, and set temperature to 350°F. Allow the shortening to reach set temperature.

3. Check basket lift operation.

   A. If necessary, adjust as outlined below

4. When basket is in the up position, the bottom of the basket should be out of the shortening. When basket is in the down position, the bottom of the basket should clear the crumb screen, and the product should be submerged.

   A. To adjust, remove basket arm from lift shaft, loosen stop nut, and turn height adjustment bolt to raise or lower basket arm as required. Both baskets should be same height.

   B. Tighten stop nut when complete.

NOTE: If adjustment is too low, when the basket is lowered, it will disengage from basket arm.



Fig. 48

SOLID STATE CONTROL

Operation

Refer to the Installation & Operations manual for specific operating instructions.

Error Messages

For information on solid state control error messages, refer to SOLID STATE CONTROL under TROUBLESHOOTING.

Programming

The solid state control's programming mode is used to set the control's operational parameters.

NOTE: If a product key is active (timing), programming mode cannot be entered.

1. Press V key to enter Program Mode.

   If the Parameter Lock feature is disabled, Program Mode entry is immediate. If the Parameter Lock feature is enabled "LoC" will be displayed.

   Use the following key sequence (password) to enter Program Mode: Left basket/up; Left basket/up; Right basket/down; Right basket/down.

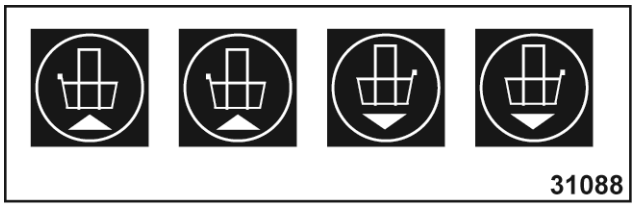

Fig. 49

NOTE: If the proper key sequence is not entered within 6 seconds, the controller exits Program Mode.

2. Beeper chirps on each successful key press. If a key is not pressed within 2 minutes, the control will automatically exit programming.
3. To scroll through each of the Program items, press V and release.
4. To exit Program Mode at any time, press V and hold for 1 second.

Program Item	Key Sequence	Display[4]
Left Timer	• Press Left Basket to increase, or Right Basket to decrease cook time.[1]	LED above left basket is on. **15:00** time value with flashing colon (MM:SS).
Right Timer	• Press Left Basket to increase, or Right Basket to decrease cook time.[1]	LED above right basket is on. **15:00** time value with flashing colon (MM:SS).
Set Point Temperature	• Press Left Basket to increase, or Right Basket to decrease set point temperature.[2]	**340F** or 171C Current set point with flashing F or C.
Calibration Offset	• Press Left Basket to increase, or Right Basket to decrease offset temperature (range -20 to +20).[2]	**00F** or -00F Always in °F.
Melt Options	• Press Left Basket or Right Basket to scroll through Melt Options.	CY **S** CY L = Liquid. CY S = Solid. CY 0 = No.
Energy Source	• Press Left Basket or Right Basket to select the fryer's energy source, electric or gas heat.	**ELEC** or gAS
Parameter Lock	• Press Left Basket or Right Basket to select desired Parameter Lock condition.[3]	**Uloc** or LoC Selected parameter is enabled if flashing.
Degrees F or C	• Press Left Basket or Right Basket to select desired Temperature scale.	F or C
NOTES:	**[1] Time will change in 1-second increments, accelerating if the button is held.** **[2] Temperature will change in 1-degree increments, accelerating if the button is held.** **[3] Selecting Parameter Lock enabled will take effect on the next Program Mode entry.** **[4] Default value shown in bold.**	

COMPUTER CONTROL - OLDER CONTROLS

Operation

Refer to Installation & Operations manual for specific operating instructions.

Service Programming

The computer control's Service Programming mode is used to perform system diagnostic tests or to edit program items that affect the fryer's operation.

NOTE: If a product key is active (timing), Service Programming cannot be entered.

Error Messages

For information on computer control error messages, refer to COMPUTER CONTROL under TROUBLESHOOTING.

Enter Service Mode

1. Press V key, and enter password (default: 1972). Use product key numbers (1 though 0) to enter values.
   A. "SERVICE" is displayed in the left window, and the LED lamps above the product keys 1, 2, 4, 5, 6, 7, and 8 come on.
   B. Beeper chirps on each successful key press. If a key is not pressed within 2 minutes, the computer will automatically exit Service Programming (except in diagnostic mode).
2. To exit a Program item after making a selection, press V to accept and return to Service Programming.
3. To exit Service Programming and return to operation mode, press V key twice.

Program Item	Key Sequence	LED Status		Display[8]	
		ON	OFF	Left	Right
Temperature Offset	• Press 1 to view offset temperature. To edit, enter the desired offset temperature (range 0 to 20°F).		all	OFF **00** F	DEGREES
	• Press V to accept selection.				
	• Press Toggle key to select the direction of the temperature offset (positive or negative).			POSITIVE OR NEGATIVE	DEGREES
Melt Cycle On/ Off Times	• Press 2 and set melt cycle on time.		all	MLTON:**02**	MELT ON
	• Press Left or Right Timer arrow key and set melt off time.[7]			MLTOFF:**13**	MELT OFF
Diagnostic Mode	• Press 5 to enter diagnostic mode (outputs for heat, basket lifts, and cooking timers turned off).	5, 7		DIAGNOST	DIAGNOST
	• Press 1 to toggle left basket lift output; left basket lift lowers. LED toggles on/off.	5, 7		L BASKET	L BASKET
	• Press 2 to toggle right basket lift output; right basket lift lowers. LED toggles on/off.	5, 7		R BASKET	R BASKET
	• Press and hold 3 to temporarily activate heat demand (heat on); release to deactivate heat demand (heat off). LED toggles on/off.[1]	5, 7		HEAT DEM	HEAT DEM
	• Press 5 to test drain valve interlock. Change valve position (open/close) and press 5 again to update display.	5, 7			
	Drain valve closed.	5, 7		DRN ON	DRN ON
	Drain valve open.	7	5	DRN OFF	DRN OFF

Program Item	Key Sequence	LED Status		Display[8]	
		ON	OFF	Left	Right
	• Press and hold 6 to light all display elements.	all		*.*.*.*.*.*.*.*	*.*.*.*.*.*.*.*
	• Press 7 to test ignition status input. Turn valve on/off, and press 7 again to update display.[2]	5, 7			
	Gas valve on.	5, 7		PILOT ON	PILOT ON
	Gas valve off or ignition module lock out.	5	7	PILOT OF	PILOT OF
Temperature Ready Level	• Press 6 to view the cooking cycle lock out temperature (always °F). To edit, enter the desired lock out temperature (rand 0 to 99°F).[3]		all	READY**40**F	
More Service Programming Level	• Press 8 to enter the More Service Programming. To edit one of the selections, enter the number desired. To exit a selection, press V to accept and return to More Service Programming.	4, 5, 6, 7, 8		MORE	SERVICE
	• Press 4 to view or edit the Shake Alarm duration: 0-98 seconds; 99-continuous alarm until canceled manually.			DT-DUR**05**	DURATION
	• Press 5 to view or edit the Hold Alarm duration: 0-98 seconds; 99-continuous alarm until canceled manually.			HD-DUR.·**05**	DURATION
	• Press 6 to view of edit the Cooking cycle cancel delay; 0-10 seconds.[4]			CANCEL.·**01**	DELAY
	• Press 7 to view or edit the number of basket lifts.		all	LIFTS	**0**, 1, or 2
	Press Toggle key to select the number of basket lifts.				
	0 = none; 1 = one lift; 2 = two lifts.[5] [6]				
	• Press 8 to view or edit the fryer's Energy Source, electric or gas heat.		all	FRYER	**ELECTRIC** or gAS
	Press Toggle key to select the fryer's Energy Source, electric or gas heat.[6] [7]				

Program Item	Key Sequence	LED Status		Display[8]	
		ON	OFF	Left	Right
NOTES:	**[1] Oil Temp LED lamps cycle on/off with heat.** **[2] "PILOT ON" indicates gas valve is on and computer is receiving input status signal from valve. "PILOT OF" (as displayed) indicates gas valve is off and computer is not receiving input status signal from valve. Gas ignition trial sequence starts. If pilot does not light within ignition trial time, "PILOT OF" is displayed and ignition module locks out. Service programming can still continue, but upon exit, "PILOT OF" is displayed. Cycle power to reset.** **[3] If the cooking temperature is below set point by this number, a cooking cycle cannot be started.** **[4] The number of seconds to hold a product key to cancel a cooking cycle.** **[5] If zero basket lifts are selected, the idle setback option under GRC SERIES PROGRAMMING in the Installation & Operation manual is not available.** **[6] Exit Service Programming Mode. Cycle power switch to lock selection into memory.** **[7] Default melt cycle on/off times shown for solid shortening for an electric fryer's energy source (default shortening type and energy source).** **[8] Default value shown in bold.**				

Display, LED, and Keypad Test

1. Press and hold the 5 key while turning on power to initiate test. Release the 5 key during display of software revision level and all LED lamps and display segments should light.
2. For each number key (1-9, 0) pressed, the corresponding value is displayed in each character position on the left and right displays.

   (i.e., 5 key shows 55555555 55555555.)

NOTE: Beeper chirps for as long as the key is held.

3. For each function key pressed, the following values are displayed in each character position on the left and right displays:

   L (left): E

   R (right): R

   TEMPERATURE: T

   PROGRAM (V): V

   TOGGLE: L

   BOIL: B (Single floor model fryers)

   FILTER: D (Kleenscreen fryers)

   LEFT TIME: <

   RIGHT TIME: >
4. Turn off power to exit test.

COMPUTER CONTROL - NEWER CONTROLS

Operation

For operating instructions and programming, refer to OPERATOR MANUAL and computer controls programing start guide.

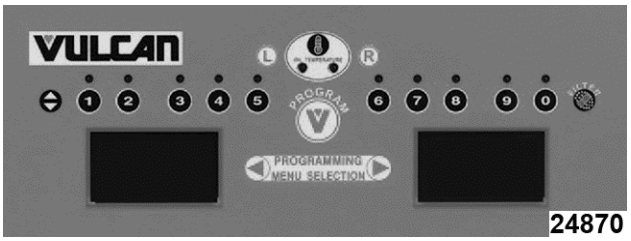

Fig. 50

Service Programming

The computer controls service settings mode is used to select the settings that affect fryer operation and to perform fryer diagnostic tests.

Enter Service Setting Mode

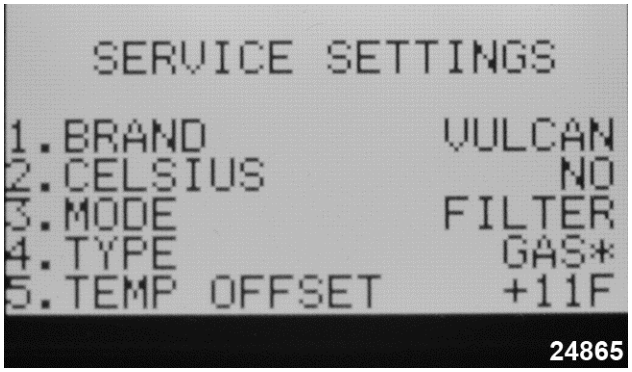



Fig. 52

NOTE: The controls heat demand output signal is off and the heat/ignition status input signal is ignored if the fryer is in cook mode or idling.

1. Turn power switch on and when the program revision is displayed, press PROGRAM to enter Service Setting Mode.
   A. The SERVICE SETTINGS are shown on the left and right display screens.
2. Verify the settings shown on the display screen are correct for the fryer being serviced.
3. To change a service setting.
   A. Press the desired product number key (1 thru 6) on the control panel that corresponds to the service setting number on the display screen.
      1) Beeper chirps on each successful key press and all LED's are off. When a service item is selected, only the keys required to change the setting are active.
   B. Press toggle key to alternate between available selections, or use product number keys where indicated to enter a value. The current selection will be "blinking".
   C. Press PROGRAM key to save the selection - "Blinking" stops.
   D. Access the other service settings as necessary.
4. To enter DIAGNOSTICS mode, press product number key 7 on the control panel.

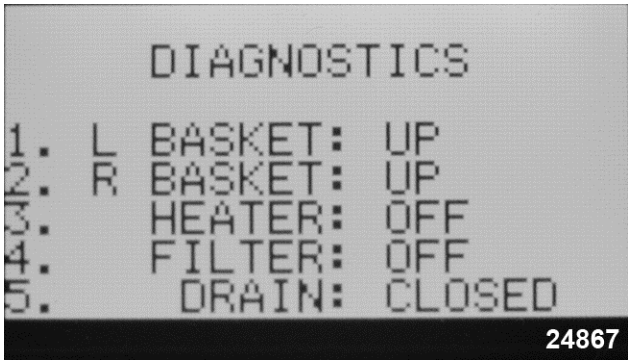

Fig. 53



Fig. 54

   A. Press the desired product number key (1, 2, 3, 4, & 6) on the control panel that corresponds to the diagnostic test number on the display screen to check the output signal to the component.
      1) Press the same product number key again to turn the output off.

NOTE: Item 5 (drain) displays the real time status and does not require pressing the corresponding product number key. Item 3 (heater) - The output signal will be active for 3 seconds (heat on) then turn off.

   B. For item 6 DISPLAY: - change the setting as desired.
      1) Press product number key 6 to access the display screen adjustment settings.
      2) Press the left or right arrow key on the PROGRAMMING MENU SELECTION screen to select the screen to adjust. Display shows "THIS LCD SELECTED".



Fig. 55

3) To adjust the selected screen:

   a. BACKLIGHT - Press toggle key to turn display backlight ON or OFF.

   b. PIXEL MODE - Press product key number 1 two times to change display from white background with black letters to black background with white letters. Press the key again to change it back to original setting.

   c. CONTRAST - Press the L key on the keypad to lower the contrast or press the R key on the keypad to raise the contrast.

4) Press PROGRAM key to return to DIAGNOSTICS MODE.

5. To exit SERVICE SETTINGS MODE and return to normal operation, keypress PROGRAM key.

   A. Display reverts to product menu items.

SERVICE SETTINGS	KEY SEQUENCE	DISPLAY ITEM FLASHES [1]	DESCRIPTION
1. Brand	Press 1 to change brand name. Press toggle key to select HOBART or VULCAN. Press PROGRAM Key to save the selection.	**VULCAN**	Brand name at power on
2. Celsius	Press 2 to change temperature scale. Press toggle key to select NO or YES. Press PROGRAM Key to save the selection.	**NO**	Temperature °F/°C No = Fahrenheit Yes = Celsius
3. Mode	Press 3 to change fryer mode. Press toggle key to select BOIL or FILTER. Press PROGRAM Key to save the selection.	**Boil**	Boil or Filter Boil key = Stand alone fryer Filter key = Filter system battery
4. Type	Press 4 to change energy source. Press toggle key to select ELECTRIC, GAS or GAS*. **NOTE:** VK and TR Gas Fryers MUST be set to GAS*. Press PROGRAM Key to save the selection.	**ELECTRIC**	Electric or Gas

SERVICE SETTINGS	KEY SEQUENCE	DISPLAY ITEM FLASHES [1]	DESCRIPTION
5. Temp Offset	Press 5 to change offset temperature. Press toggle key to change offset value to (+) or (-) (positive or negative). Enter the offset value using the number keys on the keypad. **NOTE:** Offsets the actual oil temp sensed by the temperature probe during calibration. Enter a positive number to decrease the actual oil temperature; or a negative number to increase the oil temperature. Press PROGRAM Key to save the selection.	OFF **00** F (always in °F)	Degrees Fahrenheit and positive zero are the defaults.
6. Baskets	Press 6 to change the number of basket lifts. Press toggle key to select 0, 1, or 2. Press PROGRAM Key to save the selection.	**2**	Display shows 0, 1 or 2
7. Diagnostics	Press 7 to enter diagnostic mode (outputs for heat, basket lifts and cooking timers remain off).	——	DIAGNOSTICS (shown on display screen)
1.) L Basket	Press 1 to toggle left basket lift output to lower the lift.	DOWN	Lowers basket
	Press 1 again to raise the lift.	**UP**	Raises basket
2.) R Basket	Press 2 to toggle right basket lift output to lower the lift.	DOWN	Lowers basket
	Press 2 again to raise the lift.	**UP**	Raises basket
3.) Heater	Press 3 to turn heat output ON for 3 seconds only. OIL TEMPERATURE LED's light with heat demand.	On then **OFF**	Gas burner or heating elements turn on then off.
4.) Filter	Press 4 to turn filter output ON.	ON	Pump motor on
	NOTE: Filtering system fryer batteries only		
	Press 4 again to turn output OFF.	**OFF**	Pump motor off
5.) Drain	Display indicates the position of the drain valve. (DVI switch input to control) (keypress not required). Manually change valve position to test, and display will update.	**CLOSED**	
	Drain valve open	OPEN	
	Drain valve closed	**CLOSED**	

SERVICE SETTINGS	KEY SEQUENCE	DISPLAY ITEM FLASHES [1]	DESCRIPTION
6.) Display	Press 6 to adjust the left and right display screen settings. Refer to LCD display screen picture under ENTER SERVICE SETTINGS MODE. Press the left or right arrow key on control panel to select the screen to adjust. To adjust the selected screen: • BACKLIGHT - Press toggle key to turn display backlight ON or OFF. • PIXEL MODE - Press product key number 1 two times to change display from white background with black letters to black background with white letters. Press the key again to change it back to original setting. • CONTRAST - Press the L key on the keypad to lower the contrast or press the R key on the keypad to raise the contrast.	N/A	THIS LCD SELECTED
Exit Diagnostic and Service Mode	Press PROGRAM Key to exit the selected DIAGNOSTICS test and return to Service Settings Mode.	N/A	SERVICE SETTINGS (shown on display screen)
NOTES:	**[1] Default values shown in bold.**		

Alarm Messages

The alarms take precedence over any other controller mode or function (outputs off, active timers canceled).

ALARMS	DESCRIPTION
PROBE FAULT	If a temperature probe fault occurs, the alarm sounds continuously and the display shows PROBE on the left display and either OPEN or SHORT on the right display. This alarm state will remain until the fault clears or power switch is cycled. • OPEN - Probe detects temperature less than 40°F. • SHORTED - Probe detects temperature greater than 460°F.
IGNITION STATUS GAS -Selected under service settings - Type.	If the ignition status input is not present, both displays show IGNITION LOCKOUT. If the input comes back in less than 8 seconds, the displays will revert to normal operation. If the input remains inactive for more than 90 seconds, IGNITION LOCKOUT will be shown on the left display and CHECK GAS SUPPLY will be shown right display, and the alarm will sound continuously. This alarm state will remain until power switch is cycled.
IGNITION STATUS GAS Selected incorrectly under service settings - Type.	After 20 seconds in normal operation mode, IGNITION LOCKOUT will be shown on the left display and CHECK GAS SUPPLY will be shown right display, and the alarm will sound continuously. Enter SERVICE SETTINGS and select GAS* as the type.

ELECTRICAL OPERATION

COMPONENT FUNCTION

FRYER CONTROLS

Solid State or Computer Cooking Control (D or C Models) . . . . . . Monitors and evaluates input signals to the control: activates heat output signal to maintain shortening temperature; counts product cook time(s), and signals the electronic alarm at the end of a cooking cycle; activates the left and right lift output signal to operate the basket lift(s); and activates filter output signal to power the fill solenoid valve.

. . . . . . **NOTE:** By utilizing the same wiring harness connections, the two control types are interchangeable between fryers.

Control Interface Board . . . . . . Provides the output signal interface from the cooking control to regulate gas heating, basket lift operation, and fill solenoid valve operation. The board components consist of a heat control Triac and K1, K2 & K3 N.O. relays.

Transformer . . . . . . Supplies 24VAC to the cooking control. If equipped with electronic ignition, also supplies power to ignition control module. Transformer is energized when power switch is turned on.

Power Switch . . . . . . Supplies power to control circuit for fryer operation and filtering.

Gas Combination Valve . . . . . . Allows gas flow to the pilot when pilot valve coil is energized, and gas flow to the burners when main valve coil is energized. Also regulates the gas manifold pressure.

High Limit Thermostat . . . . . . Prevents the shortening from reaching temperatures over 450°F (auto reset @ 415°F). Serves as a backup to the cooking control's high temperature alarm setting of 415°F (normal operation resumes when temperature falls below this point).

Temperature Probe . . . Senses temperature of shortening. Converts the temperature into a resistance valve which is monitored by the cooking control. The probe is an RTD (resistance temperature detector) of the Thermistor type. As temperature increases, the resistance value decreases.

Ignition Control Module . . . . . . Controls and monitors gas pilot ignition. Energizes pilot valve coil on the combination control valve, and generates spark for pilot ignition. Monitors the presence of a flame, and supplies an ignition status input signal to the cooking control. Electronic ignition models only.

Ignitor/Flame Sense . . . . . . Ignites the gas pilot, and senses the presence of a flame. The flame presence generates a micro-amp flame sense current that is rectified to the ignition control module. The spark ignitor/flame sense is a component for the gas pilot with electronic ignition only.

Drain Valve Interlock Switch (DVI) . . . . . . A magnetic reed switch mounted on the manual drain valve that supplies a drain valve position signal (open/closed) to the cooking control. When drain valve is open, the drain interlock input to the control is removed (magnetic reed switch contacts open). This prevents gas burners from coming on with the fry tank empty.

KLEENSCREEN FILTER CONTROLS

Fill Solenoid Valve . . . . When energized by filter key, the solenoid valve opens to allow the flow of shortening through filtering system.

Pump Motor . . . . . . Operates pump to circulate shortening through filtering system.

Discard Valve Switch . . . . . . A magnetic reed switch mounted on the mechanical discard valve that closes when discard valve handle is extended to discard the shortening. Prevents R2 filter relay N.C. contacts from suppling power to the fill solenoid valve when filter key is pressed.

R1 Pump Motor Relay . . . . . . When 24VAC relay coil is energized by filter key, supplies 120VAC to pump motor and fill solenoid valve (through R2 fill relay N.C. contacts).

R2 Fill Relay . . . . . . When 24VAC relay coil is energized by filter key, supplies 24VAC to the fill solenoid valve, to open the valve, and allow shortening to flow through filter system.

COMPONENT LOCATION

2GRC45F KLEENSCREEN FRYER SHOWN
COMPUTER CONTROLS, C MODEL

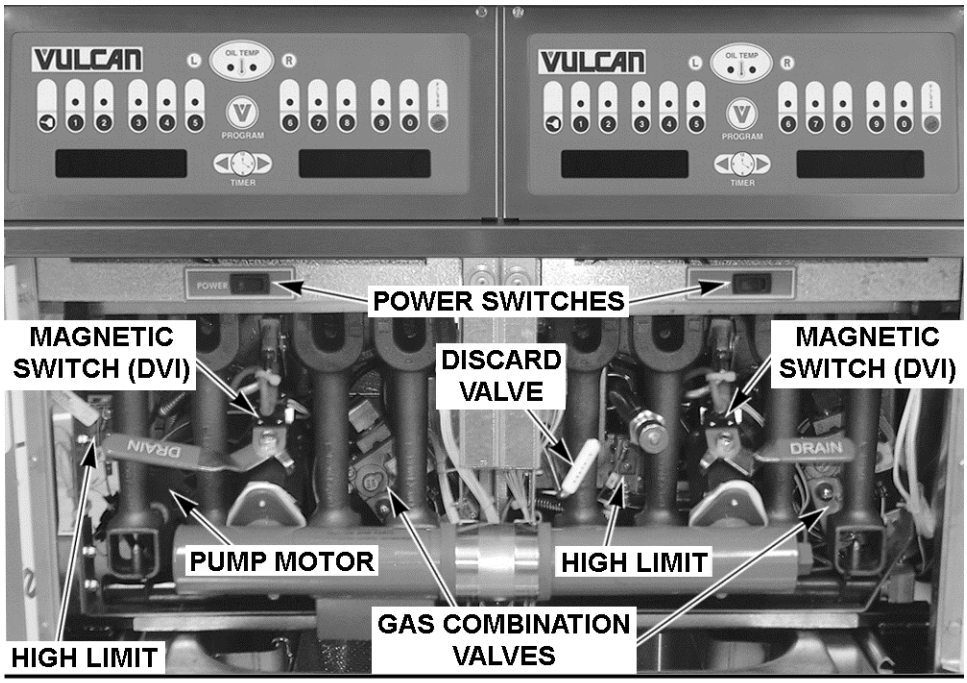

* POWER SUPPLY BOX LOCATION - RIGHT SIDE OF EACH FRYER SECTION.

Fig. 56

COMPONENT AREA BEHIND CONTROL PANEL

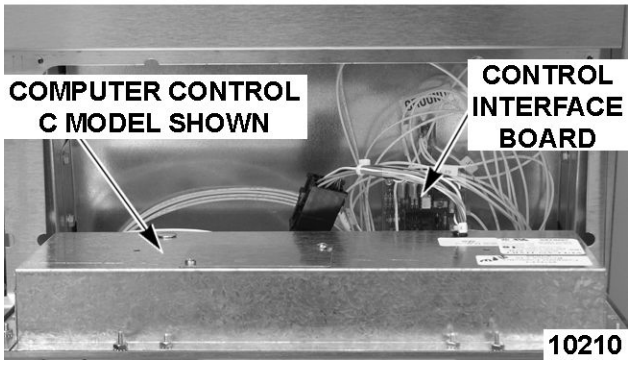

Fig. 57

DUAL BASKET LIFT COMPONENTS (REAR VIEW SHOWN)

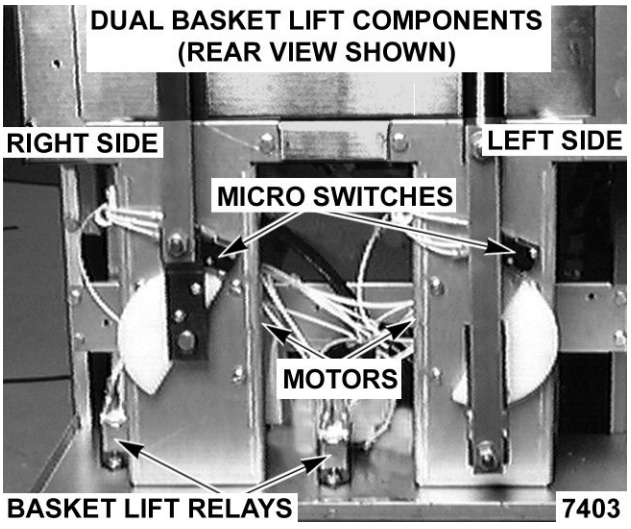

Fig. 58

POWER SUPPLY BOX

POWER SUPPLY BOX

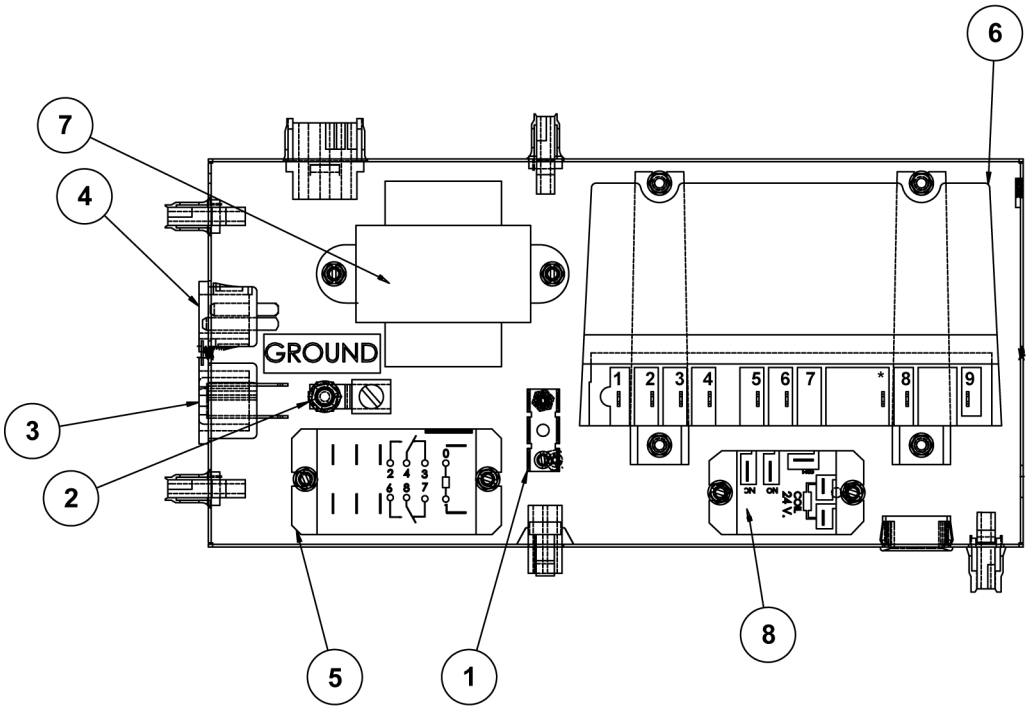

ITEM NO.	DESCRIPTION
8	RELAY, R2 FILL (24 VAC)
7	TRANSFORMER 40VA
6	MODULE, IGNITION
5	RELAY, R1 PUMP MOTOR (24 VAC)
4	RECEPTACLE, MALE POWER (IN)
3	RECEPATCLE, FEMALE POWER (OUT)
2	LUG, GROUND
1	LUG, TERMINAL

NOTES:

1. **POWER SUPPLY BOX FOR ELECTRONIC IGNITION SHOWN.**
2. **FOR MANUAL IGNITION, THE IGNITION CONTROL MODULE IS REMOVED.**
3. **ON SINGLE FLOOR MODEL FRYERS, ITEM NO. 5 & 8 ARE INSTALLED BUT NOT USED.**

AI1713

Fig. 59

SEQUENCE OF OPERATION

Solid State or Computer, Cooking Control

Refer to schematic diagram AI1709 for Cooking Control operation.

NOTE: If using solid shortening, the control should be programmed to use the melt cycle. In the melt cycle, the control will cycle the heat on/off in short intervals. This will gradually heat and liquify the shortening until it reaches 135°F. Melt cycle default times in seconds are:

- Liquid — L = 16 on, 18 off.
- Solid — S = 8 on, 26 off (default for gas).
- No melt — 0 = 100% on.

On solid state control only, "CY" (cycle) is displayed before the shortening letter designation, and zero represents none (no melt).

The control then resumes normal operation as described in this sequence.

1. Conditions.
    A. Fryer connected to correct supply voltage and properly grounded.
    B. Gas supply and gas combination valves are on.
    C. Power switch to the fryer section in the off position.
    D. Shortening at proper level in fry tank, and below last set point temperature used.
    E. Cooking control is set up properly and ready to use.
    F. Manual drain valve closed (drain valve interlock switch N.O. is closed).
    G. High limit thermostat closed.
2. Turn on power switch.
    A. Power to terminal 5 (COM) on left and right basket relays.
    B. 24VAC transformer energized.
3. Cooking control powers on, initializes and performs a diagnostic self check.

NOTE: If cooking control passes diagnostic self check, the output signals are turned on and operation sequence continues. If cooking control does not pass diagnostic self check, the control displays an error message for the problem, disables keypad, and sounds the electronic alarm continuously. Refer to TROUBLESHOOTING.

4. Ignition module is powered (24VAC), initializes, and generates spark at ignitor (ignition trial cycle starts).
    A. Pilot voltage (PV) N.O. contacts close, pilot valve coil energized at P3 terminal, and valve opens for gas flow to pilot.
        1) Pilot flame established. A micro amp *flame sense* current is rectified to ignition module through ignitor cable and sparking stops.
        2) Main voltage (MV) N.O. contacts close and provide ignition status input signal (24VAC) to cooking control at pin E1-6
    B. If pilot ignition is not established within the first several seconds of ignition trial time, the cooking control display indicates *pilot out* as the ignition module continues to generate a spark at ignitor.
    C. If pilot is not established within 90 seconds of the ignition module being energized, the ignition module locks out power to gas valve. Cooking control display indicates *ignition lockout*, keypad is disabled, and the electronic alarm sounds continuously.
        1) The system remains locked out until the power switch is cycled to reset the system and restart the ignition trial cycle.
5. Cooking control evaluates input signals from: ignition status at pin E1-6; drain valve interlock at pin E1-5; and temperature probe at pins E1-3 and E1-4 (high and low).
    A. If the inputs to the control are valid and the shortening temperature is below set point, the heat output (24VAC) at pin E1-8 is then activated and power is applied to heat control Triac. Display indicates the selected melt cycle if shortening temperature is below 135°F; or display indicates heating if shortening temperature is above 135°F.
    B. Heat control Triac energized and supplies voltage to gas valve M1 terminal.
        1) Main valve coil energized, and valve opens for gas flow to burners.
        2) Burners light and heat the shortening in fry tank.

NOTE: As long as the ignition control module senses a pilot flame, the internal main voltage (MV) contacts (N.O.) on the ignition module remain closed, and main gas valve stays on.

6. Shortening reaches set temperature.
    A. Cooking control deactivates the heat output (24VAC) at pin E1-8, and power is removed from heat control Triac.
        1) Main valve coil de-energized, and valve closes.
        2) Gas flow stops and burners go out.

7. Cooking control cycles heat output on shortening temperature until: power switch is turned off; ignition input status is removed; drain valve interlock input status is removed; temperature probe input is outside acceptable limits; or a high limit condition occurs.

NOTE: Steps 8 and 9 discuss open high limits. For information on cooking control error messages, refer to TROUBLESHOOTING.

8. If shortening reaches 415°F or higher: cooking control turns off the heat output signal and basket lift output signals; cancels cooking timers (if active); disables keypad; display indicates *High Temp*; and the electronic alarm sounds continuously.
    A. Turn off power switch to silence the alarm. Fryer operation can resume when temperature drops below 415°F.
9. If shortening reaches 450°F or higher: high limit thermostat opens, power is removed from the pilot valve coil, and valve closes to stop pilot gas flow.
    A. Ignition trial cycle will start, but pilot will be unable to light.
    B. Turn off power switch to silence the alarm. Fryer operation can resume when the temperature drops below 415°F.

Kleenscreen Filtering System

Refer to schematic diagram AI1709 for Kleenscreen Filter System operation. Refer to Installation & Operation manual and Kleenscreen Filtration System Supplement manual for specific instructions on filtering.

NOTE: The discard valve handle is connected to a mechanical valve and magnetic reed switch assembly to route the flow of shortening in the filtering system, and supply power to the pump motor.

1. Conditions.
    A. Fryer connected to correct supply voltage, and is properly grounded.
    B. Power switch to fryer section to filter turned on.
    C. The cooking control should be set up properly, and ready to use.
    D. Cooking control temperature setting between 300°F (minimum) and 350°F (maximum).

NOTE: Shortening should not be filtered outside of this temperature range. At lower temperatures, the shortening is thicker, which may increase filtering time and place a greater load on the pump. At higher shortening temperatures, oil seal life is decreased.

    E. Filter drawer assembly installed properly.
    F. Discard valve handle (white) retracted.
        1) Discard valve switch N.O. contacts open. Mechanical discard valve closed.
2. Allow shortening to cycle between 300°F and 350°F for approximately 10 minutes.

NOTE: If using solid shortening, once it has melted, stir the shortening to eliminate any solid shortening in cold zone of the fry tank.

3. Open the drain valve to the fryer section in need of filtering, and drain the shortening into filter tank.
    A. Display indicates *draining*.
    B. Drain valve interlock contacts open, and the position of the drain valve is indicated to the cooking control.

NOTE: If using solid shortening, allow hot shortening to stand in filter tank for approximately 6 minutes prior to filtering.

4. Press and hold filter key on the control panel for 3 seconds. The filter output signal (24VAC) at pin E1-9 is turned on, and the interface board K3 relay coil is energized at pins 11 and 4.
    A. K3 N.O. contacts close, and 24VAC is output from the interface board at pin 12.
    B. R1 pump motor relay coil (24VAC) is energized, and both sets of N.O. contacts close.

NOTE: Jumper wire number 24 connects one set of R1 N.O. contacts to R2 COM.

        1) Fill solenoid valve is energized (120VAC) through R2 fill relay N.C. contacts, and valve opens.
        2) Pump motor is energized (120VAC), and pump circulates shortening through filtering system.
5. When filtering is completed, close the drain valve, and allow the fry tank to refill.
    A. Display indicates *fill tank*.
    B. Drain valve interlock contacts close, and the position of the drain valve is indicated to the cooking control.

6. When all filtered shortening is returned to the fry tank, press filter key on the control panel.
   A. Power is removed from fill solenoid valve and pump motor.
   B. Display indicates *tank full hit temp*. If shortening is at the proper level in fry tank, press and hold the temp key until shortening temperature is displayed. Filtering cycle is complete, and fryer resumes normal operation.

NOTE: If using solid shortening, when all filtered shortening is returned to the fry tank, and pump motor is off, open the filter drawer approximately 1 inch. Allow the remaining shortening in the line to drain into the filter tank to prevent possible clogging after the shortening cools and solidifies. Close the filter drawer when complete.

SCHEMATIC DIAGRAMS

Electronic Ignition, Solid State or Computer Control

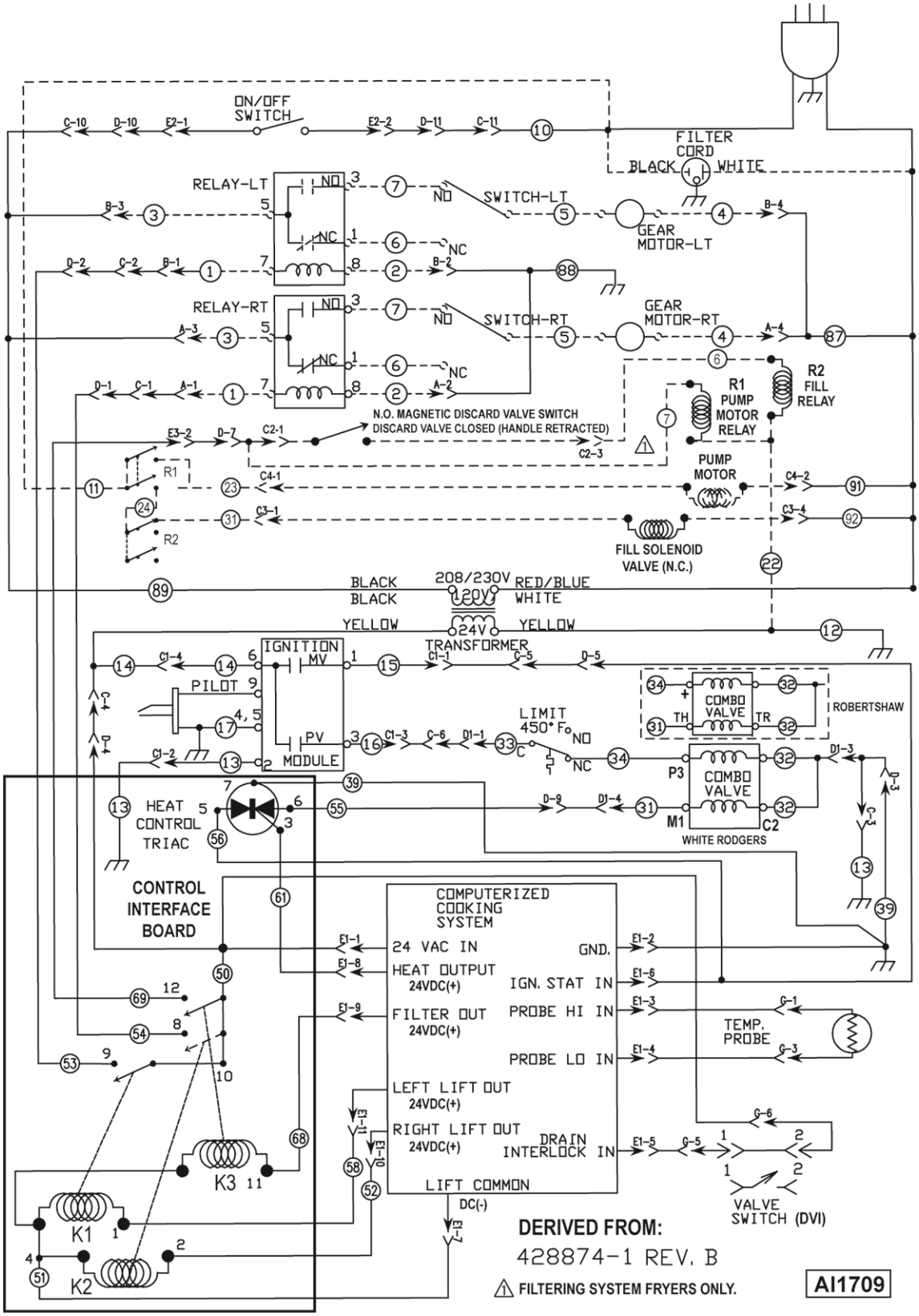

Fig. 60

Manual Ignition, Solid State or Computer Control

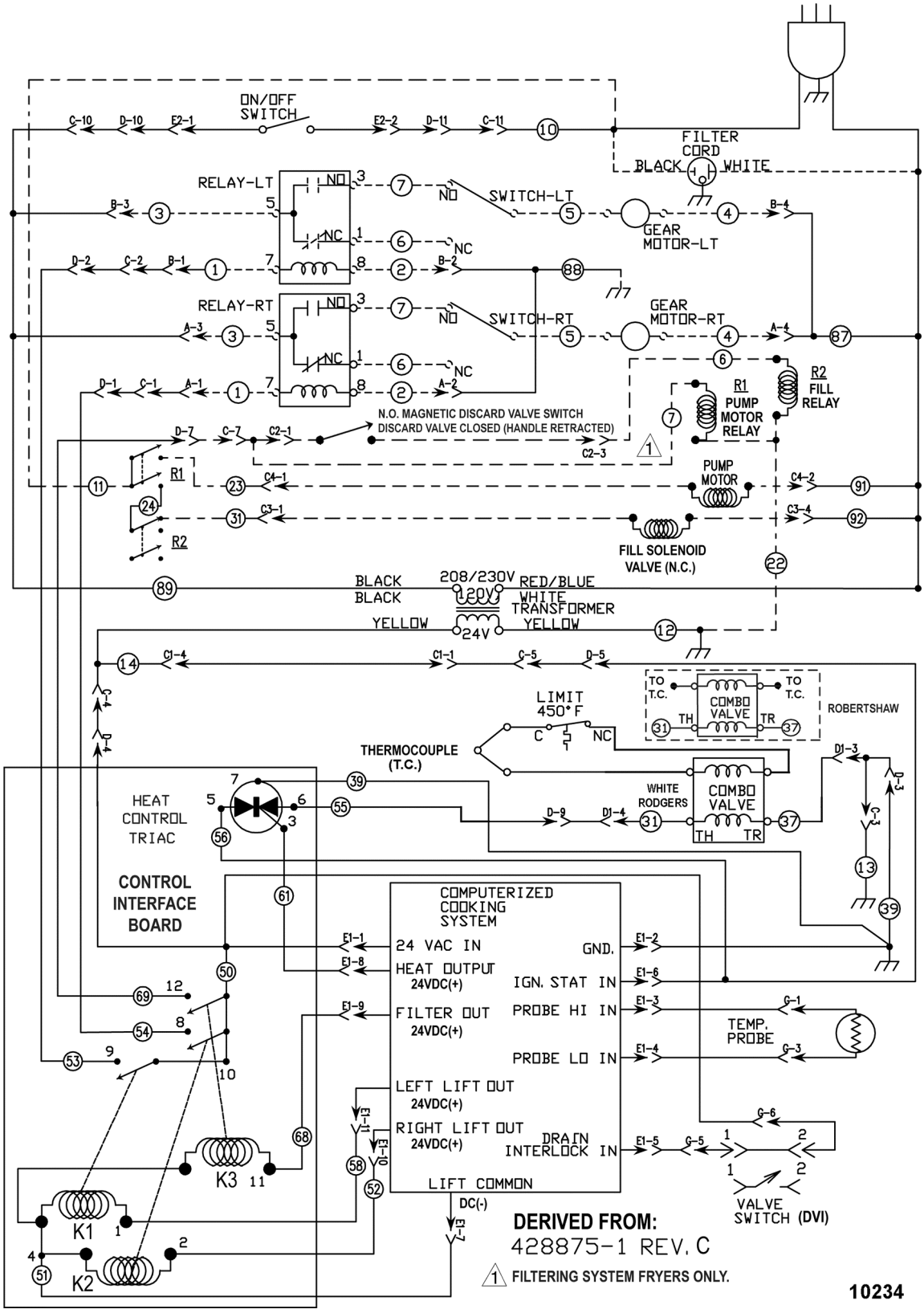

Fig. 61

WIRING DIAGRAMS

Electronic Ignition, Solid State or Computer Control

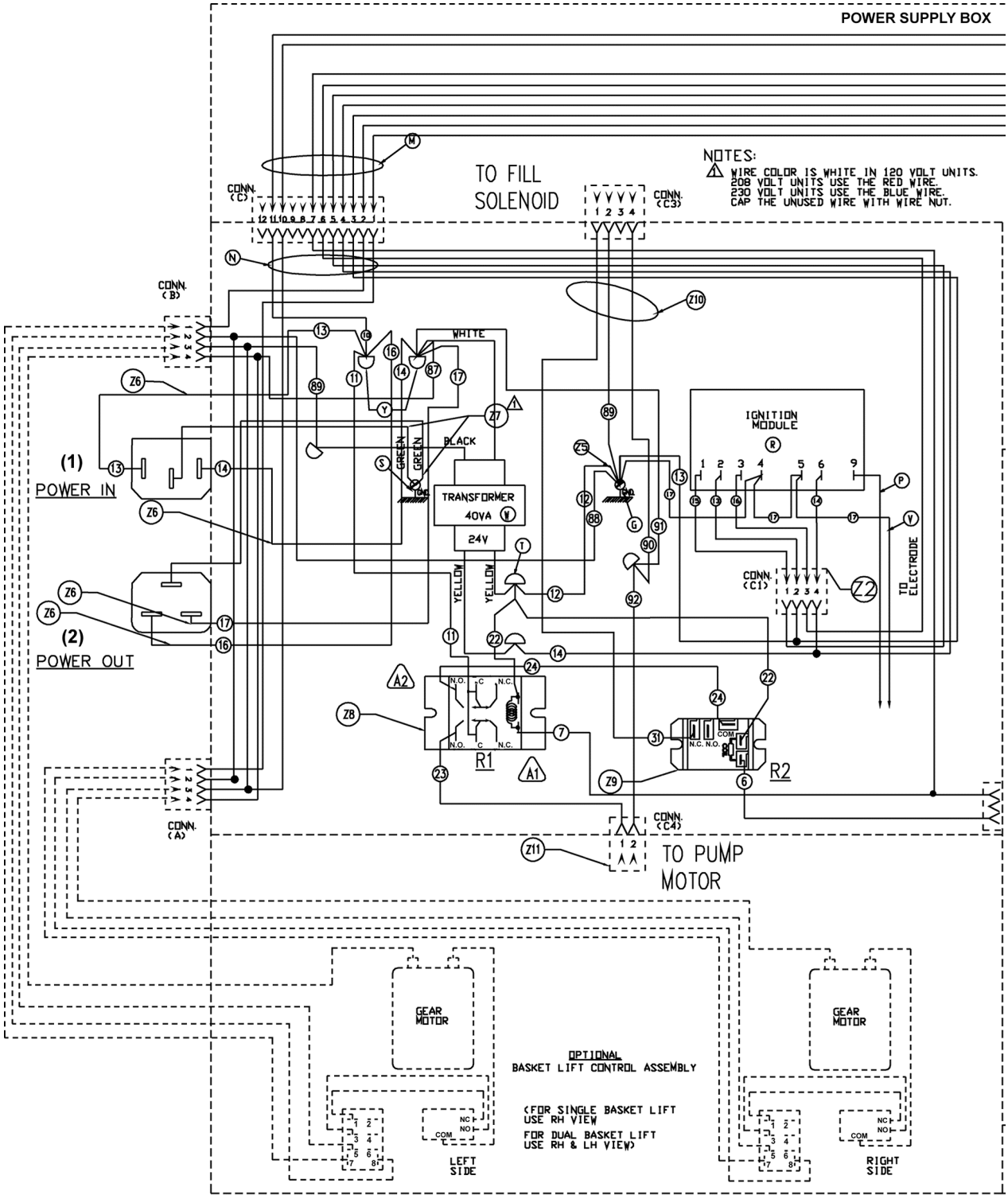

(1) FRYER POWER SUPPLY CORD CONNECTED TO THE BUILDINGS POWER SOURCE OR A JUMPER CORD IF POWER CONNECTION IS FROM OTHER FRYER SECTIONS.

(2) JUMPER CORD POWER TO THE OTHER FRYER SECTIONS.

PAGE 1 OF 2
(SEE 10206)

10205

Fig. 62

Electronic Ignition, Solid State or Computer Control (cont'd)

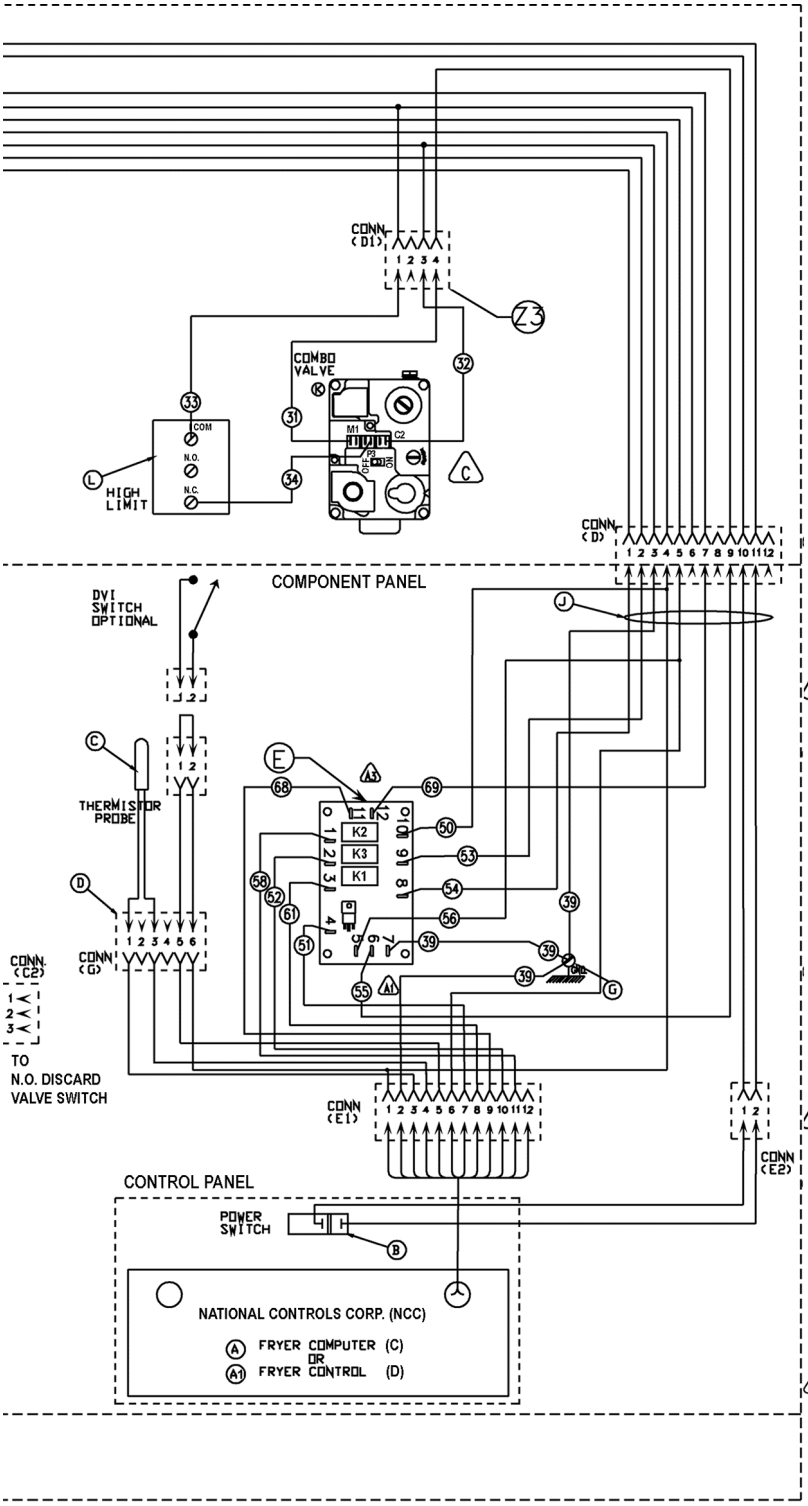

SEE SCHEMATIC DECAL 428874-1

PAGE 2 OF 2
(SEE 10205)

10206

req.	REQ.	IT.	DESCRIPTION	FIN.
1	1	Z11	HARNESS, MOTOR CONNECT	-
1	1	Z10	HARNESS, SOLENOID CONNECT	-
1	1	Z9	RELAY SPST 24 VAC COIL	-
1	1	Z8	RELAY 24 VAC COIL CONT. RATING 1 HP 120 VOLT	-
2	2	Z7	WIRE ASSEMBLY (GREEN)	-
4	4	Z6	WIRE ASSEMBLY [13,14,16,17]	-
1	1	Z5	WIRE ASSEMBLY [12]	-
C 1	1	Z3	MANIFOLD HARNESS	-
1	1	Z2	HARNESS-IGNITION MODULE	-
1	1	Z1	OPTIONAL FILTER SUPPLY CORD	-
2	2	Y	WIRE NUT YELLOW	-
1	1	W	24V 40VA TRANSFORMER 120 VOLT / 240 VOLT	
1	1	V	LEAD ASSEMBLY [17]	-
3	3	T	WIRE NUT	-
1	1	S	GROUND LUG	-
1	1	R	IGNITION MODULE	-
1	1	P	IGNITOR CABLE	-
1	1	N	POWER HARNESS	-
1	1	M	MAIN HARNESS	-
1	1	L	HI-LIMIT	-
C 1	1	K	COMBO VALVE W. R. NAT / LP	
1	1	J	INTERFACE HARNESS	-
1	2	G	TERMINAL, STATIONARY	-
1	1	E	CONTROL INTERFACE TRIDELTA	-
1	1	D	D.V.I. HARNESS ASSEMBLY	-
1	1	C	THERMISTOR	-
1	1	B	ROCKER SWITCH ASSEMBLY	-
D 1	-	A1	NCC CONTROLLER W/TIMER(S) W/FILTER / WO/FILTER	
D -	1	A	NCC COMPUTER W/FILTER / WO/FILTER	-

D MODELS
C MODELS

WIRING INFORMATION
FOR UNITS LISTED

WIRING DIAGRAM W & WO/SOLENOID, FILL
CCS FRYERS W/E.I. ,W & WO/LIFTS

DERIVED FROM: D 428863-1 REV. D

SCALE NONE

Fig. 63

Manual Ignition, Solid State or Computer Control

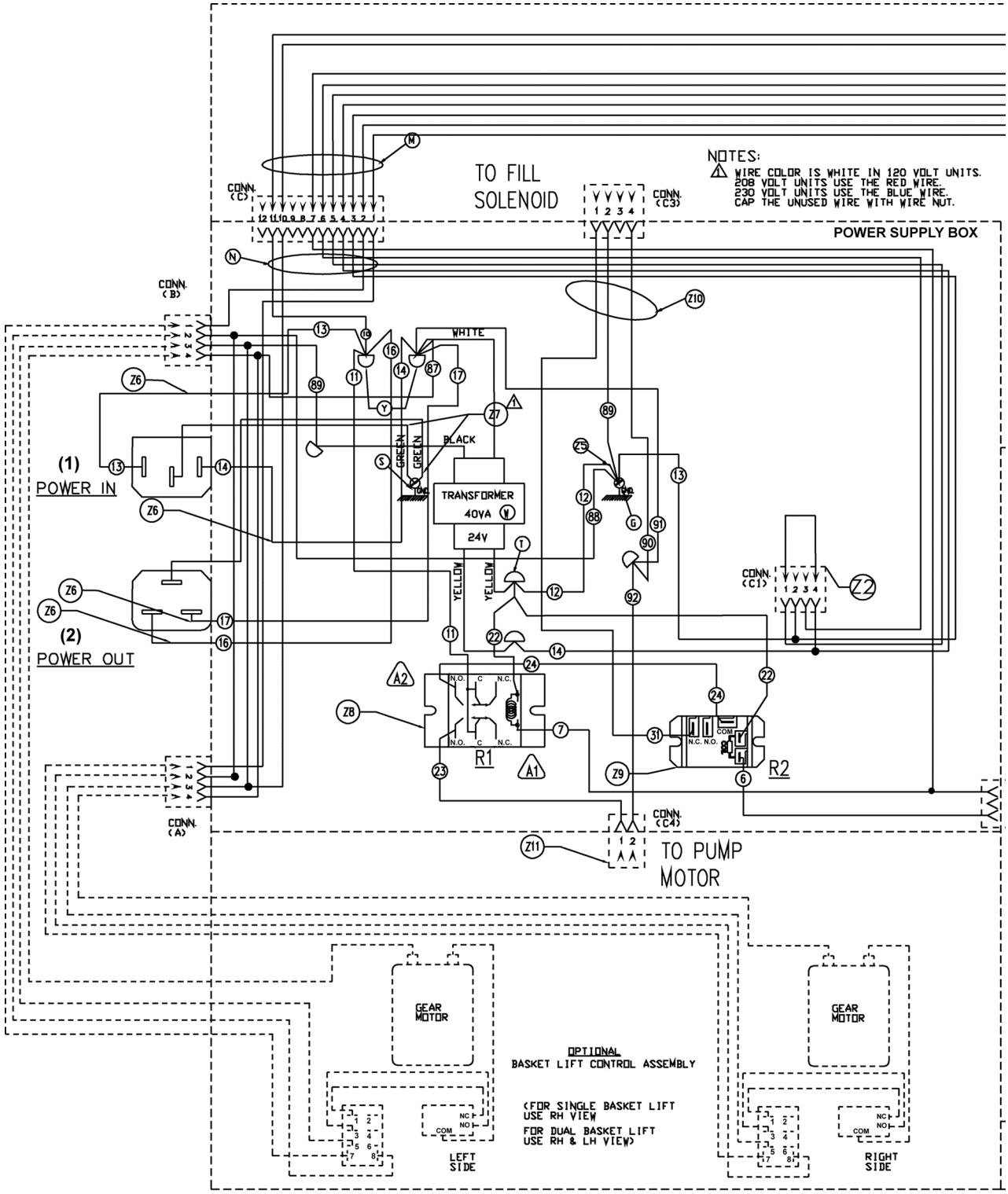

(1) FRYER POWER SUPPLY CORD CONNECTED TO THE BUILDINGS POWER SOURCE OR A JUMPER CORD IF POWER CONNECTION IS FROM OTHER FRYER SECTIONS.

(2) JUMPER CORD POWER TO THE OTHER FRYER SECTIONS.

PAGE 1 OF 2
(SEE 10208)

10207

Fig. 64

Manual Ignition, Solid State or Computer Control (cont'd)

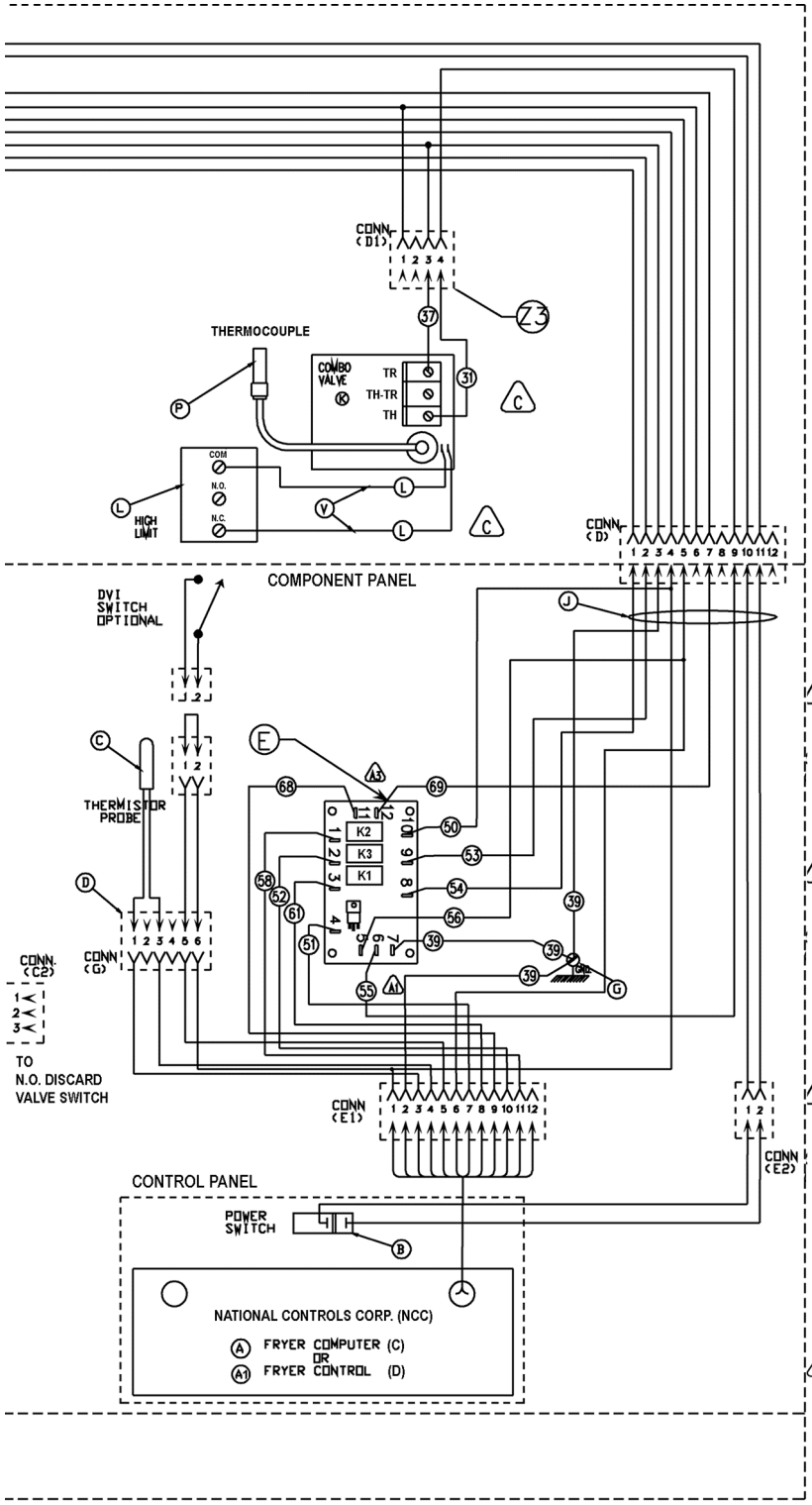

req.	REQ.	IT.	DESCRIPTION		FIN.
1	1	Z11	HARNESS, MOTOR CONNECT		-
1	1	Z10	HARNESS, SOLENOID CONNECT		-
1	1	Z9	RELAY SPST 24 VAC COIL		-
1	1	Z8	RELAY 24 VAC COIL	CONT. RATING 1 HP 120 VOLT	-
2	2	Z7	WIRE ASSEMBLY (GREEN)		-
4	4	Z6	WIRE ASSEMBLY [13,14,16,17]		-
1	1	Z5	WIRE ASSEMBLY [12]		-
C 1	1	Z3	MANIFOLD HARNESS		-
1	1	Z2	HARNESS-IGNITION MODULE		-
1	1	Z1	OPTIONAL FILTER SUPPLY CORD		-
2	2	Y	WIRE NUT YELLOW		-
1	1	W	24V 40VA TRANSFORMER	120 VOLT / 240 VOLT	
C 1	2	V	LIMIT WIRES		-
3	3	T	WIRE NUT		-
1	1	S	GROUND LUG		-
1	1	P	THERMOCOUPLE		-
1	1	N	POWER HARNESS		-
1	1	M	MAIN HARNESS		-
1	1	L	HI-LIMIT		-
C 1	1	K	COMBO VALVE W.R.	NAT / LP	
1	1	J	INTERFACE HARNESS		-
1	2	G	TERMINAL, STATIONARY		-
1	1	E	CONTROL INTERFACE, TRIDELTA		-
1	1	D	D.V.I. HARNESS ASSEMBLY		-
1	1	C	THERMISTOR		-
1	1	B	ROCKER SWITCH ASSEMBLY		-
D 1	-	A1	NCC CONTROLLER W/TIMER(S)	W/FILTER / WO/FILTER	
-	1	A	NCC COMPUTER	W/FILTER / WO/FILTER	

D MODELS
C MODELS

WIRING INFORMATION
FOR UNITS LISTED

WIRING DIAGRAM W & WO/SOLENOID. FILL
CCS FRYERS WO/E.I. ,W & WO/LIFTS

DERIVED FROM: D 428863-2 REV. D
SCALE NONE

SEE SCHEMATIC DECAL 428875-1

PAGE 2 OF 2
(SEE 10207)

10208

Fig. 65

Filtering System Fryers

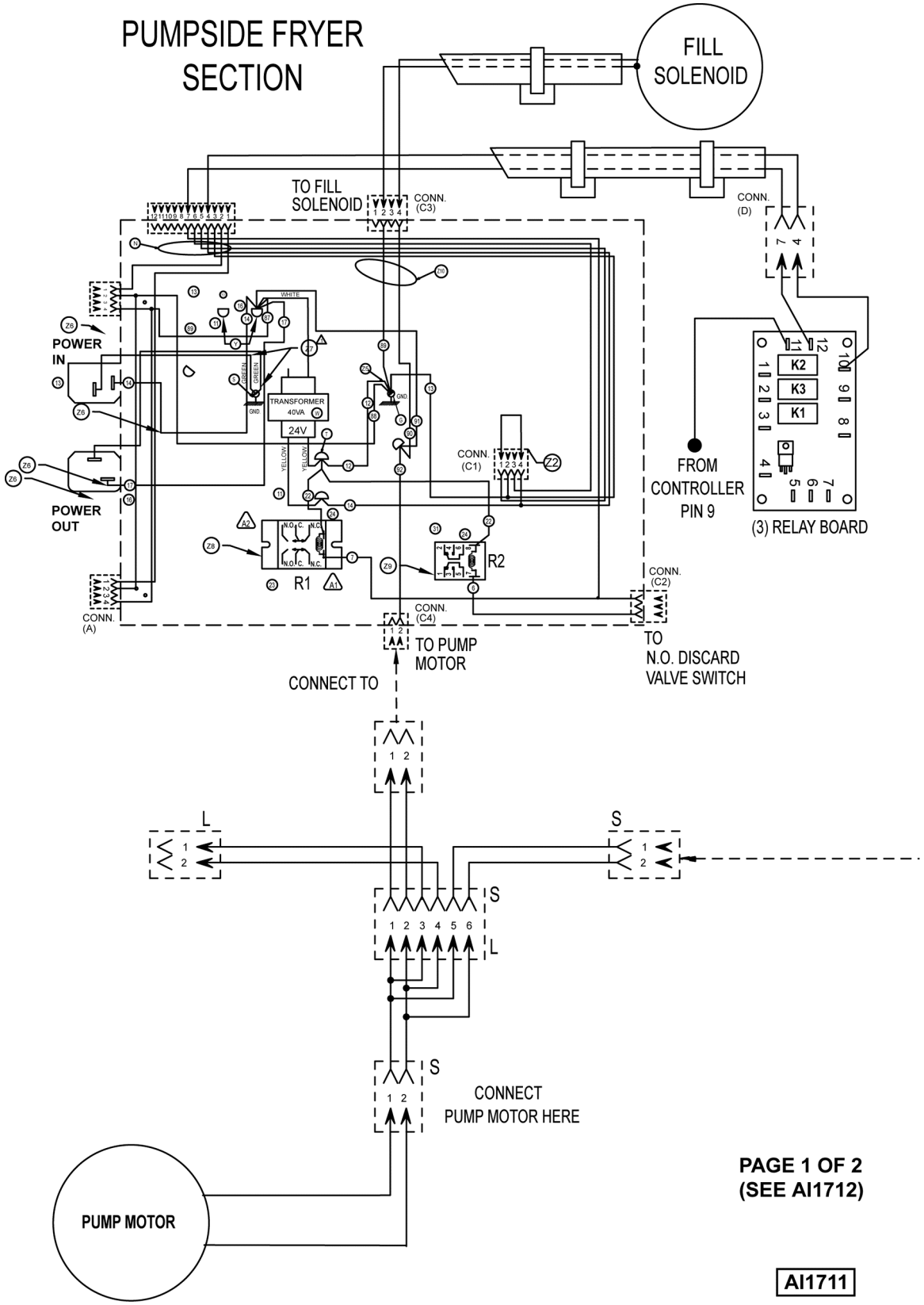

Fig. 66

Filtering System Fryers (cont'd)

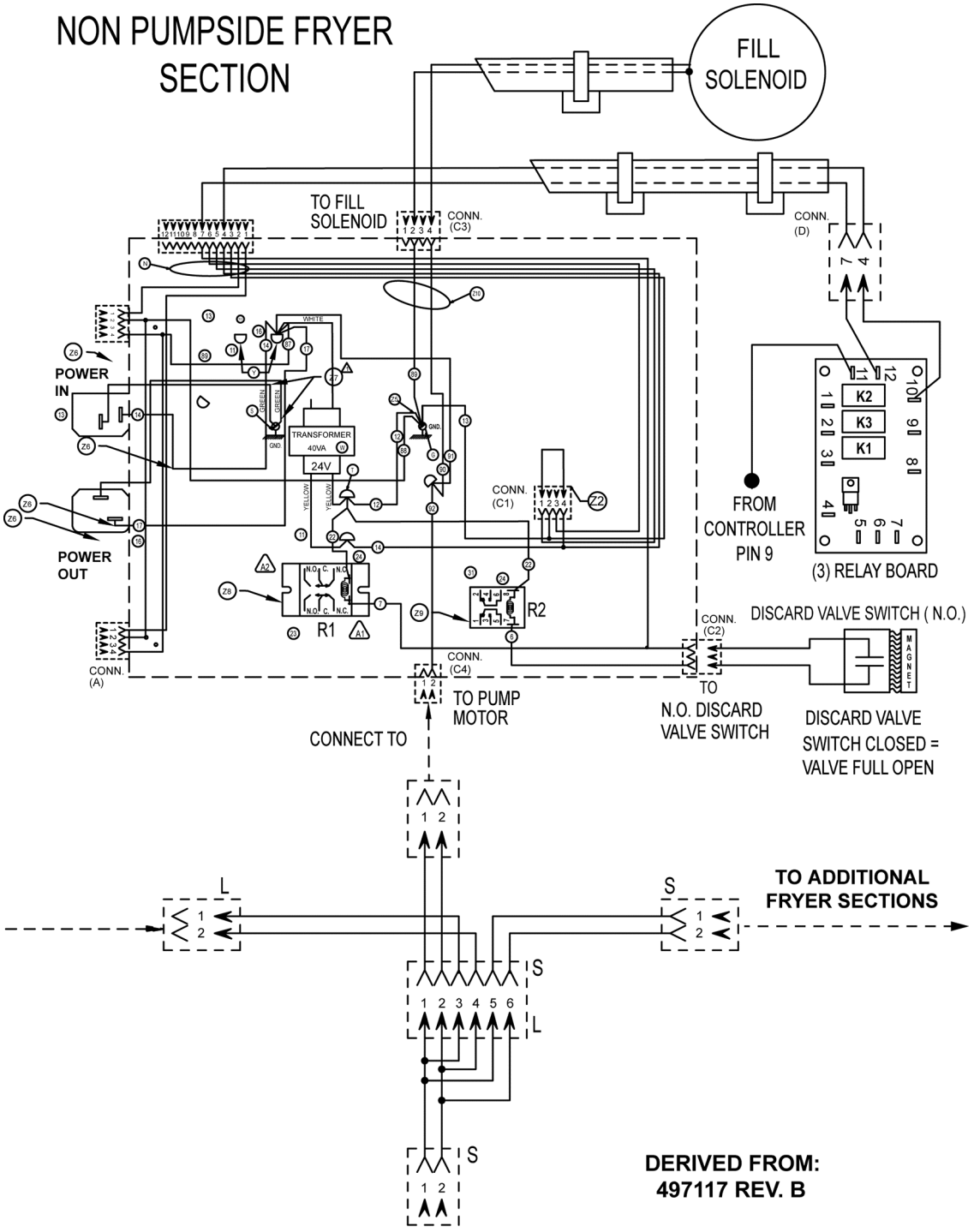

Fig. 67

Frymate (Dump Station)

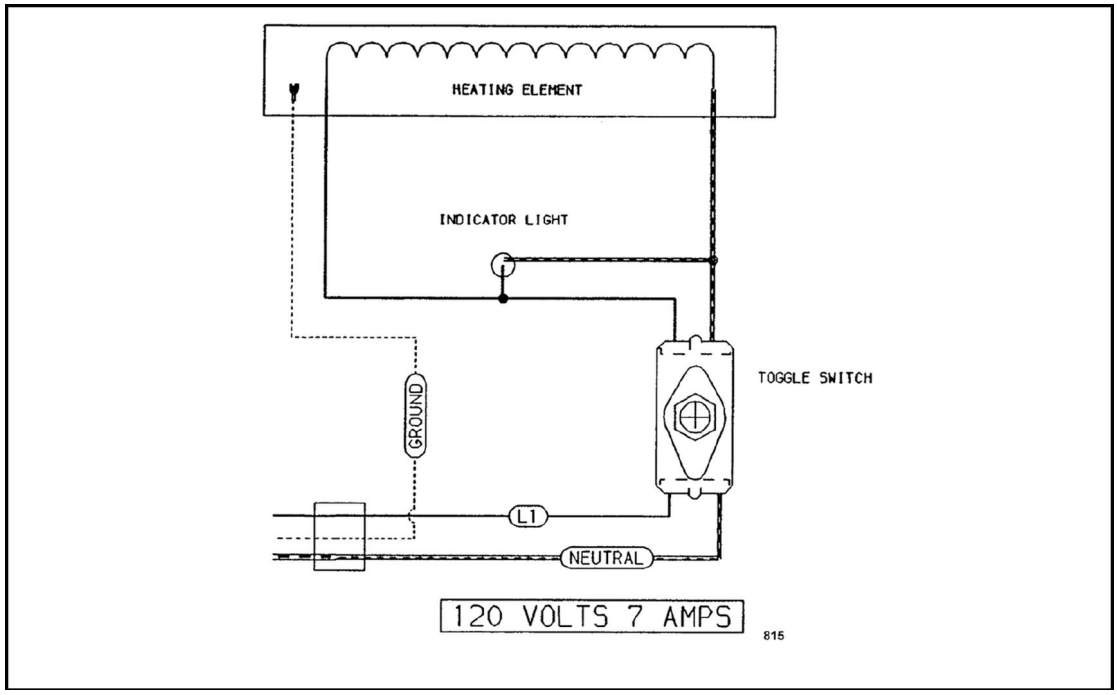

Fig. 68

TROUBLESHOOTING

ALL MODELS

Symptoms	Possible Causes
No spark to ignite pilot gas, display lit.	1. Drain valve switch open (alarm message displayed), or switch malfunction. 2. Shorted electrode, or an improper ground on ignitor/flame sense. 3. Ignitor cable open. 4. Interconnecting wiring malfunction. 5. Ignition Module malfunction.
Sparks, but gas does not ignite, display lit.	1. Gas combination valve off or inoperative. 2. Manual gas valve closed. 3. Gas supply off, or insufficient gas pressure. 4. High limit thermostat open. 5. Interconnecting wiring malfunction. 6. Ignition Module malfunction.
Gas pilot ignites, but will not maintain flame.	1. Ignitor lead connections malfunction. 2. Ignitor ground inoperative. 3. Ignitor/flame sense misaligned or malfunction. 4. Insufficient gas pressure. 5. Incorrect polarity from transformer to Ignition Module.
Gas burners ignite, but will not maintain flame.	1. Gas pressure incorrect. 2. Gas orifice obstructed or incorrect. 3. Burner malfunction. 4. Gas pilot malfunction.
Excessive or low heat.	1. Incorrect temperature offset selected. 2. Temperature probe malfunction. 3. Gas pressure incorrect. 4. Gas orifice obstructed or incorrect. 5. Cooking control malfunction. 6. Interface board malfunction.
Intermittent problems.	1. High ambient temperatures. 2. Wiring connections loose.

Symptoms	Possible Causes
No power to cooking control (display not lit), fryer does not heat.	1. Power switch off or malfunction. 2. Main circuit breaker off. 3. Transformer inoperative. 4. Interconnecting wiring malfunction.
High limit thermostat shutting off gas burners.	1. Shortening level below minimum fill line. 2. Probe malfunction. 3. Cooking control malfunction. 4. Interface board malfunction. 5. High limit thermostat malfunction.
Excessive time to melt shortening (more than 45 minutes).	1. Melt cycle timing incorrect. 2. Insufficient gas pressure. 3. Gas orifice plugged or obstructed. 4. Probe malfunction. 5. Cooking control malfunction. 6. Interface board malfunction.

SOLID STATE CONTROL

The following alarms take precedence over any other controller mode or function.

Alarms	Description
Open Probe	If an open probe is detected, the heat demand (heat on) and basket lift outputs are disabled. Any cooking in progress is canceled, and all operator buttons are disabled. The display shows "Prob," and the electronic alarm will sound continuously. **NOTE:** A temperature of less than 40°F is an open probe equivalent.
Shorted Probe	If a shorted probe is detected, the heat demand (heat on) and basket lift outputs are disabled. Any cooking in progress is canceled, and all operator buttons are disabled. The display shows "HI," and the electronic alarm will sound continuously. **NOTE:** A temperature of 460°F or greater is a shorted probe equivalent.
Hi Temperature	If the temperature is greater than or equal to 415°F, the heat demand (heat on) is disabled. Any cooking in progress is canceled, and all operator buttons are disabled. The display shows "HI," and the electronic alarm will sound continuously. Normal fryer operation resumes when the temperature drops below the high temperature alarm level.
Ignition Status	If this input is not active (24VAC = active), the display will show "FlrE OUt" (for gas pilot out). If the input remains inactive for greater than 90 seconds, the display will show "Ign LoC" (for ignition lockout), the electronic alarm will sound continuously, and the controller will be disabled (all outputs, including heat demand off) until power is cycled.

Alarms	Description
Drain Valve Interlock (DVI)	When drain valve is opened, the DVI switch contacts open, and the 24VAC input to the controller is removed. The heat demand (heat on) and basket lift outputs are disabled. Any cooking in progress is canceled, and all operator buttons are disabled. The display will show "drn" (drain). When the drain valve is closed, the DVI switch contacts close, and the 24VAC input to the controller is restored. The heat demand (heat on) and all operator buttons will remain disabled, and the display will show "FiLL TanH" (fill tank). To resume operation, complete the filtering sequence as follows: Press and hold Filter key for 3 seconds to start the pump motor. When all shortening is returned to the fry tank, press Filter key to stop pump motor. The display alternates in a continuous loop "TanH FULL," "Hlt TEEP" (tank full, hit temp). Press the Temp key. Fryer is now ready for operation.

COMPUTER CONTROL

The following alarms take precedence over any other controller mode or function.

Alarms	Description
Open Probe	If an open probe is detected, the heat demand (heat on) and basket lift outputs are disabled. Any cooking in progress is canceled, and all operator buttons are disabled. The display shows "PROBE OPEN," and the electronic alarm will sound continuously. **NOTE:** A temperature of less than 40°F is an open probe equivalent.
Shorted Probe	If a shorted probe is detected, the heat demand (heat on) and basket lift outputs are disabled. Any cooking in progress is canceled, and all operator buttons are disabled. The display shows "PROBE SHORT," and the electronic alarm will sound continuously. **NOTE:** A temperature of 460°F or greater is a shorted probe equivalent.
Hi Temperature	If the temperature is greater than or equal to 415°F, the heat demand (heat on) is disabled. Any cooking in progress is canceled, and all operator buttons are disabled. The display shows "HIGH TMP," and the electronic alarm will sound continuously. Normal fryer operation resumes when the temperature drops below the high temperature alarm level.
Ignition Status	If this input is not active (24VAC = active), the display will show "PILOT OUT" (for gas pilot out). If the input remains inactive for greater than 90 seconds, the display will show "IGNITION LOCKOUT," the electronic alarm will sound continuously, and the controller will be disabled (all output, including heat demand off) until power is cycled.
Drain Valve Interlock (DVI)	When drain valve is opened, the DVI switch contact open, and the 24VAC input to the controller is removed. The heat demand (heat on) and basket lift outputs are disabled. Any cooking in progress is canceled, and all operator buttons are disabled. The display will show "DRAINING FILTER." If the filter prompt is active (flashing), "DRAINING FILTER" is displayed; if the dispose prompt is active (flashing), "DRAINING DISPOSE" is displayed. When the drain valve is closed, the DVI switch contacts close, and the 24VAC input to the controller is restored. The heat demand (heat on) and all operator buttons will remain disabled, and the display will show "FILL TNK FILTER." To resume operation, complete the filtering sequence as follows: Press and hold Filter key for 3 seconds to start the pump motor. When all shortening is returned to the fry tank, press Filter key to stop te pump motor. Display shows "TNK FULL HIT TEMP." Press the Oil Temp key. Fryer is now ready for operation.

SOLID STATE OR COMPUTER CONTROL HARNESS PIN-OUTS

Pin No.	Input[2]	Pin No.	Output[3]
E1-1	24VAC Hot	E1-8	24VDC (+) Heat Demand
E1-2	24VAC Neutral[1]	E1-9	24VDC (+) Filter
E1-3	Probe	E1-10	24VDC (+) Left Basket Lift
E1-4	Probe	E1-11	24VDC (+) Right Basket Lift
E1-5	Drain Valve Interlock (24VAC) N.O.	E1-12	No connection
E1-6	Ignition Status (24VAC)	—	—
E1-7	Relay DC (-) Common	—	—
NOTES:	**[1] Connected to ground internally.** **[2] Input to cooking control.** **[3] Output to Interface Control Board.**		

INTERFACE CONTROL BOARD PIN-OUTS

Pin. No.	Input	Pin No.	Output
P1	24VDC Left Basket Lift	P6	Heat Demand Triac (24VAC)[2]
P2	24VDC Right Basket Lift	P7	System Ground
P3	24VDC Heat Demand Control	P8	24VAC Left Basket Lift[3]
P4	Common Control (-)	P9	24VAC Right Basket Lift[3]
P5	Heat Demand Triac (24VAC)	P12	24VAC R1 pump motor relay
P10	Relay Contacts (24VAC)[1]		
P11	24VAC K3 Filter Relay		
NOTES:	**[1] Relays connected internally.** **[2] To M1 terminal on gas valve (main).** **[3] To basket lift relay coils.**		

FRYMATE (DUMP STATION) WITH OPTIONAL HEATER

Symptom	Possible Causes
No heat.	1. Unplugged. 2. Power switch off or inoperative. 3. Main circuit breaker off or open. 4. Malfunctioning heater assembly.

KLEENSCREEN FILTERING SYSTEM

Symptom	Possible Causes
Shortening not filtering, pump motor is on.	1. Filter screen is plugged. 2. Clog in filter system lines. **NOTE:** If using solid shortening, when all filtered shortening is returned to the fry tank and filter power switch is off, open the filter drawer approximately 1 inch. Allow the remaining shortening in the line to drain into the filter tank to prevent possible clogging after the shortening cools and solidifies. Close the filter drawer when complete. 3. Shortening below 300°F too thick. 4. R2 fill relay malfunction (N.C. contacts are open). 5. Fill solenoid valve malfunction. 6. Interconnecting wiring malfunction. 7. Pump is inoperative.
Shortening not discarding, pump motor is on.	1. Filter screen plugged. 2. Clog in filter system lines. **NOTE:** If using solid shortening, when all filtered shortening is returned to the fry tank and filter power switch is off, open the filter drawer approximately 1 inch. Allow the remaining shortening in the line to drain into the filter tank to prevent possible clogging after the shortening cools and solidifies. Close the filter drawer when complete. 3. Shortening below 300°F too thick. 4. Discard valve switch malfunction (N.O. contacts not closing to energize R2 relay coil). 5. R2 fill relay malfunction (contacts remain closed). **NOTE:** The fill solenoid valve should not be energized during discard operation so that shortening will flow through manual discard valve only. 6. Discard valve mechanical malfunction. 7. Discard hose connection not fully engaged. 8. Pump is inoperative.
Pump motor is not running to circulate shortening through filtering system, display is lit.	1. Filter key on control panel not pressed or held in long enough to start pump motor (default is 3 sec.). 2. R1 pump motor relay malfunction. 3. Cooking control malfunction. 4. Interface board malfunction. 5. Interconnecting wiring malfunction. 6. Pump motor inoperative.

Symptom	Possible Causes
Pump motor is not running to discard shortening, display is lit.	1. Filter key on control panel not pressed or held in long enough to start pump motor (default is 3 sec.). 2. Discard handle (white) not extended. 3. R1 pump motor relay malfunction. 4. Cooking control malfunction. 5. Interface board malfunction. 6. Interconnecting wiring malfunction. 7. Pump motor inoperative.