SERVICE MANUAL

CEF40/75 FRYER

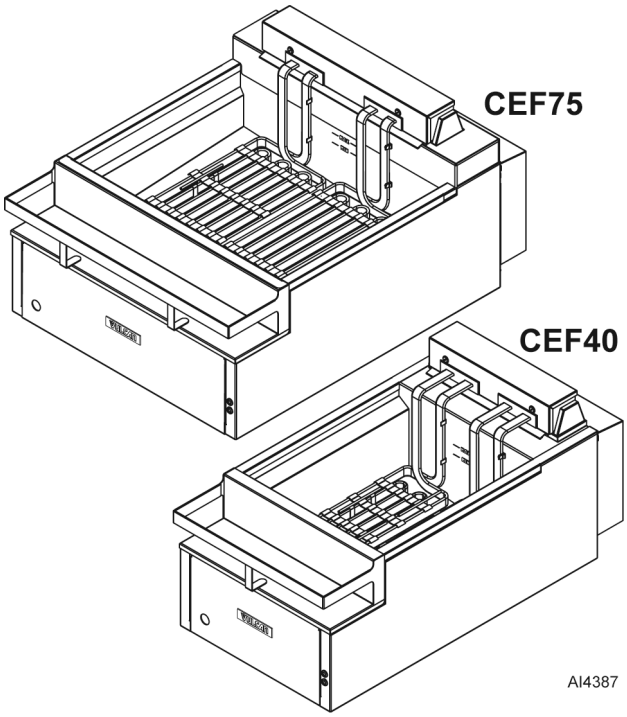

- NOTICE -

This Manual is prepared for the use of trained Vulcan Service Technicians and should not be used by those not properly qualified.

This manual is not intended to be all encompassing. If you have not attended a Vulcan Service School for this product, you should read, in its entirety, the repair procedure you wish to perform to determine if you have the necessary tools, instruments and skills required to perform the procedure. Procedures for which you do not have the necessary tools, instruments and skills should be performed by a trained Vulcan Service Technician.

The reproduction, transfer, sale or other use of this Manual, without the express written consent of Vulcan, is prohibited.

This manual has been provided to you by ITW Food Equipment Group LLC ("ITW FEG") without charge and remains the property of ITW FEG, and by accepting this manual you agree that you will return it to ITW FEG promptly upon its request for such return at any time in the future.

TABLE OF CONTENTS

GENERAL 3
- INTRODUCTION 3
- OPERATION 3
- INSTALLATION 3
- LUBRICATION 3
- CLEANING 3
- SPECIFICATIONS 3
- TOOLS 3

REMOVAL AND REPLACEMENT OF PARTS 4
- ELECTRICAL COVER 4
- BULLNOSE 4
- ELEMENT HEAD COVER 4
- CONTROL BOX ASSEMBLY 5
- CEF CONTROLLER BOARD 6
- ROCKER SWITCH 7
- 24V RELAY 7
- DRAIN VALVE POSITION SENSOR 7
- HEATING ELEMENT 8
- LIFT ASSIST SPRINGS 9
- TEMPERATURE PROBE 10
- HIGH LIMIT TEMPERATURE SWITCH 10
- TILT SWITCH 11
- CONTACTOR 11
- TRANSFORMER 12
- FUSE / FUSE HOLDER 12
- CIRCUIT BREAKER 12

SERVICE PROCEDURES AND ADJUSTMENTS 14
- TEMPERATURE PROBE TEST 14
- TEMPERATURE CONTROL CALIBRATION 14
- HEATING ELEMENT TEST 15
- LIFT SPRING ADJUSTMENT 16

ELECTRICAL OPERATION 17
- COMPONENT FUNCTION 17
- COMPONENT LOCATION 18
- SEQUENCE OF OPERATION 21

WIRING DIAGRAMS 22
- WIRING DIAGRAM 22

TROUBLESHOOTING 25
- ALL MODELS 25

© VULCAN 2017

GENERAL

INTRODUCTION

This Service Manual covers specific service information related to models listed on the front cover. Cooking control features and operation are same for both CEF40 and CEF75. Refer to table below for power requirements and specifications.

Model	Width	Shortening Capacity
CEF40	18"	40 lb.
CEF75	27"	75 lb.

OPERATION

Refer to Operator's Manual (F47660) for operating instructions, located on Vulcan Resource Center at https://my.vulcanfeg.com/resourcecenter/vulcanwolfberkel/default.aspx.

INSTALLATION

Refer to Operator's Manual (F47660) for installation instructions, located on Vulcan Resource Center at https://my.vulcanfeg.com/resourcecenter/vulcanwolfberkel/default.aspx.

LUBRICATION

Refer to Lubrications Manual F20067 for current values.

CLEANING

Refer to Operator's Manual (F47660) for cleaning instructions, located on Vulcan Resource Center at https://my.vulcanfeg.com/resourcecenter/vulcanwolfberkel/default.aspx.

SPECIFICATIONS

Model	Power (kW)	Amps		
		Per Line		
		208V	240V	480V
CEF40	17	47	41	20
CEF75	24	67	58	29
NOTE: Amperage values in table are nominal. Tolerance is +5/-10%				

TOOLS

Standard

- Standard set of hand tools.
- VOM with minimum of NFPA-70E CATIII 600V, UL/CSA/TUV listed. Sensitivity of at least 20,000 ohms per volt and the ability to measure DC micro amps. Meter leads must also be rated at CAT III 600V.
- Clamp-on type amp meter with minimum of NFPA-70E CAT III 600V, UL/CSA/TUV listed
- Temperature tester (thermocouple type).
- ESD (Electrostatic Discharge) Protection Kit.

Special

- Pin extraction tool - Burndy RX2025G1

REMOVAL AND REPLACEMENT OF PARTS

ELECTRICAL COVER



⚠ WARNING Disconnect the electrical power to the machine and follow lockout / tagout procedures.

NOTICE Take care when removing rear electrical cover as it can fall free and pull loose or damage wires.

NOTE: Do NOT remove screws that secure rear panel to chassis.

1. Remove four fasteners and electrical cover (Fig. 1).

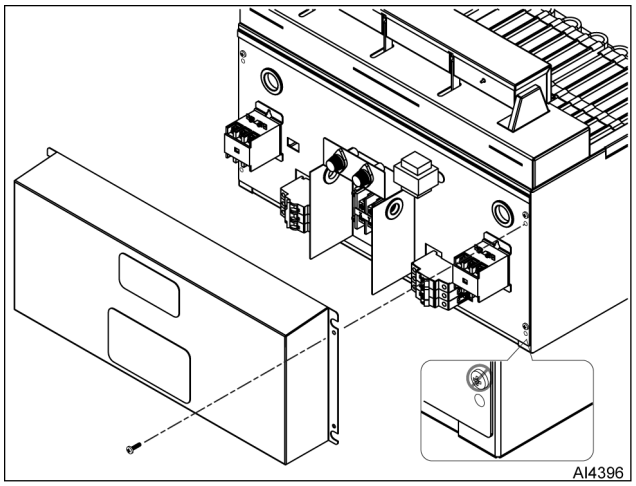

Fig. 1

BULLNOSE



⚠ WARNING Disconnect the electrical power to the machine and follow lockout / tagout procedures.

1. Remove fasteners and bullnose (Fig. 2).

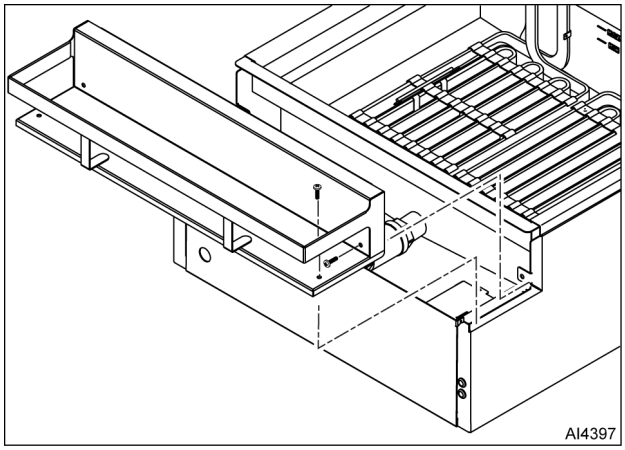

Fig. 2

ELEMENT HEAD COVER



⚠ WARNING Disconnect the electrical power to the machine and follow lockout / tagout procedures.

⚠ WARNING Parts may be hot. Use care when handling them.

1. Drain shortening from fry tank.
2. Remove screws (Fig. 3) from rear of element head assembly.

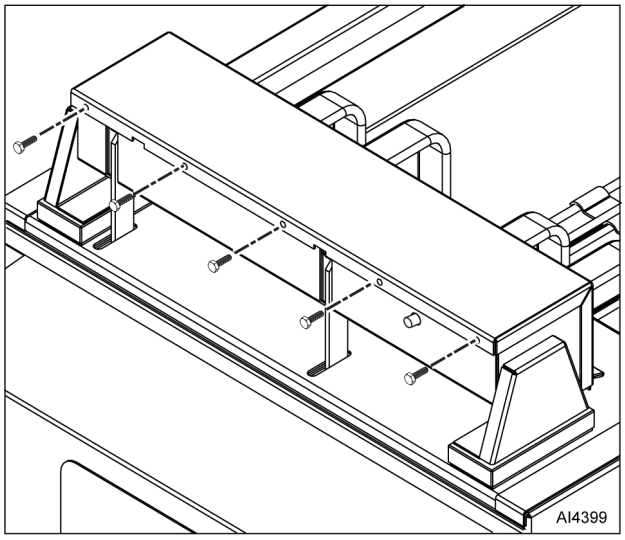

Fig. 3

3. Raise heating elements (Fig. 4) and place 2x4 lumber under them for support.

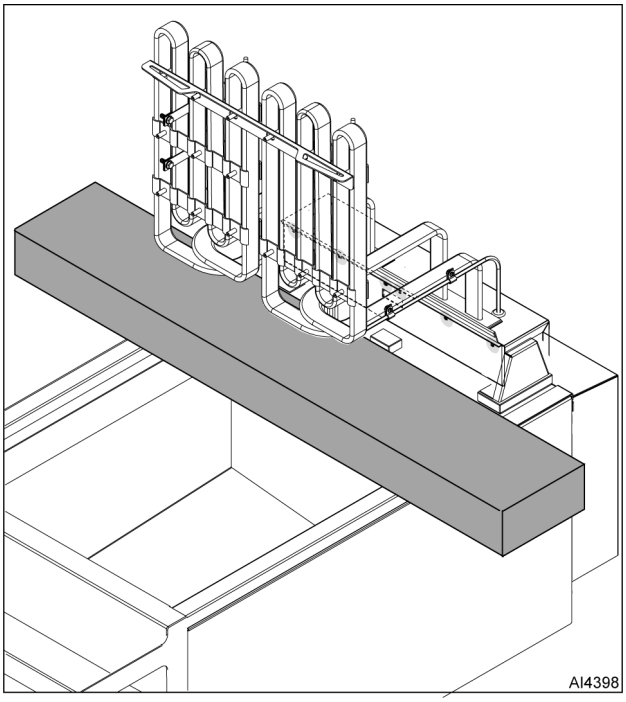

Fig. 4

4. Remove fasteners from element head.
5. Grasp heating elements and pull up. Head cover will separate from element head base.
6. Place heating elements / element head cover on 2x4 lumber.
7. Reverse procedure to install.

CONTROL BOX ASSEMBLY



⚠ WARNING Disconnect the electrical power to the machine and follow lockout / tagout procedures.

1. Remove BULLNOSE .
2. Rotate and lift to remove fryer door plate (Fig. 5).

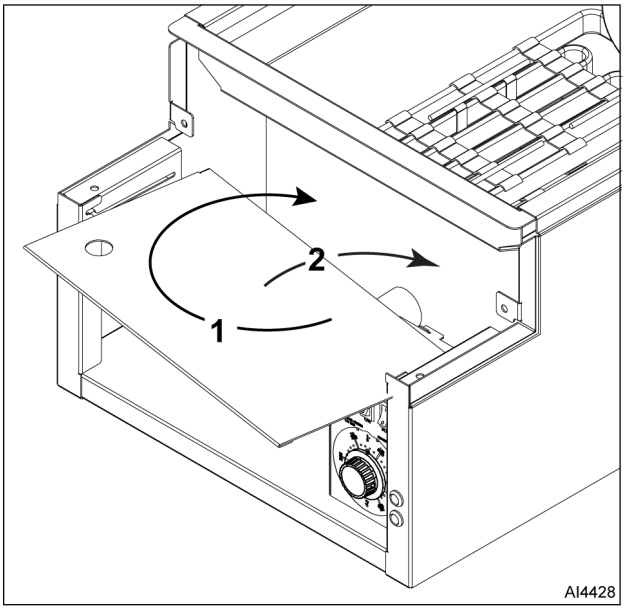

Fig. 5

3. Disconnect harness from connector.
4. Remove two screws (Fig. 6).

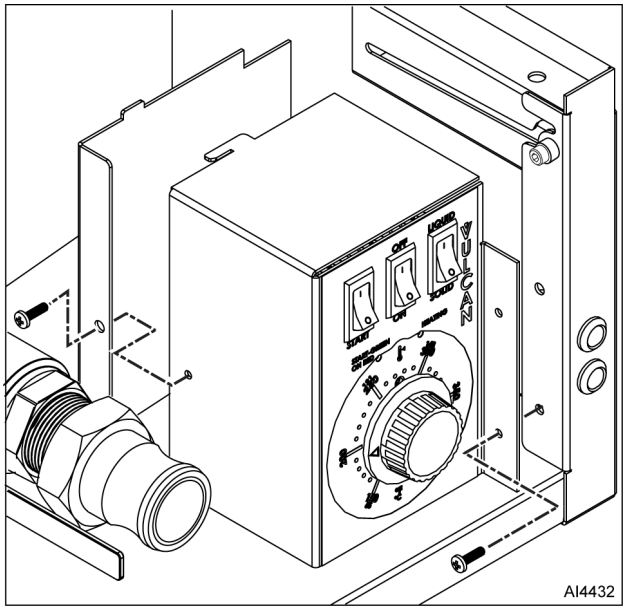

Fig. 6

5. Pull control box assembly away from side wall.

NOTE: Document wire connections.

6. Disconnect wires from indicator lights.
7. Remove screw and back from control box assembly.
8. Reverse procedure to install.

CEF CONTROLLER BOARD



⚠ WARNING Disconnect the electrical power to the machine and follow lockout / tagout procedures.

1. Remove CONTROL BOX ASSEMBLY.
2. Remove control knob (Fig. 7).

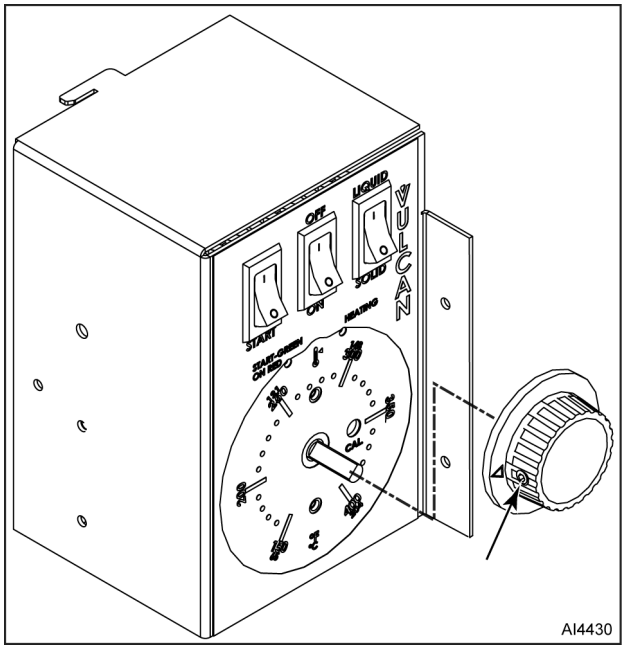

Fig. 7

NOTE: Wires do not have to be disconnected from relay.

3. Remove nuts and relay (Fig. 8).

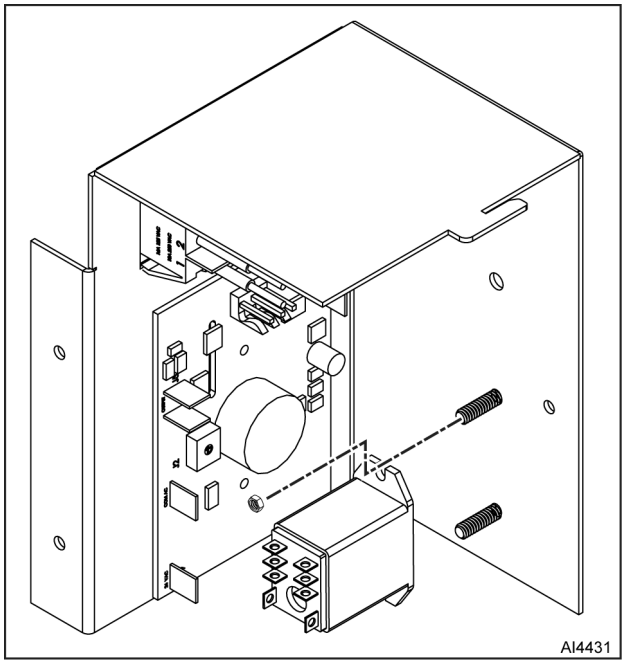

Fig. 8

4. Disconnect wires from CEF controller board (Fig. 9).

Connector	Wire
Jx	Switches (E1 and E3 Connectors)
J2	39
J3	56
J5	66
J6	5
J7	6
J9	66

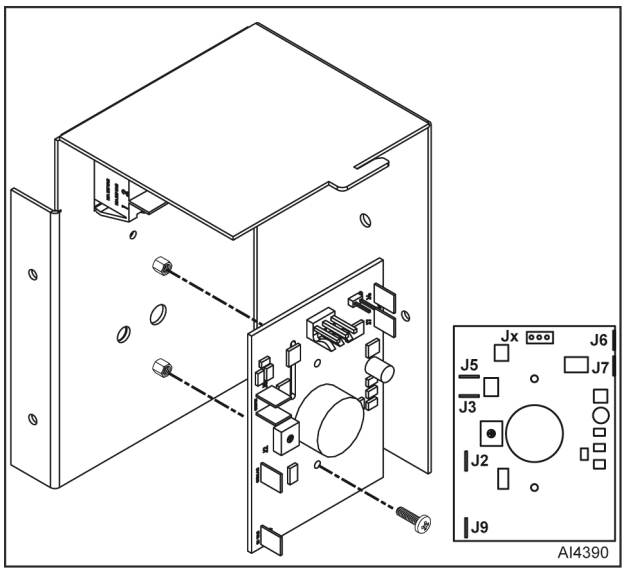

Fig. 9

5. Remove screws, stand-offs, and CEF controller board.
6. Reverse procedure to install.

ROCKER SWITCH



⚠ WARNING Disconnect the electrical power to the machine and follow lockout / tagout procedures.

NOTE: There are three rocker switches. Replacement procedure is same for all.

1. Remove CONTROL BOX ASSEMBLY.
2. Disconnect rocker switch from harness.
3. Remove rocker switch (Fig. 10) from control box assembly.

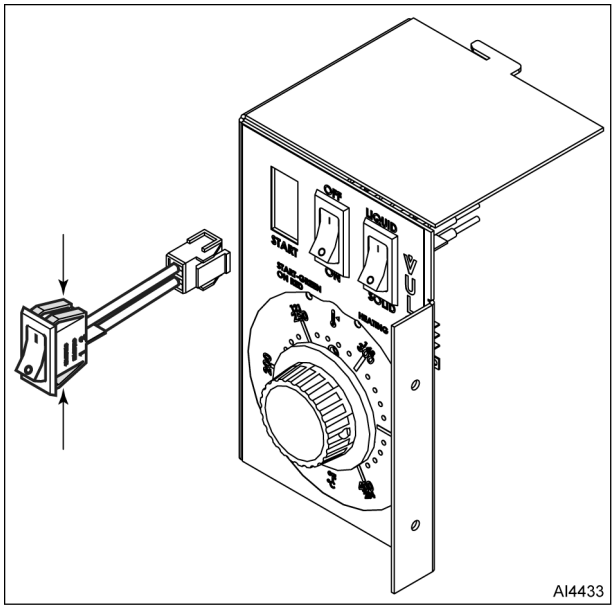

Fig. 10

4. Reverse procedure to install.

24V RELAY



⚠ WARNING Disconnect the electrical power to the machine and follow lockout / tagout procedures.

1. Remove CONTROL BOX ASSEMBLY.
2. Disconnect wires from relay (Fig. 11).

Pin	Wire
1	NC
2	NC
3	63
4	NC
5	65
6	NC
7	56
8	42

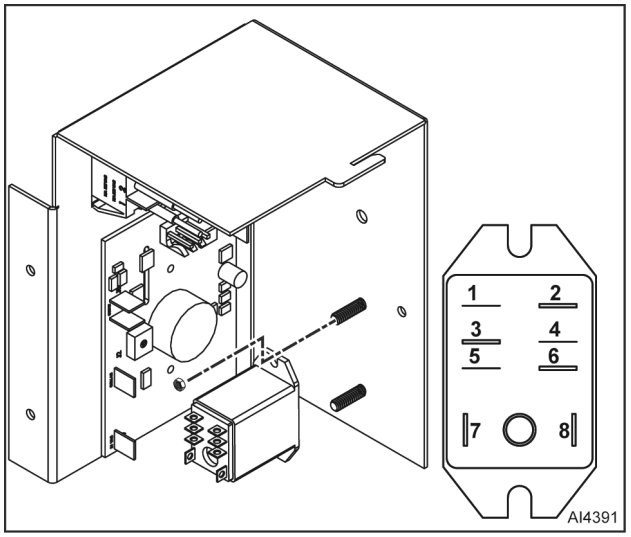

Fig. 11

3. Remove nuts and relay.
4. Reverse procedure to install.

DRAIN VALVE POSITION SENSOR



⚠ WARNING Disconnect the electrical power to the machine and follow lockout / tagout procedures.

1. Remove BULLNOSE .
2. Rotate and lift to remove fryer door plate (Fig. 12).

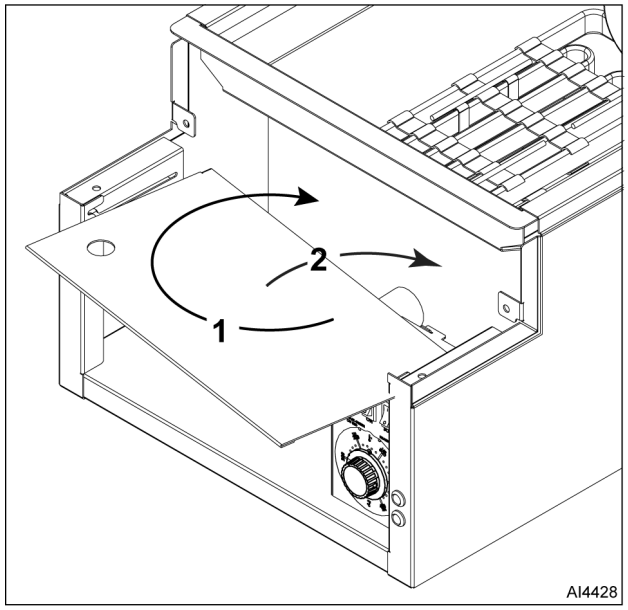

Fig. 12

NOTE: Connector is located under cable shield.

3. Disconnect position sensor connector (2, Fig. 13) from harness.
4. Remove cable ties and position sensor cable from cable shield.
5. Remove two screws, nuts, and position sensor (1).
6. Reverse procedure to install.

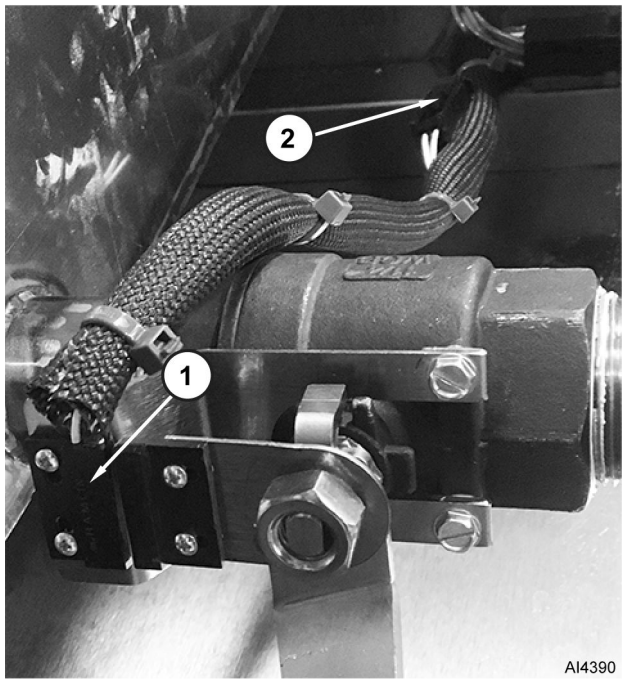

Fig. 13

HEATING ELEMENT



⚠ WARNING Disconnect the electrical power to the machine and follow lockout / tagout procedures.

⚠ WARNING Parts may be hot. Use care when handling them.

NOTICE Do not sharply bend, kink, or clamp down on high limit switch probe capillary tube or damage may occur.

1. If replacing left heating element:
   A. Remove nuts.
   B. Move temperature probe / clamps (1, Fig. 14) away from element.

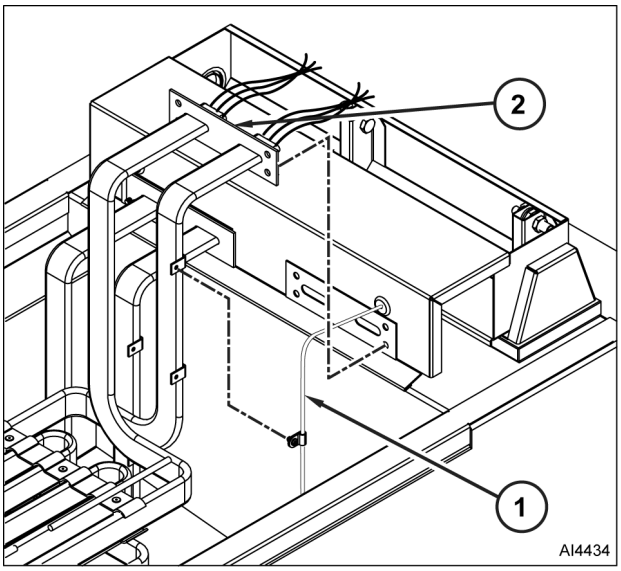

Fig. 14

2. If replacing right heating element:
   A. Remove nuts.
   B. Move high temperature switch probe / clamps away from element.
3. Remove ELEMENT HEAD COVER .

NOTE: Each heating element assembly contains three individual elements (six lead wire connections total). Document wire connections.

4. Disconnect heating element (2, Fig. 14) lead wires.
5. Remove screws and heating element.

6. Remove nuts and clamps (Fig. 15) from element assembly.

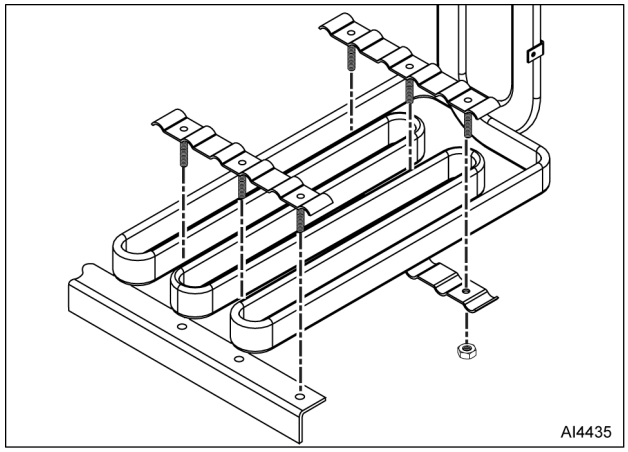

Fig. 15

NOTE: When installing high limit switch probe, route capillary tube and center bulb between clamps before tightening.

7. Reverse procedure to install.

LIFT ASSIST SPRINGS



⚠ WARNING Disconnect the electrical power to the machine and follow lockout / tagout procedures.

⚠ WARNING Heating elements may be hot. Use care when handling them.

NOTE: If one spring breaks, replace both springs.

NOTE: Heating elements are to remain upright through entire procedure.

1. Raise heating elements (1, Fig. 16) and place 2x4 lumber (2) under them for support.
2. Remove ELECTRICAL COVER .
3. Remove screws and electrical panel (3, Fig. 16).

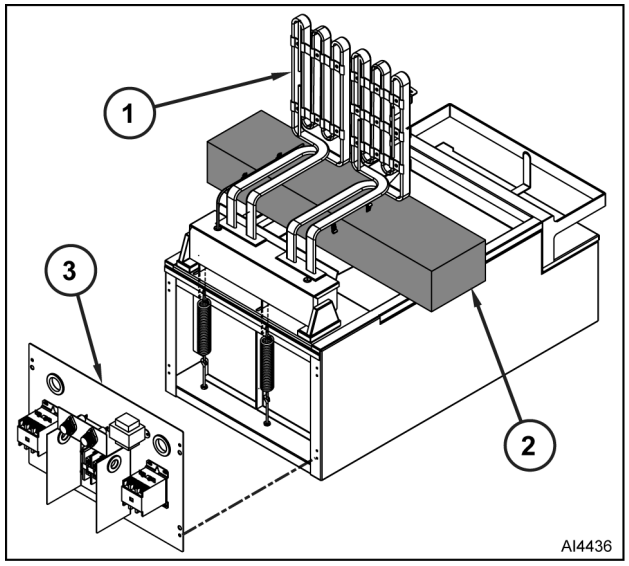

Fig. 16

4. Loosen all eye bolt mounting nuts (1, Fig. 17) to release tension on springs.
5. Remove lift assist spring (4, Fig. 17) from eye bolt hooks (2).
6. Remove lift assist spring from hanger (3, Fig. 17).

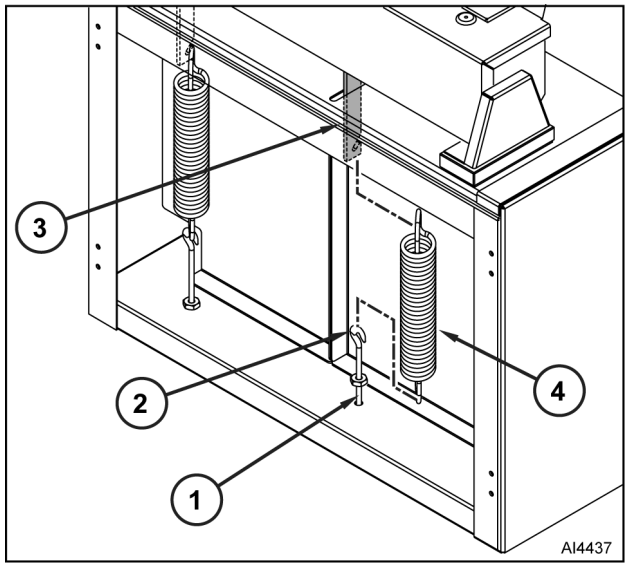

Fig. 17

NOTE: Leave electrical panel and electrical cover off.

7. Reverse procedure to install.
8. Perform LIFT SPRING ADJUSTMENT.
9. Install electrical panel and ELECTRICAL COVER .

TEMPERATURE PROBE



⚠ WARNING Disconnect the electrical power to the machine and follow lockout / tagout procedures.

⚠ WARNING Parts may be hot. Use care when handling them.

1. Raise heating elements.
2. Remove ELEMENT HEAD COVER .
3. Disconnect temperature probe lead wires.
4. Remove clamps / temperature probe (Fig. 18) from heating element.

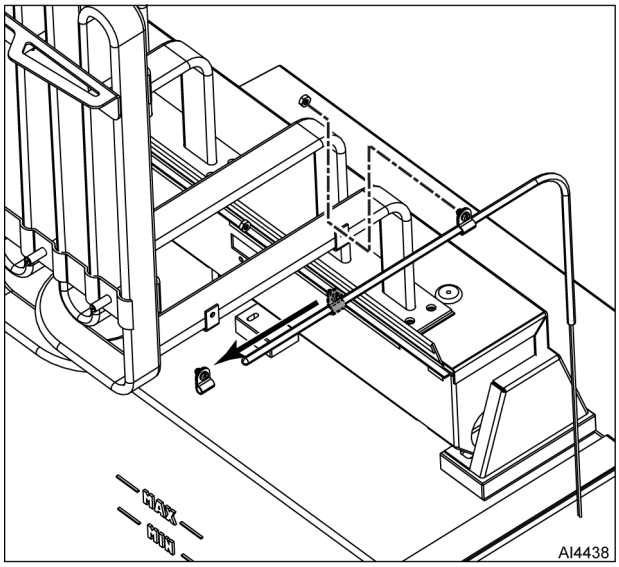

Fig. 18

5. Remove clamps from temperaure probe.
6. Remove temperature probe from element head assembly.

NOTE: Ensure grommet remains in place when inserting temperature probe into element head assembly.

7. Reverse procedure to install.
8. Check TEMPERATURE CONTROL CALIBRATION.

HIGH LIMIT TEMPERATURE SWITCH



⚠ WARNING Disconnect the electrical power to the machine and follow lockout / tagout procedures.

⚠ WARNING Parts may be hot. Use care when handling them.

1. Raise heating elements.

NOTICE Do not sharply bend and kink or clamp down on capillary tube or damage may occur.

2. Open clamps (2, Fig. 19) and remove loop clamps (3) and capillary tube / bulb (1) from heating element.

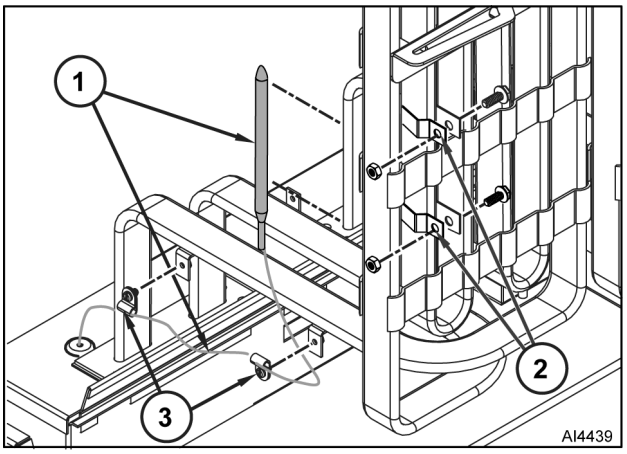

Fig. 19

3. Remove ELEMENT HEAD COVER .
4. Remove high limit switch (1, Fig. 20) from mounting bracket.

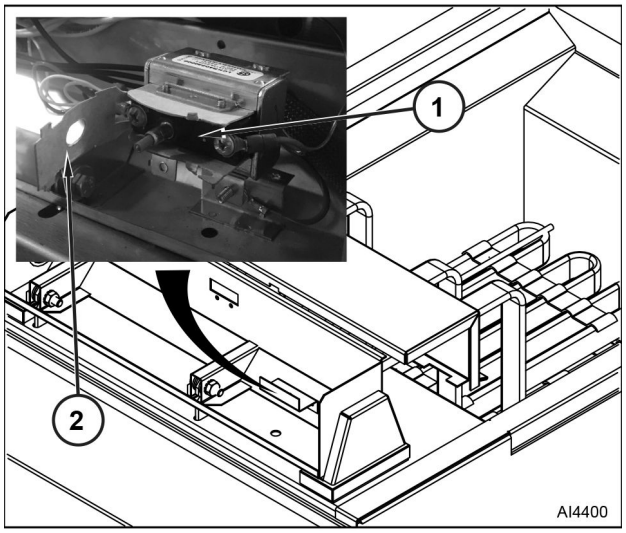

Fig. 20

5. Carefully open cardboard cover (2).

NOTE: Document wire connections.

6. Disconnect wires from high limit switch.
7. Remove grommet from element head assembly.
8. Remove bulb, capillary tube, and high limit switch from element head assembly.

NOTE: Slide grommet onto capillary tube then insert grommet into hole in element head assembly.

NOTE: Make sure all electrical wires are clear of high limit switch.

9. Reverse procedure to install.

TILT SWITCH



⚠ WARNING Disconnect the electrical power to the machine and follow lockout / tagout procedures.

1. Remove ELEMENT HEAD COVER .
2. Disconnect tilt switch lead wires.
3. Remove tilt switch (Fig. 21) from element head assembly.

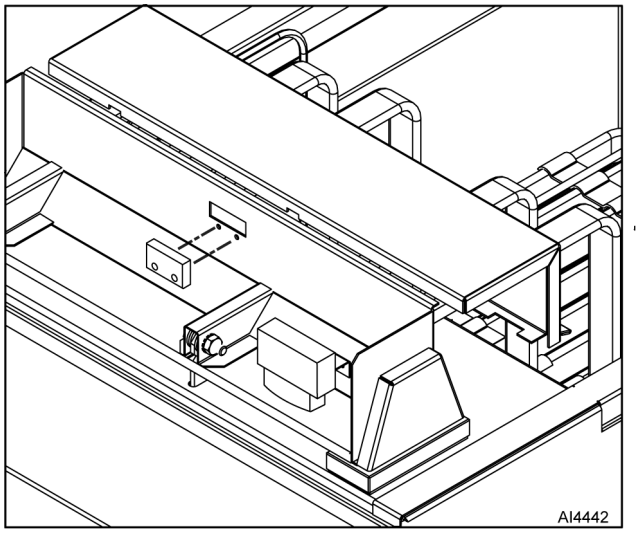

Fig. 21

4. Reverse procedure to install.

CONTACTOR



⚠ WARNING Disconnect the electrical power to the machine and follow lockout / tagout procedures.

1. Remove ELECTRICAL COVER .

NOTE: Document wire connections.

2. Disconnect wires from contactor (Fig. 22).

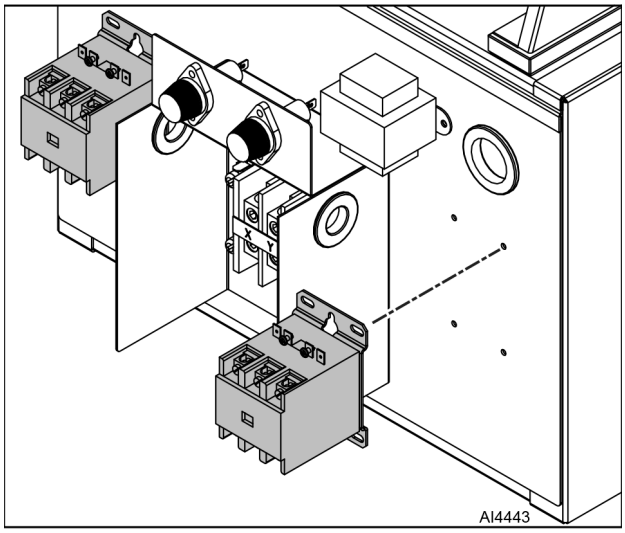

Fig. 22

3. Remove screws and contactor.

NOTICE Leave 1/8" exposed wire showing at contactor power terminal connections (Fig. 23) to prevent capture of wire insulation. Capture of insulation at power connections can lead to overheating and premature failure.

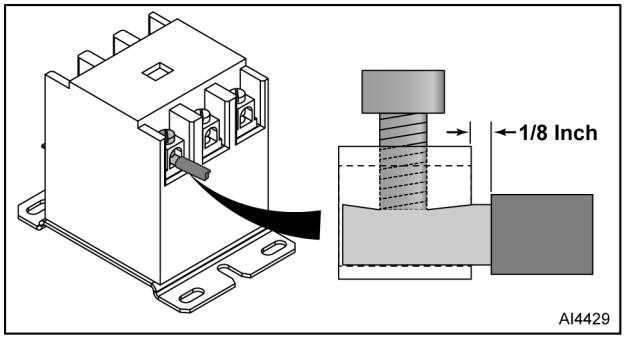

Fig. 23

4. Reverse procedure to install.

TRANSFORMER



⚠ WARNING Disconnect the electrical power to the machine and follow lockout / tagout procedures.

1. Remove ELECTRICAL COVER .

NOTE: Document wire connections.

2. Disconnect wires from transformer (Fig. 24).

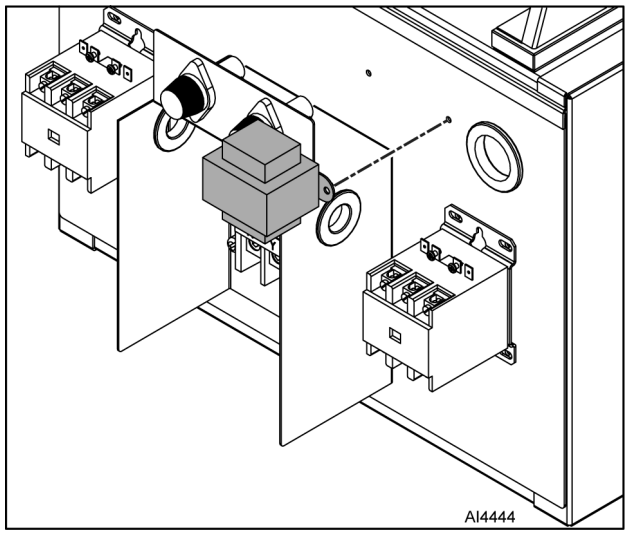

Fig. 24

3. Remove screws and trasformer.
4. Reverse procedure to install.

FUSE / FUSE HOLDER



⚠ WARNING Disconnect the electrical power to the machine and follow lockout / tagout procedures.

1. Replace fuse:
   A. Remove fuse access cover.
   B. Remove fuse cap and fuse.

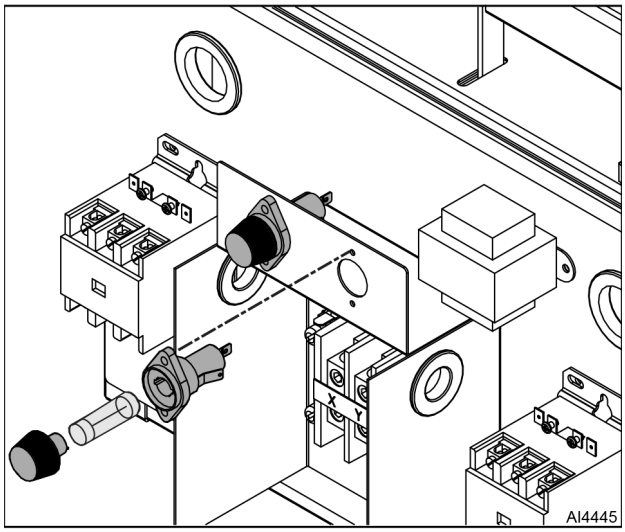

Fig. 25

   C. Reverse procedure to install.

2. Replace fuse holder:
   A. Remove ELECTRICAL COVER .

NOTE: Document wire connections.

   B. Disconnect wires from fuse holder.
   C. Remove screws, nuts, and fuse holder.
   D. Reverse procedure to install.

CIRCUIT BREAKER



⚠ WARNING Disconnect the electrical power to the machine and follow lockout / tagout procedures.

NOTE: Only CEF75 fryers have circuit breakers.

1. Remove ELECTRICAL COVER .

NOTE: Document wire connections.

2. Disconnect wires from circuit breaker (Fig. 26).

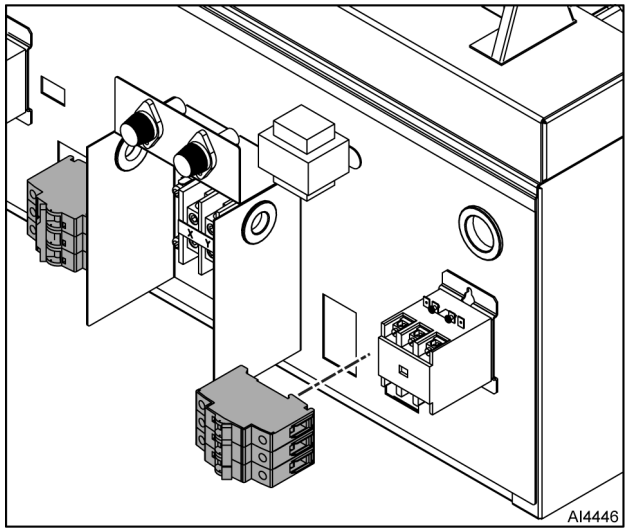

Fig. 26

3. Slide out circuit breaker retaining clips.
4. Remove circuit breaker from chassis.
5. Reverse procedure to install.

SERVICE PROCEDURES AND ADJUSTMENTS

TEMPERATURE PROBE TEST

Temperature probe is a thermistor type RTD (resistance temperature device). As temperature increases, resistance value decreases.

Probe Fault

If a temperature probe fault occurs, a red diagnostic LED on control PCB (inside control box assembly) will flash. In addition, contactors used to power heating elements will open. A temperature probe fault can be caused by a lead wire break or a lead short.

To reset control circuit, cycle power. If problem still exists, refer to TROUBLESHOOTING

Check probe as follows:

1. Turn power switch off.
2. Access CONTROL BOX ASSEMBLY.
3. Disconnect proble leads from controller board T6 and T7.
4. Measure shortening temperature.
5. Use a VOM to measure probe resistance.
   A. Connect meter leads to probe leads. If measured resistance value is within range, probe is functioning properly.
   B. If measured resistance value is outside of range, perform following:
      1) Remove ELEMENT HEAD COVER .
      2) Remove wire nuts and measure probe resistance.
         - If measured resistance value is within range, check wire connections between probe and control board.
         - If measured resistance value is outside of range, replace TEMPERATURE PROBE

Temperature °F	Resistance Ω
77	90 - 110K
212	5,016 - 6,130
275	1,804 - 2,204
300	1,254 - 1,534
350	646 - 790
392	391 - 478

TEMPERATURE CONTROL CALIBRATION

1. Verify condition of temperature probe as outlined under TEMPERATURE PROBE TEST.

NOTE: The level must be between MIN & MAX fill lines before proceeding.

2. Check shortening level in fry tank.
3. Allow shortening to cool below 300°F.
4. Place a thermocouple in fry tank geometric center, one inch below shortening surface.
5. Set the cooking control to 350°F.
6. Turn fryer on.
7. Monitor HEATING light as fryer cycles on and off.

NOTE: Stir shortening to eliminate any cold zones.

   A. Allow heat to cycle three times to stabilize shortening temperature.
   B. Record meter reading from thermocouple when current cycles off and on for at least two complete heating cycles.

8. Calculate average temperature by adding temperature reading when heat goes off to temperature reading when the heat comes on and divide by 2.

   [Temp. (Heat off) + Temp. (Heat on)] ÷ 2 = Average Temp.

   Example: 360° + 340° ÷ 2 = 350°F. The average temperature should be 350°F (± 5°F).

   A. If the average temperature reading is within tolerance, cooking control is properly calibrated.

NOTE: Ensure that the shaft and knob position does not change when loosening set screw and removing temperature knob, as this could affect calibration.

   B. If the average temperature reading is out of tolerance, loosen set screw to remove temperature knob and adjust calibration potentiometer.
   C. Adjust calibration potentiometer clockwise to increase temperature / counterclockwise to decrease temperature.
   D. If over 25° of adjustment is necessary, replace cooking control.

9. Repeat average temperature calculation for up to three attempts. Allow the cooking control to cycle at least two times between adjustments before performing the calculation.
10. If calibration is unsuccessful, cooking control may be malfunctioning and cannot be adjusted properly. Install a replacement cooking control and check calibration.

HEATING ELEMENT TEST

MODEL	VOLTAGE	TOTAL KW	AMPS PER ELEMENT	OHMS PER ELEMENT
CEF40	208 /3 Phase	17	13.5	15.5
	240 / 3 Phase		11.6	20.5
	480 / 3 Phase		5.8	82.3
CEF75	208 /3 Phase	24	19.2	10.8
	240 / 3 Phase		16.7	14.4
	480 / 3 Phase		8.3	57.6

NOTES:

1. Values in the table are nominal. Tolerance is +5/-10%.
2. Resistance values (ohms) are @ room temperature.
3. There are **3** elements per firebar, **6** elements per tank.



⚠ WARNING Disconnect the electrical power to the machine and follow lockout / tagout procedures.

1. Remove ELEMENT HEAD COVER .

NOTICE Heating elements must remain submerged in shortening while performing this test or damage may occur.

2. Access heating element lead wire connections at wire nuts.
3. Re-connect power, turn power switch on and set cooking control to call for heat.
4. Measure voltage at heating element connections and verify against data plate voltage.
   A. If voltage is incorrect, see TROUBLESHOOTING (Table 11).

NOTE: This method is preferred over a resistance check when a clamp on type amp meter is available.

   B. If voltage is correct, check current draw (amps) through the heating element lead wires. See table for proper values.
      - If current draw is correct, heating element is functioning properly.
      - If current draw is incorrect, replace HEATING ELEMENT

5. Measure heating element resistance.



⚠ WARNING Disconnect the electrical power to the machine and follow lockout / tagout procedures.

NOTE: If unable to check current draw, a resistance check may indicate a malfunctioning element.

   A. Turn power switch off and disconnect power to machine.
   B. Allow heating elements to cool to room temperature.
   C. Remove wire nuts from heating element lead wire connections and separate lead wires.
   D. Check resistance (ohms). See table for proper values.

NOTE: Resistance values are provided for elements at room temperature.

6. Restore operational condition and check for proper operation.

LIFT SPRING ADJUSTMENT



⚠ WARNING Disconnect the electrical power to the machine and follow lockout / tagout procedures.

1. Check spring tension:
   A. Raise heating elements to full up position. Elements should remain in place.
   B. Lower heating elements to full down position. Elements should remain in place.
   C. If elements remain in place as described, then no adjustment is necessary. If elements do not remain in place, continue with procedure for adjustment.
2. Adjust spring tension:

NOTICE Take care when removing rear electrical cover as it can fall free and pull loose or damage wires.

   A. Remove ELECTRICAL COVER .
   B. Remove screws and back panel.
   C. Loosen stop nut on all eye bolts.
   D. Adjust eye bolt mounting nuts as necessary, but equally on all springs to achieve the best spring tension to hold elements in place.
   E. Repeat Step 1 as necessay until spring tension is acceptable.
   F. Tighten stop nut on all eye bolts.
3. Reinstall back panel and electrical cover.

ELECTRICAL OPERATION

COMPONENT FUNCTION

Control Box Assembly	Contains components used to set and control temperature.
Start Switch	Engages contactors to supply power to heating elements.
Power Switch	Supplies power to control circuit for fryer operation.
Melt Switch	Selects type of shortening being used (liquid/ solid).
Start-On Indicator Light	Green LED located on control box assembly. Indicates start switch has been pressed.
Heating Indicator Light	Yellow LED located on control box assembly. Indicates heating elements are on or off. LED cycles on and off.
Temperature Knob	Used to set the desired operational temperature.
Chassis ON Indicator Light	Green lamp located on right-side of chassis. Indicates power switch has been pressed.
Chassis HEAT indicator Light	Yellow lamp located on right-side of chassis. Indicates if heating elements are on or off. Lamp will cycle on and off.
Drain Valve	Used to drain tank.
Drain Valve Switch . . .	Magnetic reed switch mounted on drain valve. 24VAC power to temperature controller board passes through switch. When drain valve is open, 24VAC power is removed from temperature controller board. This prevents heating elements from being energized when valve is open.
Heating Element	Used to heat shortening. Cycles on and off as to maintain desired temperature.
High Temperature Limit Switch	Used to limit operational temperature. Opens and removes power if shortening temperature exceeds 460°F. It has a pushbutton switch that must be pushed to reset it. The switch cannot be reset until shortening temperature drops below 415°F. It is wired in series with tilt switch and removes power from power contactor coil when open.
Tilt Switch	Magnetic switch mounted underneath element head assembly. Monitors heating elements position (lowered [closed] or raised [open]).It is wired in series with high temperature switch and removes power from power contactor coil when open.
Temperature Sensor	Monitors shortening temperature.
Fuse	Protects fryer electrical circuits from damage.
Heat Relay	Supplies power to heat contactor coil.
Contactor	Controls power to heating elements.
Transformer	Provides 24VAC operational power to control box assembly / control circuit.
Circuit Breaker*	Protects fryer electrical circuits from damage.
Terminal Block	Connects factility power to unit.

*CEF75 Only

COMPONENT LOCATION

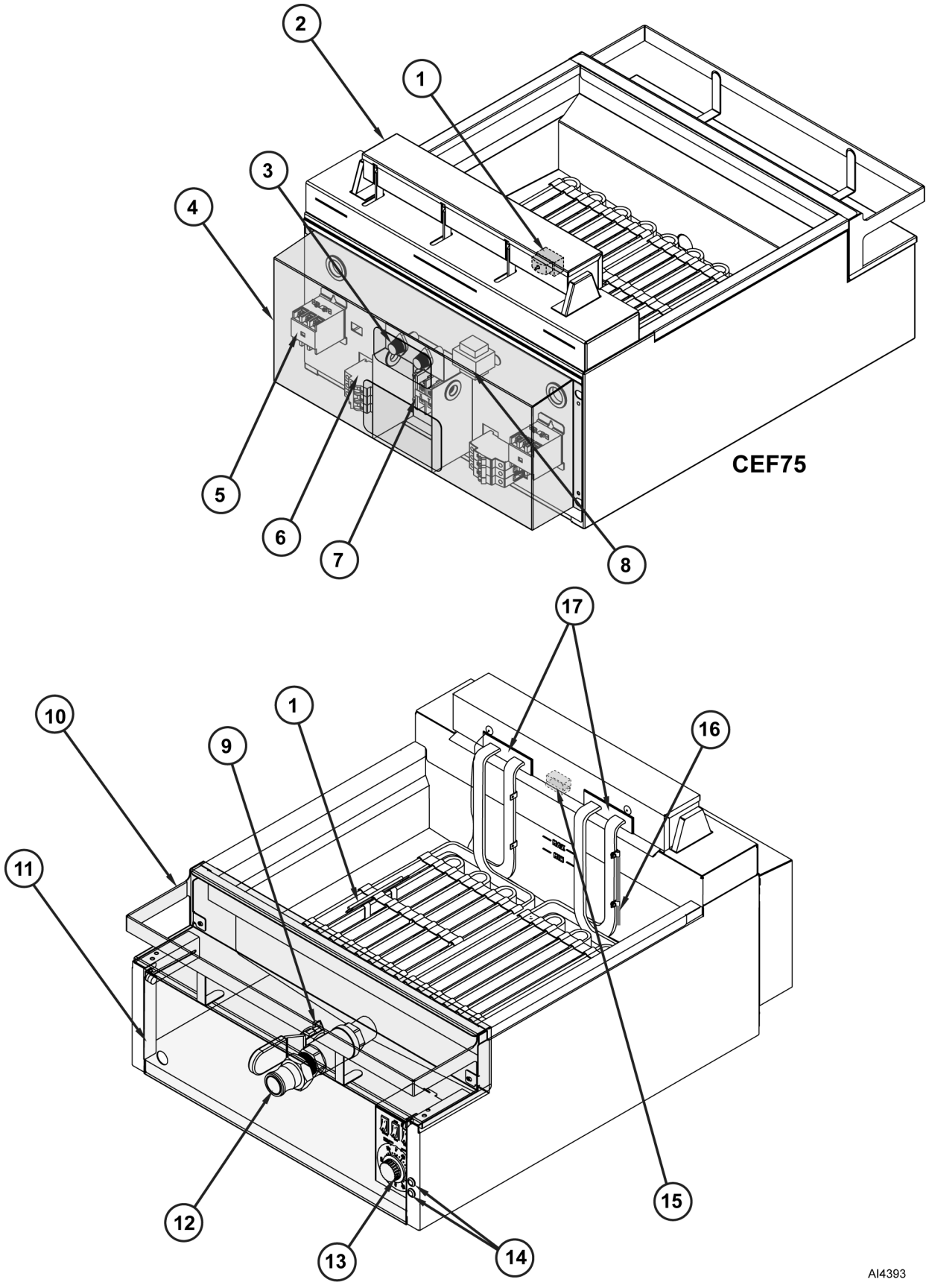

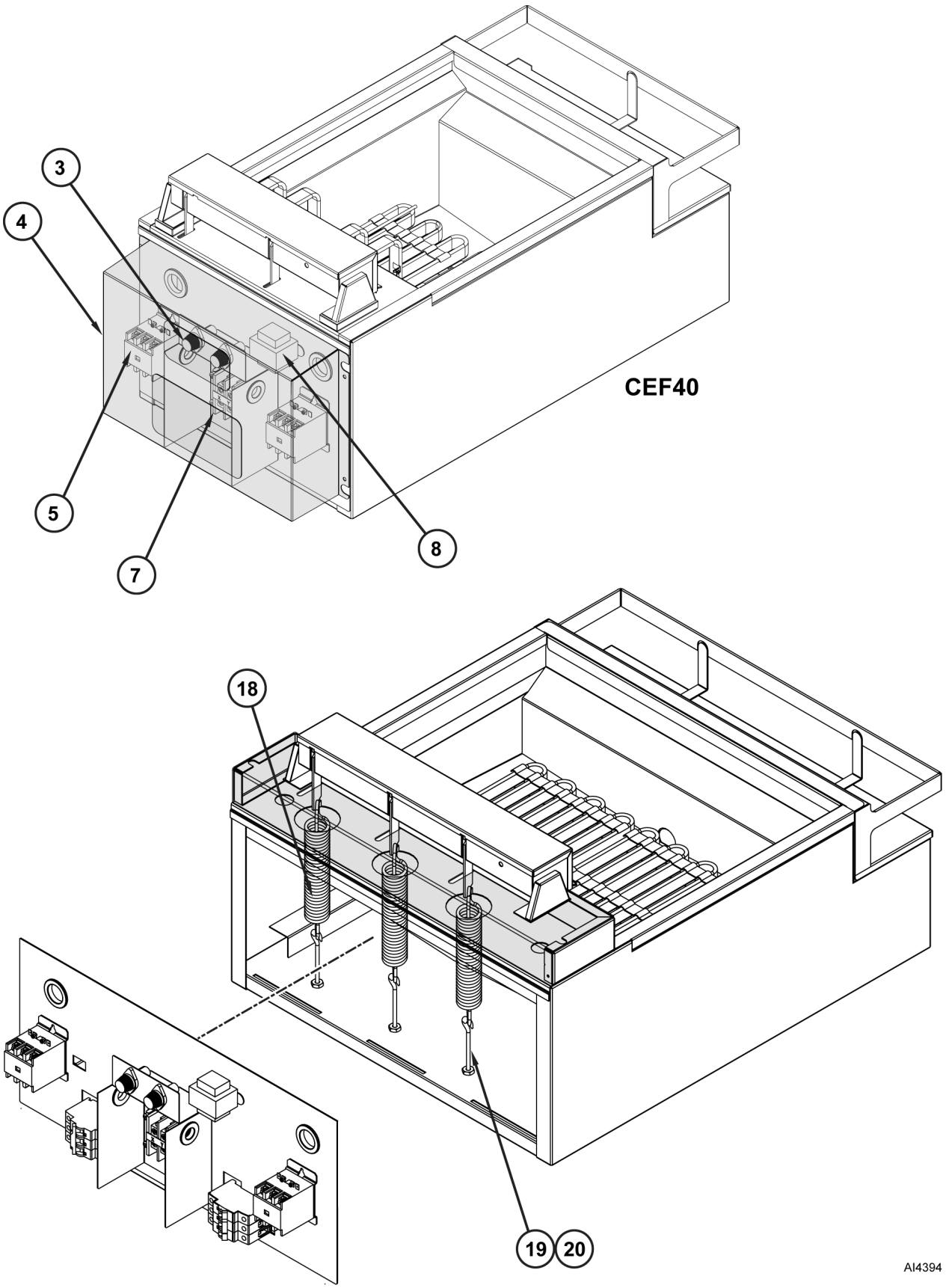
3
4
5
7
8
CEF40
18
19
20
AI4394

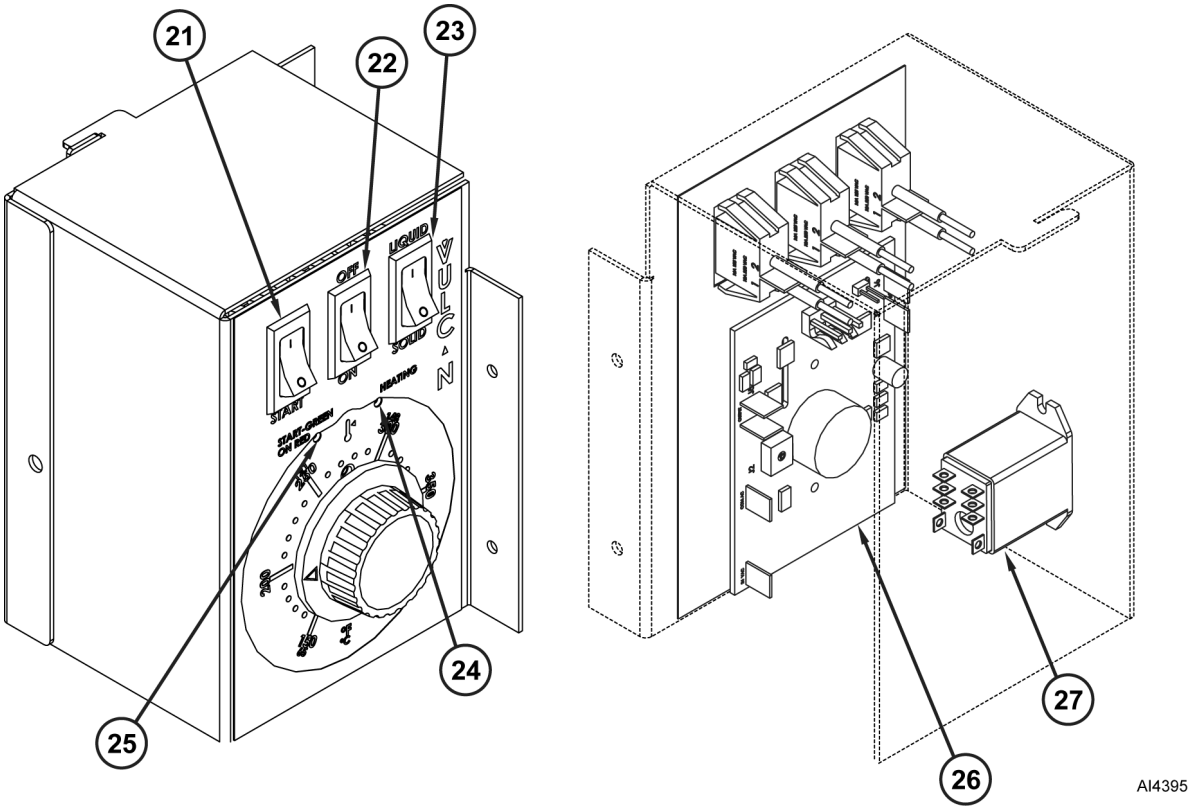

Item Number	Component
1	High Limit Switch
2	Head Element Cover
3	Fuses / Fuseholders
4	Electrical Cover
5	Contactors
6	Circuit Breakers (CEF75 Only)
7	Terminal Block
8	Transformer
9	Drain Valve Switch
10	Bullnose
11	Fryer Door Plate
12	Drain
13	Control Box Assembly
14	Operation Indicators
15	Tilt Switch
16	Temperature Sensor
17	Heating Elements
18	Lift Assist Springs
19	Eyehooks
20	Jam Nuts

Item Number	Component
21	START Rocker Switch
22	ON/OFF Rocker Switch
23	MELT Rocker Switch
24	HEATING LED
25	Control Knob
26	POWER LED
27	Control Board
28	24V Relay

SEQUENCE OF OPERATION

1. Conditions
   - Fryer connected to correct supply voltage and is properly grounded.
   - Power switch off.
   - Shortening at proper level in fry tank.
   - MELT switch set to type of shortening in use.
   - Manual drain valve closed.
   - Tilt switch contacts closed.
   - High limit switch closed.
2. Set power switch to ON.
   A. Supply voltage supplied to power contactor coil via high temperature limit and tilt switch.
   B. Supply voltage provided to transformer.
   C. Transfromer supplies power to cooking control via drain switch.
3. Press START switch.
   A. If shortening temperature is below set point,T5 output on controller sends 24VAC to coil on heat relay via wire 56.
   B. Heat relay is energized and sends power to heat contactor coil and elements are powered.
4. Shortening reaches set temperature.
   A. Controller de-activates 24 VAC output from T5 via wire 56 to heat relay coil.
   B. Heat relay coil is denergized, power is cut to heat contactor coil and power is removed from elements.
   C. If temperature is below 135 degrees, melt sequence will begin. Heating elements will cycle off and on in timed intervals (according to MELT switch setting) until shortening temperature surpasses 135°F.
5. Cooking control cycles heat output on shortening temperature until one of following occurs:
   - Power switch is turned off.
   - Heating elements are raised.
   - Over-temperature condition occurs.
6. Over-temperature condition / operation.
   A. Shortening temperature exceeds 460°F.
   B. High limit switch opens.
   C. Contactors de-energize.
   D. Power is removed from heating elements.
   E. Contactors remain de-energized until:
      - Shortening temperature drops below 415°F.
      - High limit switch manual reset button is pushed.
      - Start switch is pressed.

WIRING DIAGRAMS

WIRING DIAGRAM

CEF40 Wiring Diagram (208V / 240V) 11 x 17

CEF75 Wiring Diagram (208V / 240V) 11 x 17

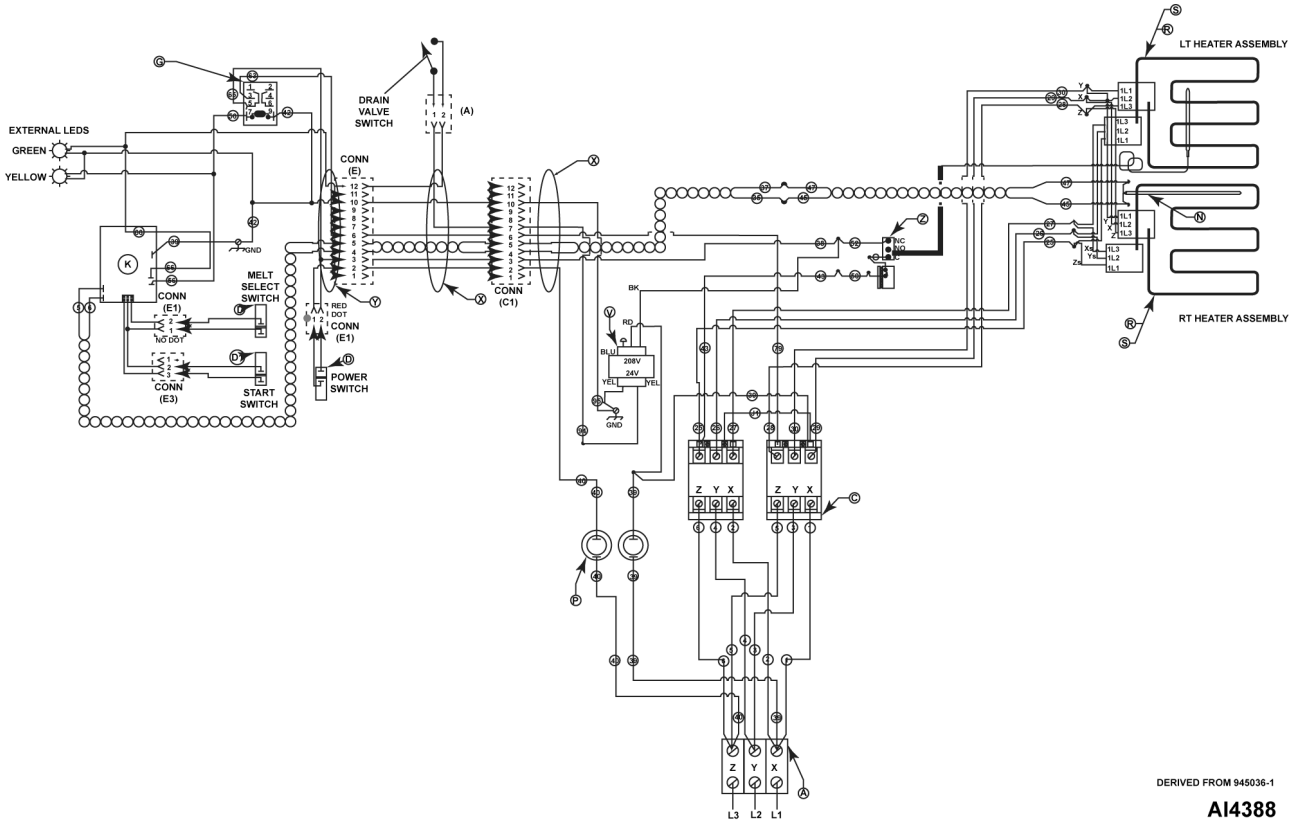

CEF40 Wiring Diagram (208V / 240V)

Item	Nomenclature
A	Terminal Block
B	Terminal Barrier Strip
C	3P, 50A, 230V Contactor
D	Rocker Switch Assembly
D1	Rocker Switch Assembly - Start
G	24V DPDT Relay
K	Temperature Control
N	Thermistor Probe
P	Fuse / Fuse Holder
R	Electrical Box Pigtail
S	8.5 kW Heating Element

Item	Nomenclature
T	460°F High Limit Switch
V	208-240V / 24V, 40VA Transformer
X	Control Box Power Harness
Y	Control Box Harness
Z	Tilt Switch

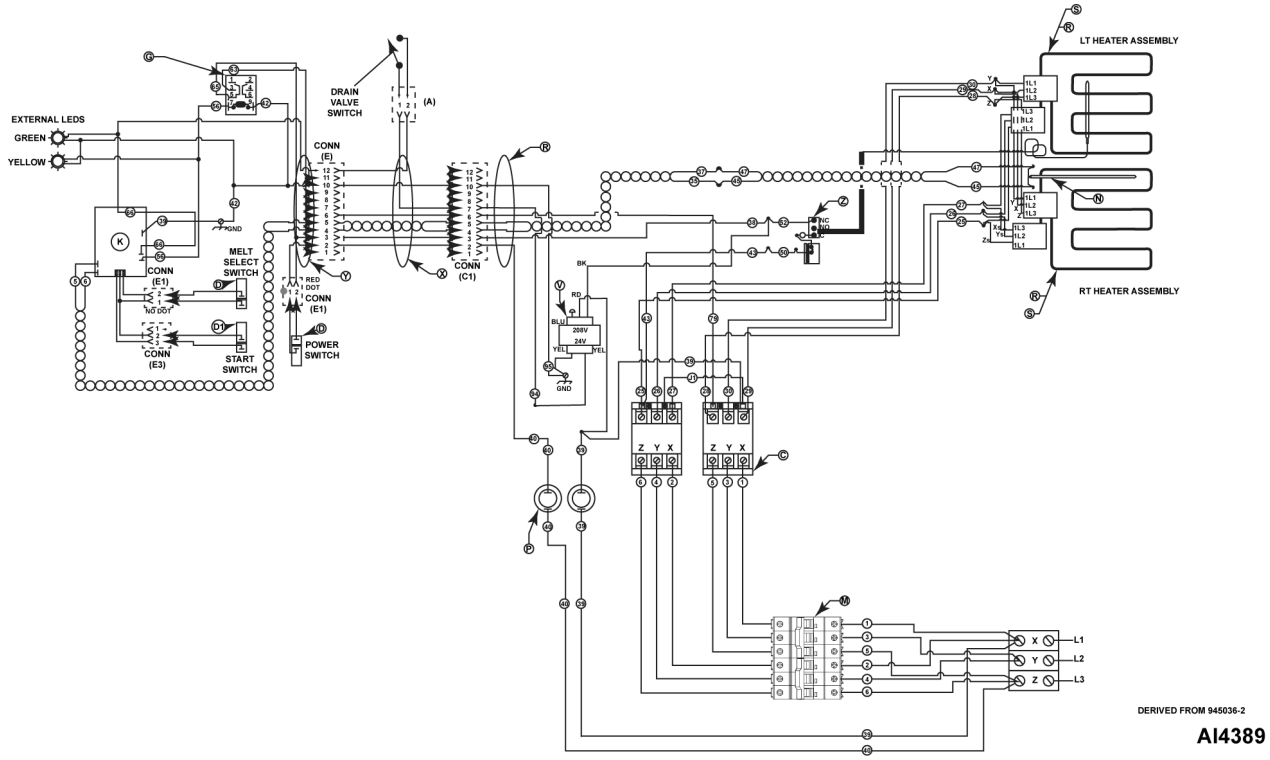

CEF75 Wiring Diagram (208V / 240V)

Item	Nomenclature
A	Terminal Block
B	Terminal Barrier Strip
C	3P, 50A, 230V Contactor
D	Rocker Switch Assembly
D1	Rocker Switch Assembly - Start
G	24V DPDT Relay
K	Temperature Control
M	50A Circuit Breaker
N	Thermistor Probe
P	Fuse / Fuse Holder
R	Electrical Box Pigtail
S	8.5 kW Heating Element
T	460°F High Limit Switch

Item	Nomenclature
V	208-240V / 24V, 40VA Transformer
X	Control Box Power Harness
Y	Control Box Harness
Z	Tilt Switch

TROUBLESHOOTING

ALL MODELS

Troubleshooting Chart	
Problem	**Probable Cause**
No Heat	1. Power switch not turned on.
	2. Start switch not depressed.
	3. Control box assembly malfunction.
	4. Contactor(s) malfunction.
	5. Loose wire connections.
	6. High temperature switch activated.
	7. Fuse(s) open.
	8. Facility power removed from fryer.
	9. Transfomer failed.
	10. Heating element(s) failure.
	11. Tilt switch malfunction / elements not fully lowered.
	12. Heat relay malfunction.
	13. Circuit breaker(s) open (CEF75 Only).
Insufficent Heat	1. Contactor(s) malfunction.
	2. Loose wire connections.
	3. Temperature probe malfunction.
	4. Control box assembly malfunction.
	5. Heating element malfunction.