PARTS AND SERVICE MANUAL
GAS INFRARED CHARBROILER

ITW Food Equipment Group

VULCAN

MODELS

VTEC14
VTEC25
VTEC36
VTEC48
VTEC60



VTEC48

©ITW Food Equipment Group, LLC
3600 North Point Blvd.
Baltimore, MD 21222

RETAIN THIS MANUAL FOR FUTURE USE

FORM F38333A (05-26)

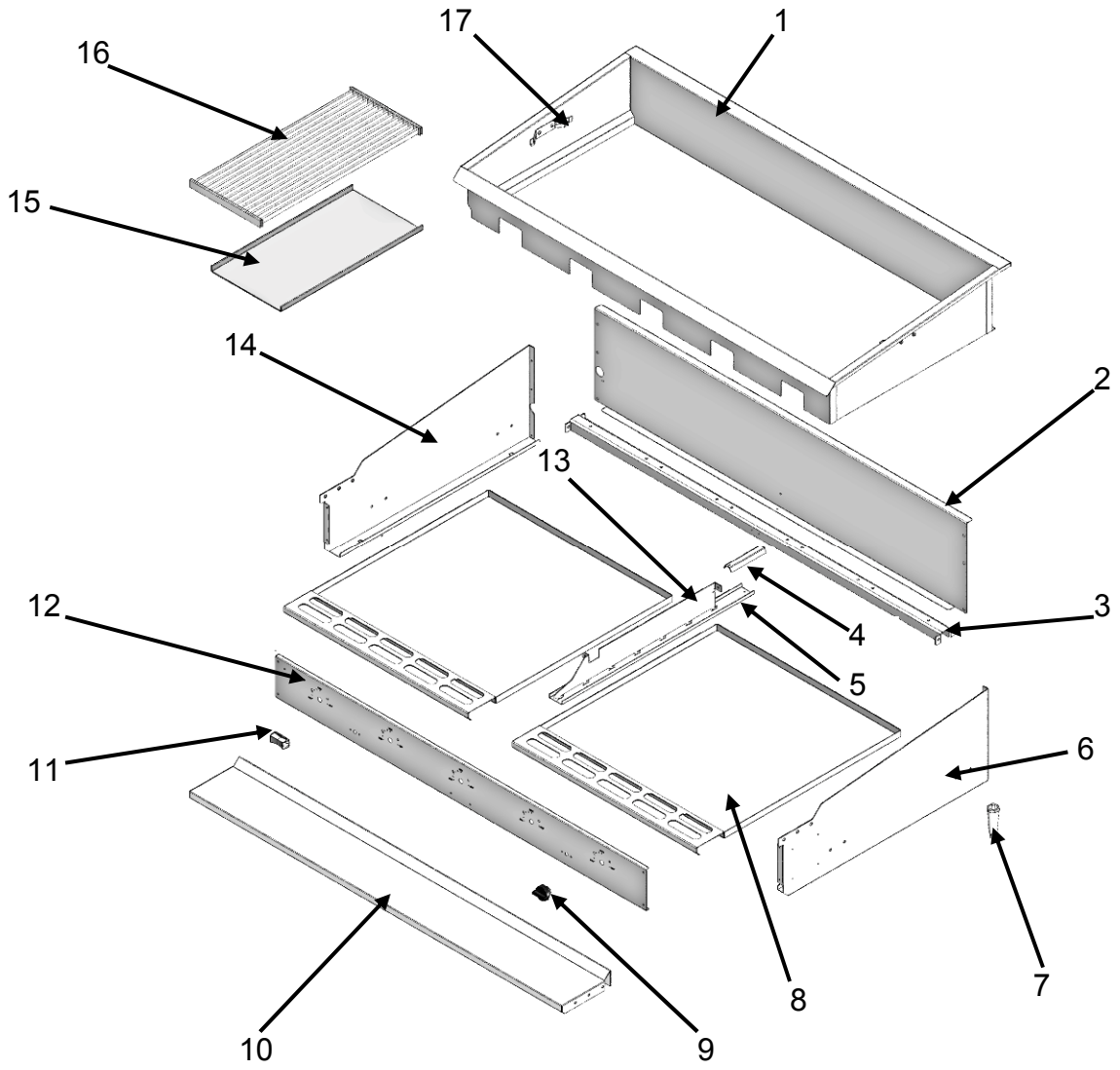

ILLUSTRATION NO.	PART NO.	NAME OF PART	AMOUNT
1.....	00-944240-0014A....	VTEC14 inner shield assembly..	1
	00-944240-0025A....	VTEC25 inner shield assembly..	1
	00-944240-0036A....	VTEC36 inner shield assembly..	1
	00-944240-0048A....	VTEC48 inner shield assembly..	1
	00-944240-0060A....	VTEC60 inner shield assembly..	1
2.....	00-944236-00014....	VTEC14 back panel.....	1
	00-944236-00025....	VTEC25 back panel.....	1
	00-944236-00036....	VTEC36 back panel.....	1
	00-944236-00048....	VTEC48 back panel.....	1
	00-944236-00060....	VTEC60 back panel.....	1

ILLUSTRATION NO.	PART NO.	NAME OF PART	AMOUNT
3	00-944241-00014	VTEC14 burner support bracket.	2
	00-944241-00025	VTEC25 burner support bracket.	2
	00-944241-00036	VTEC36 burner support bracket.	2
	00-944241-00048	VTEC48 burner support bracket.	2
	00-944241-00060	VTEC60 burner support bracket.	2
4	00-944253-00000	Crumb tray bracket deflector	AR
5	00-944252-00000	Crumb tray bracket base	AR
6	00-944238-R000A	Right side panel assembly	1
7	00-719260-00000	Leg	4
	00-9444412	Leg (After 2017)	4
8	00-944247-0014A	VTEC14 crumb tray	1
	00-944247-0025A	VTEC25 crumb tray	1
	00-944247-0036A	VTEC36 crumb tray	1
	00-944247-0024A	VTEC48 crumb tray	2
	00-944247-0030A	VTEC60 crumb tray	2
9	00-944254-00000	Igniter knob	AR
10	00-944233-0014A	VTEC14 shelf	1
	00-944233-0025A	VTEC25 shelf	1
	00-944233-0036A	VTEC36 shelf	1
	00-944233-0048A	VTEC48 shelf	1
	00-944233-0060A	VTEC60 shelf	1
11	00-413157-00001	Knob – chrome plated	AR
12	00-944237-00014	VTEC14 front panel	1
	00-944237-00025	VTEC25 front panel	1
	00-944237-00036	VTEC36 front panel	1
	00-944237-00048	VTEC48 front panel	1
	00-944237-00060	VTEC60 front panel	1
13	00-944251-00000	Crumb tray bracket	1
14	00-944238-L000A	Left side panel assembly	1
15	00-944244-00000	Emitter panel	AR
16	00-944245-0000A	Standard grate	AR
	00-944245-000FA	Fish grate	AR
17	00-944239-00000	Grate bracket	2

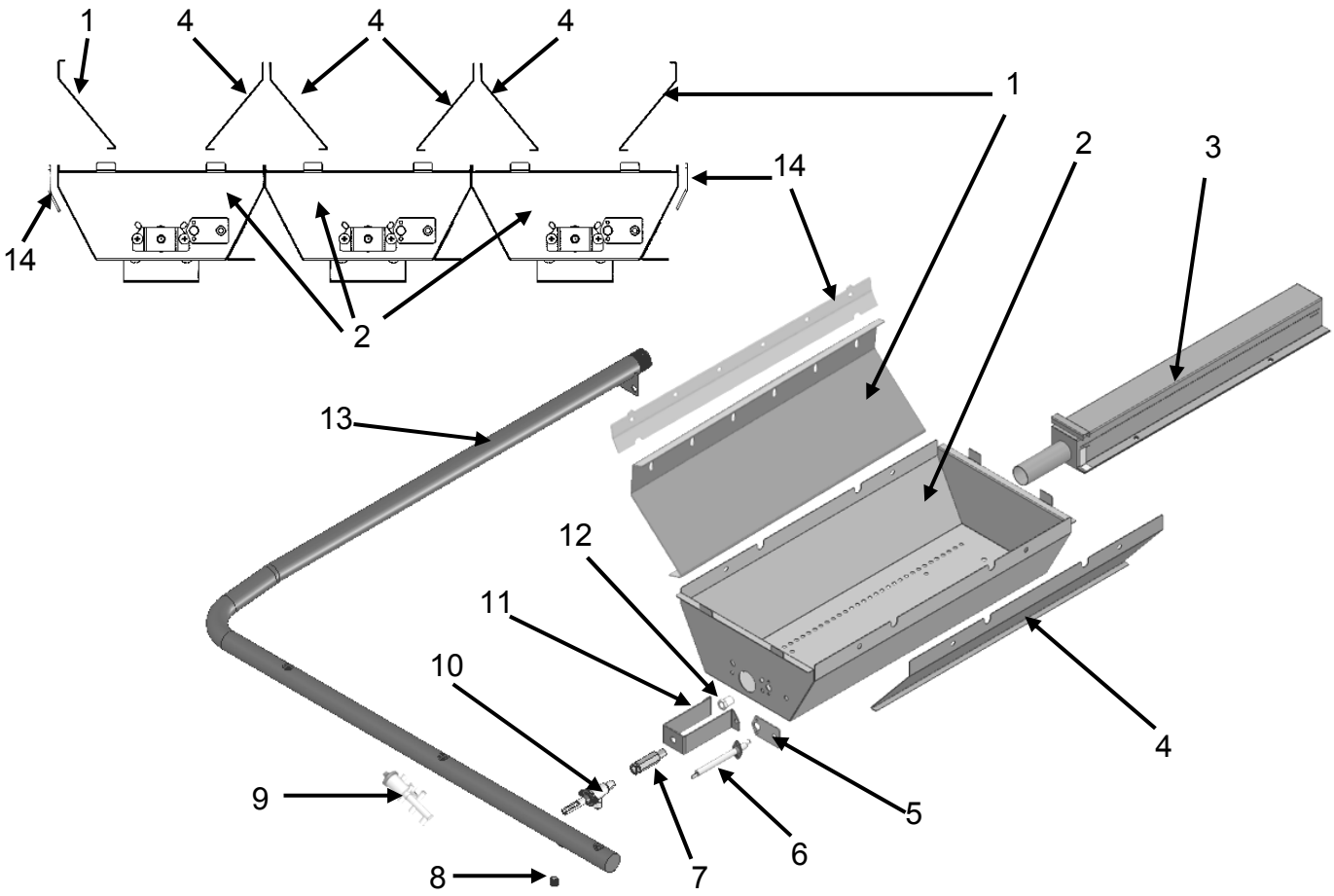

ILLUSTRATION NO.	PART NO.	NAME OF PART	AMOUNT
1.....	00-944246-0002S....	Outside burner-outside reflector.	2
2.....	00-944246-0000A....	Burner box (with orifice bracket)	.....AR
3.....	00-944250-0000A....	VTEC burner.....	.....AR
4.....	00-944246-00002....	Inside burner-inside reflector.....	.....AR
5.....	00-944249-00001.....	Igniter electrode bracket.....	.....AR
6.....	00-944249-00000.....	Igniter electrode.....	.....AR
7.....	00-926523-00000.....	2.125” orifice extension.....	.....AR
8.....	00-719363-00000.....	1/8 NPT countersink plug.....	1
9.....	00-944255-00000.....	Rotary igniter.....	.....AR
10.....	00-944243-00000.....	Burner valve.....	.....AR
11.....	00-944265.....	Knob, VTEC Broiler.....	.....AR
12.....	00-719951-00043	Natural gas burner orifice.....	.....AR
	00-719951-00054	LP gas burner orifice.....	.....AR

ILLUSTRATION NO.	PART NO.	NAME OF PART	AMOUNT
13	00-944235-0014A	VTEC14 Manifold	1
	00-944235-0025A	VTEC25 Manifold	1
	00-944235-0036A	VTEC36 Manifold	1
	00-944235-0048A	VTEC48 Manifold	1
	00-944235-0060A	VTEC60 Manifold	1
14	00-944263-00000	Burner reinforcement bracket	2
Not Shown	00-944256-00010	10” igniter wire	AR
Not Shown	00-944256-00018	18” igniter wire	AR
Not Shown	00-408279-00026	Natural gas pressure regulator	1
Not Shown	00-408279-00021	LP gas pressure regulator	1
Not Shown	00-944257-00000	Stainless steel grate scraper	1
Not Shown	00-944276-00000	Igniter grounding wire	AR

RECOMMENDED SPARE PARTS

PART NO.	NAME OF PART	AMOUNT
00-408279-00026	Natural gas pressure regulator	1
00-408279-00021	LP gas pressure regulator	1
00-413157-00001	Knob – chrome plated	2
00-944254-00000	Igniter knob	1
00-944255-00000	Rotary igniter	1
00-944256-00010	10” igniter wire	1
00-944256-00018	18” igniter wire	1
00-944249-00000	Igniter electrode	2
00-944244-00000	Emitter panel	2
00-926523-00000	2.125” orifice extension	2
00-944243-00000	Burner valve	2
00-719951-00043	Natural gas burner orifice	2
00-719951-00054	LP gas burner orifice	2

SERVICE

INTRODUCTION

This manual is prepared for the use of trained service technicians and should only be used by those who are properly qualified. This manual is not intended to be all encompassing. You should read, in its entirety, the repair procedure you wish to perform to determine if you have the necessary tools, instruments and skills required to perform the procedure. Procedures for which you do not have the necessary tools, instruments and skills should not be attempted.

Procedures in this manual will apply to all VTEC models unless specified. Pictures and illustrations can be of any model unless the picture or illustration needs to be model specific.

INSTALLATION

Generally, installations are made by the dealer or contracted by the dealer or owner. Detailed installation instructions are included in the Installation and Operation Manual that is sent with each unit. However, it should be noted that an improperly installed unit, can lead to premature component failures and poor performance. All VTEC models must be installed with an externally mounted regulator.

OPERATION

Detailed operation instructions are included in the Installation & Operation Manual sent with each unit and are also available at www.vulcanequipment.com .

CLEANING

Detailed cleaning procedures are included in the Installation & Operation manual sent with each unit. All places where oil, grease or food can accumulate must be kept clean at all times.

LUBRICATION

All valves, at the first sign of sticking, should be lubricated by a trained technician using high temperature grease. Frequency will be largely dependent on customer usage.

SPECIFICATIONS

All VTEC models are equipped with rotary, piezo spark igniters and 22,000 BTU/HR burners as standard equipment. One burner is used for every 12 inches of broiling surface. The VTEC does not utilize pilots; the burners ignite directly from the peizo igniters or manually via an outside ignition source. Natural gas models are to operate at 4.0" W.C. manifold pressure and LP models at 10.0" W.C. manifold pressure with all burners on.

⚠ WARNING **The charbroiler and its parts are hot. Use care when operating, cleaning or servicing the charbroiler.**

⚠ WARNING **Shut off the gas supply before servicing the unit.**

GAS PRESSURE MEASUREMENT

1. Turn the main gas shut-off valve and the individual burner control knobs to the OFF position.

2. Remove crumb tray. Remove pressure tap plug underneath manifold pipe at right. Fig. 1.

3. Attach manometer at pressure tap point.

4. Turn main gas shut-off ON ,Ignite all burners and leave on MAX setting while checking gas pressure. See I&O Manual F-38330.

5. Turn all the equipment on the same supply line on.

6. Gas pressure should be 4" W.C for natural gas units and 10" W.C. for LP gas units.

7. Turn the main gas shut-off valve and the individual burner control knobs to the OFF position (clockwise until stops).

8. Disconnect manometer and reinstall pressure tap plug and crumb tray.

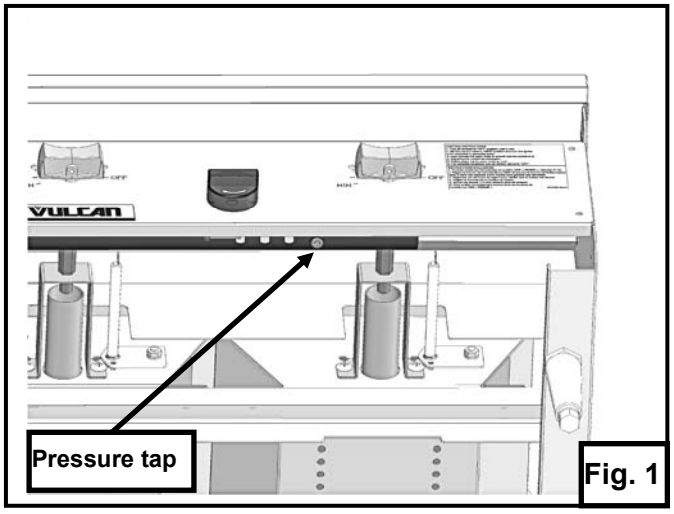

Fig. 1

NOTICE All gas supply connections and any pipe joint compound must be resistant to the action of propane gases.

⚠ WARNING **Prior to lighting, check all joints in the gas supply line for leaks. Use soap and water solution. Do not use an open flame.**

GAS PRESSURE REGULATOR

A gas pressure regulator is supplied with the charbroiler and should be set at 4" Water Column (W.C.) for natural gas, and 10" W.C. for propane gas. Minor adjustments may be required based on site specific gas pressure.

The regulator should be installed as close to the charbroiler on the gas supply line as possible. Make sure that the arrow on the underside of the regulator is oriented in the

direction of gas flow to the broiler (Fig. 3) and the regulator is positioned with the vent limiter and adjustment screw cover upright (Fig. 4). The vent limiter should be kept free of grease and debris to prevent clogging and poor performance.

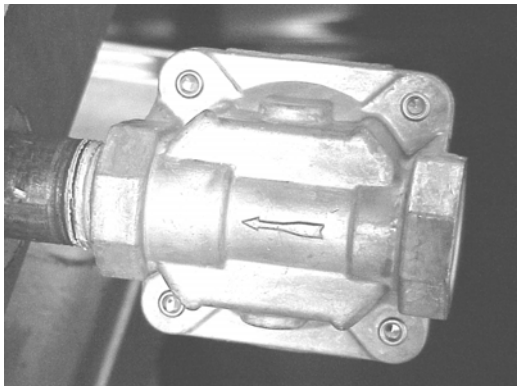

Fig. 3

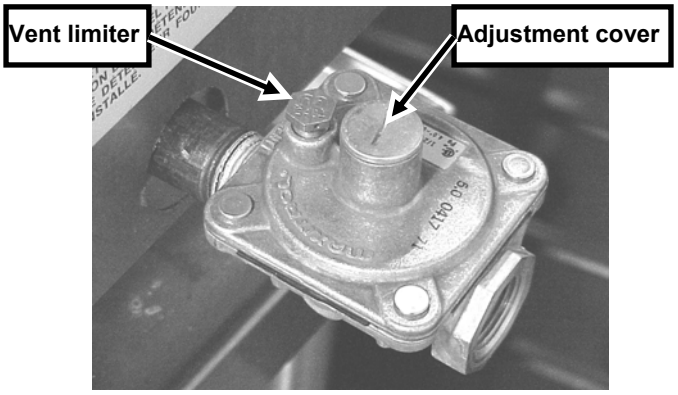

Fig. 4

The minimum supply pressure (upstream of the regulator) should be 7-9" W.C. for natural gas and 11-12" W.C. for propane gas. At no time should the charbroiler be connected to supply pressure greater than ½ psig (3.45 kPa) or 14" W.C.

GAS PRESSURE REGULATOR ADJUSTMENT

1. Remove adjustment cover. See Fig. 4.
2. Turn the adjustment screw clockwise to increase pressure and counterclockwise to decrease pressure.
3. Reinstall adjustment cover.

BURNER VALVE REPLACEMENT

⚠ WARNING Shut off the gas supply before servicing the unit.

1. Turn the main gas shut-off valve and the individual burner control knobs to the OFF position.

2. Remove inner shield assembly, knobs, shelf and front panel.

3. Disconnect all igniter wires at the igniter electrodes.

4. Remove all burner orifices. Fig 5.

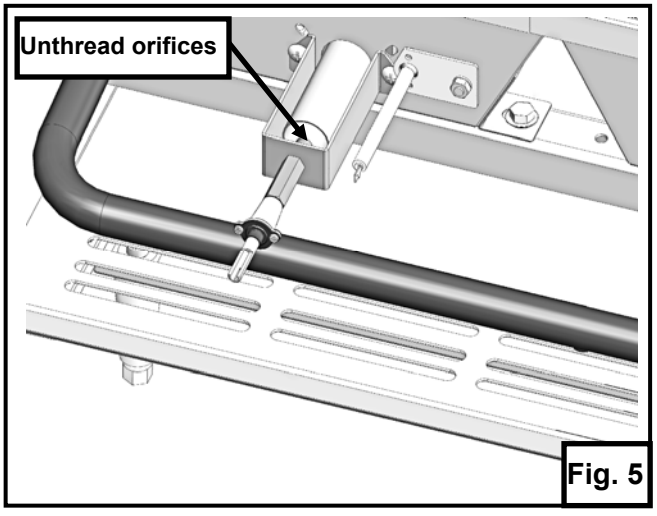

Fig. 5

5. Remove manifold retaining screw at back of unit. Fig. 6.

6. Remove manifold assembly from unit. Fig 7.

7. Measure distance between manifold pipe and valve to reference for reassembly later.

8. Unthread orifice extension and burner valve from manifold.

9. Reverse steps to reinstall burner valve. The distance between the burner valve and manifold should match previous dimensions so that the burner valve outlet is centered in the burner venturi. The gap between the orifice and the end of the burner venturi should be no more than ¼". Refer to Fig. 8 for correct burner valve and orifice positioning.

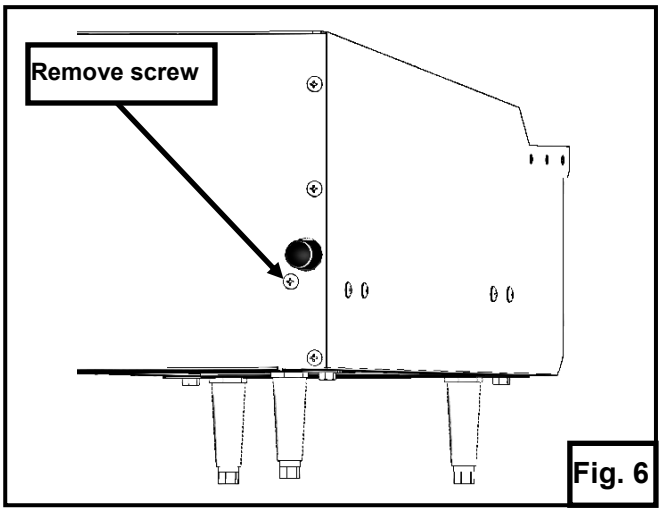

Fig. 6

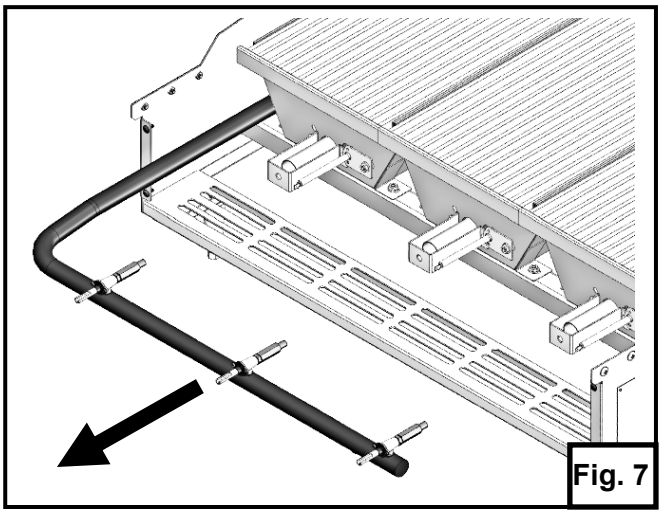
Fig. 7

NOTICE All gas supply connections and any pipe joint compound must be resistant to the action of propane gases.

⚠ WARNING Prior to lighting, check all joints in the gas supply line for leaks. Use soap and water solution. Do not use an open flame.

BURNER BOX ASSEMBLY REPLACEMENT

⚠ WARNING Shut off the gas supply before servicing the unit.

1. Turn the main gas shut-off valve and the individual burner control knobs to the OFF position.

2. Remove inner shield assembly, emitter panel, grate and shelf.

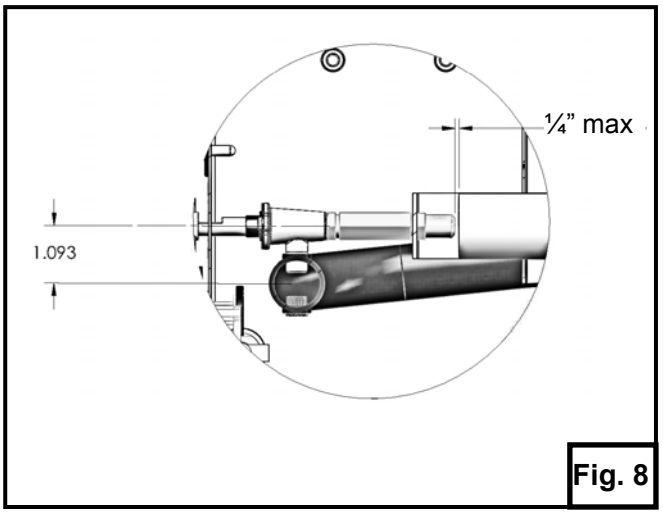

Fig. 8

3. Remove burner orifice and bolt securing the front burner bracket. Fig. 9.

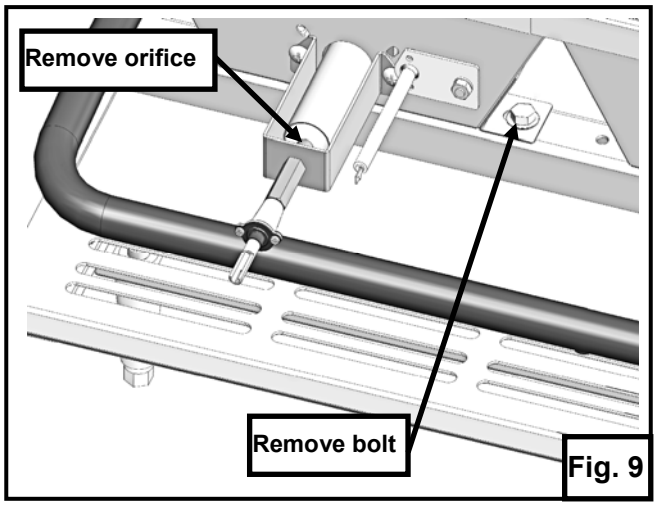

Fig. 9

4. Remove screws that are securing burner to the adjacent burner at top of the reflectors. Fig. 10.

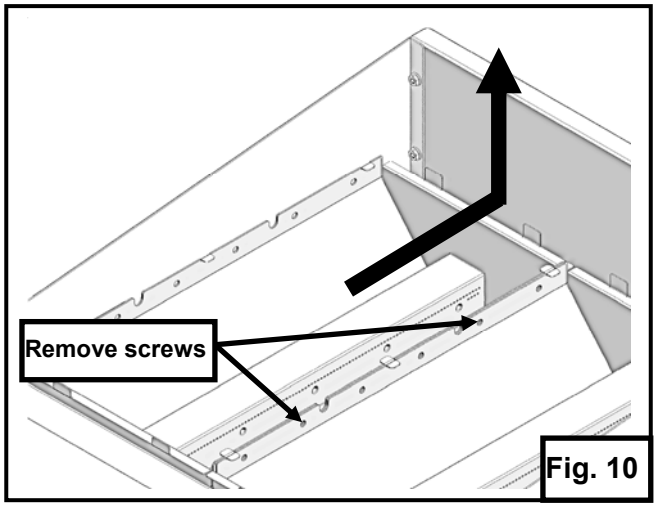

Fig. 10

5. Slide burner box assembly to the rear of unit until the bottom burner bracket clears the rear support bracket, then lift up and out. See Fig. 10 and Fig. 11.

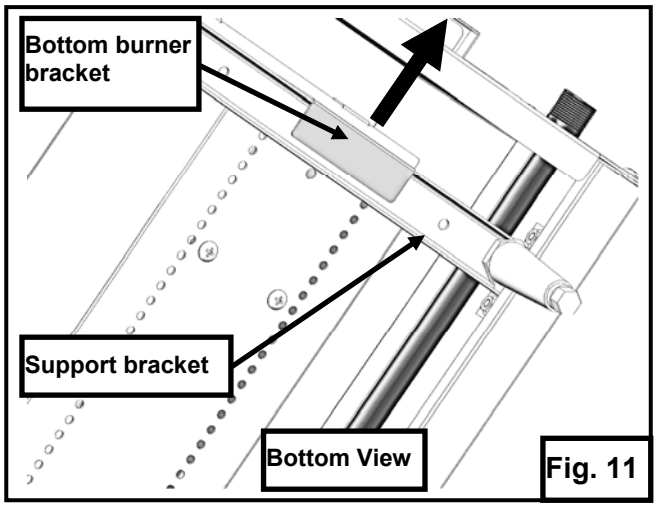

Fig. 11

6. Reverse steps to reinstall burner box assembly. Refer to Fig. 8 on page 9 for correct burner valve And orifice positioning.

⚠ WARNING The charbroiler and its parts are hot. Use care when operating, cleaning or servicing the charbroiler.

BURNER REPLACEMENT

1. Turn the main gas shut-off valve and the individual burner control knobs to the OFF position.
2. Remove inner shield assembly, emitter panel, grate and shelf.
3. Remove the four nuts that are securing the burner to the burner box assembly. Fig. 12.
4. Lift the burner slightly, then slide to the rear of the unit and lift out. Fig. 12.

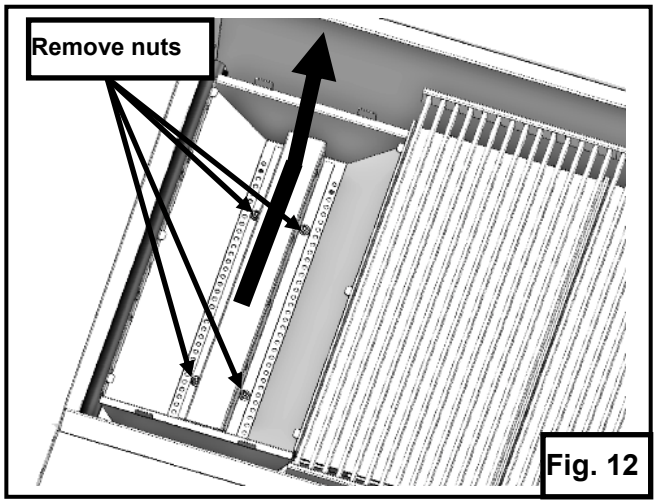

Fig. 12

IGNITER ELECTRODE REPLACEMENT

1. Turn the main gas shut-off valve and the individual burner control knobs to the OFF position.
2. Remove inner shield assembly and shelf
3. Disconnect electrode wire.
4. Remove screw and nut from electrode bracket. Fig. 13.
5. Pull electrode assembly from burner and separate bracket from electrode.
6. Reverse steps to reinstall electrode.

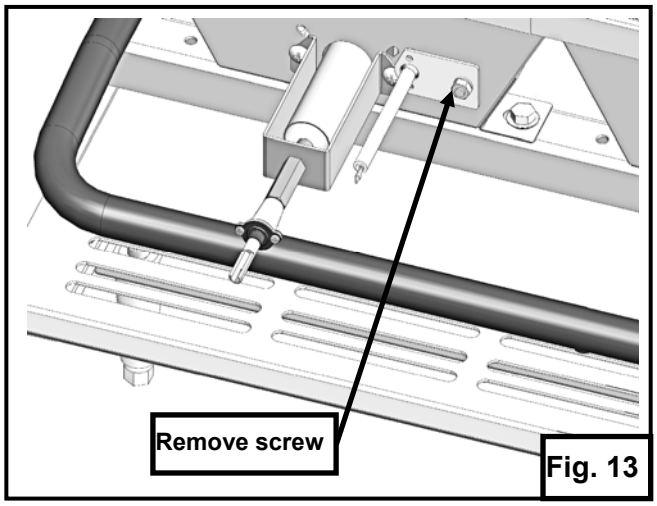

Fig. 13

ROTARY IGNITER REPLACEMENT

1. Turn the main gas shut-off valve and the individual burner control knobs to the OFF position.
2. Remove shelf and igniter knob.
3. Disconnect electrode wires and grounding wire.
4. Remove screws and nuts securing igniter to front panel. Fig. 14
5. Reverse steps to reinstall igniter. It is important to note that any igniter terminal not connected to an electrode wire, should be connected to a grounding wire.

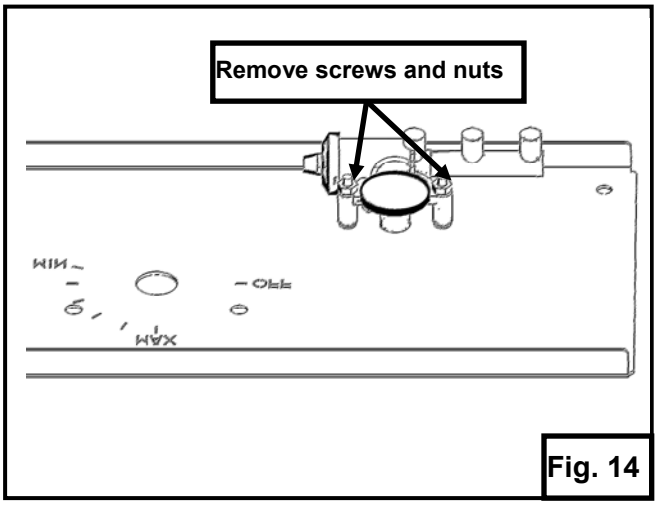

Fig. 14

TROUBLE SHOOTING

Uneven heating	A. Burner valves improperly adjusted B. Fluctuating gas pressure C. Appliance is not level D. Emitter panels are not properly seated or damaged E. Emitter panels are excessively dirty
Too much top heat	A. Faulty hood ventilation C. Overrated gas pressure D. Unit is excessively dirty E. Emitter panels are not properly seated or damaged
Uneven heat side to side	A. Burner valves improperly adjusted B. Appliance is not level side to side C. Crumb tray is not pushed all the way in D. Emitter panels are not properly seated or damaged E. Emitter panels are excessively dirty
Uneven heat front to back	A. Appliance is not level front to back B. Faulty hood ventilation C. Crumb tray is not pushed all the way in D. Emitter panels are not properly seated or damaged E. Emitter panels are excessively dirty F. Designed air flow pattern obstructed
Burner not lighting	A. Check that igniter electrode is sparking when igniter knob is turned clockwise B. Check for damaged, loose or dirty igniter wires, igniter and electrode C. Check that at igniter terminal connections are connected to an electrode wire or grounding wire. Should be no empty terminals. D. Burner valve not on MAX setting E. Gas pressure too low F. Inside burner box or burner venturi excessively dirty
Burner flames too low	A. Burner valves improperly adjusted B. Gas pressure too low C. Inside burner box or burner venturi excessively dirty D. Clogged burner orifice
Burner flames to high	A. Emitter panels are not properly seated or damaged B. Gas pressure too high
Fluctuating gas pressure	A. Checked for clogged vent on regulator
Flames in burner venturi	A. Appliance is not level B. Gas pressure not set properly C. Waiting too long before igniting burner D. Not following lighting instructions - See I&O Manual F-38330.

NOTES