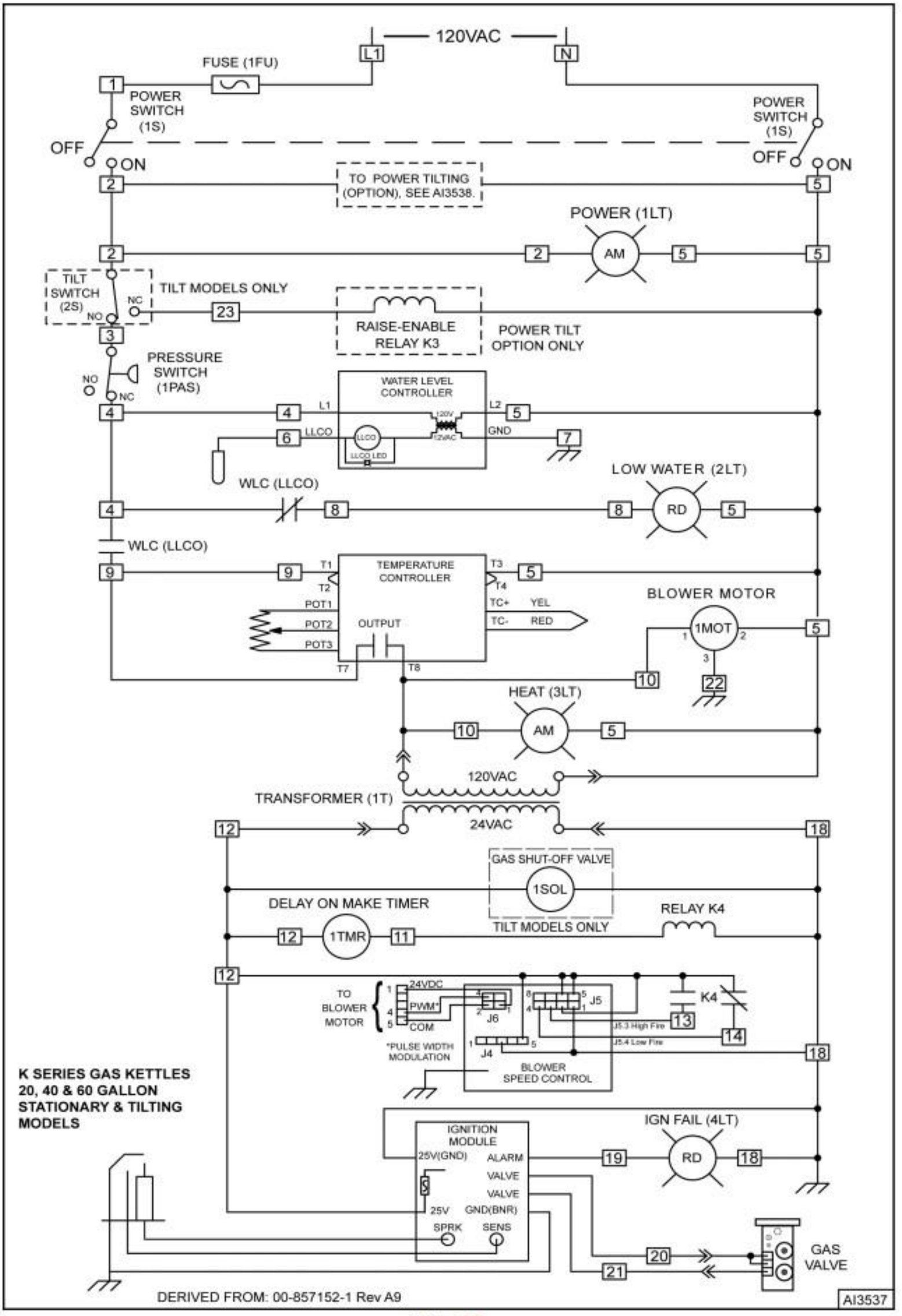
120VAC
L1
N
FUSE (1FU)
POWER SWITCH (1S)
OFF
ON
TO POWER TILTING (OPTION), SEE AI3538.
POWER (1LT)
AM
TILT SWITCH (2S)
NC
NO
TILT MODELS ONLY
RAISE-ENABLE RELAY K3
POWER TILT OPTION ONLY
PRESSURE SWITCH (1PAS)
WATER LEVEL CONTROLLER
L1
L2
LLCO
GND
LLCO LED
WLC (LLCO)
LOW WATER (2LT)
RD
TEMPERATURE CONTROLLER
T1
T2
T3
T4
POT1
POT2
POT3
OUTPUT
T7
T8
TC+
TC-
YEL
RED
BLOWER MOTOR
1MOT
HEAT (3LT)
TRANSFORMER (1T)
24VAC
GAS SHUT-OFF VALVE
1SOL
DELAY ON MAKE TIMER
1TMR
RELAY K4
TO BLOWER MOTOR
24VDC
PWM*
COM
*PULSE WIDTH MODULATION
J6
J5
J4
J5.3 High Fire
J5.4 Low Fire
K4
BLOWER SPEED CONTROL
K SERIES GAS KETTLES
20, 40 & 60 GALLON
STATIONARY & TILTING
MODELS
IGNITION MODULE
25V(GND)
ALARM
VALVE
VALVE
25V
GND(BNR)
SPRK
SENS
IGN FAIL (4LT)
RD
GAS VALVE
DERIVED FROM: 00-857152-1 Rev A9
AI3537

Fig. 70

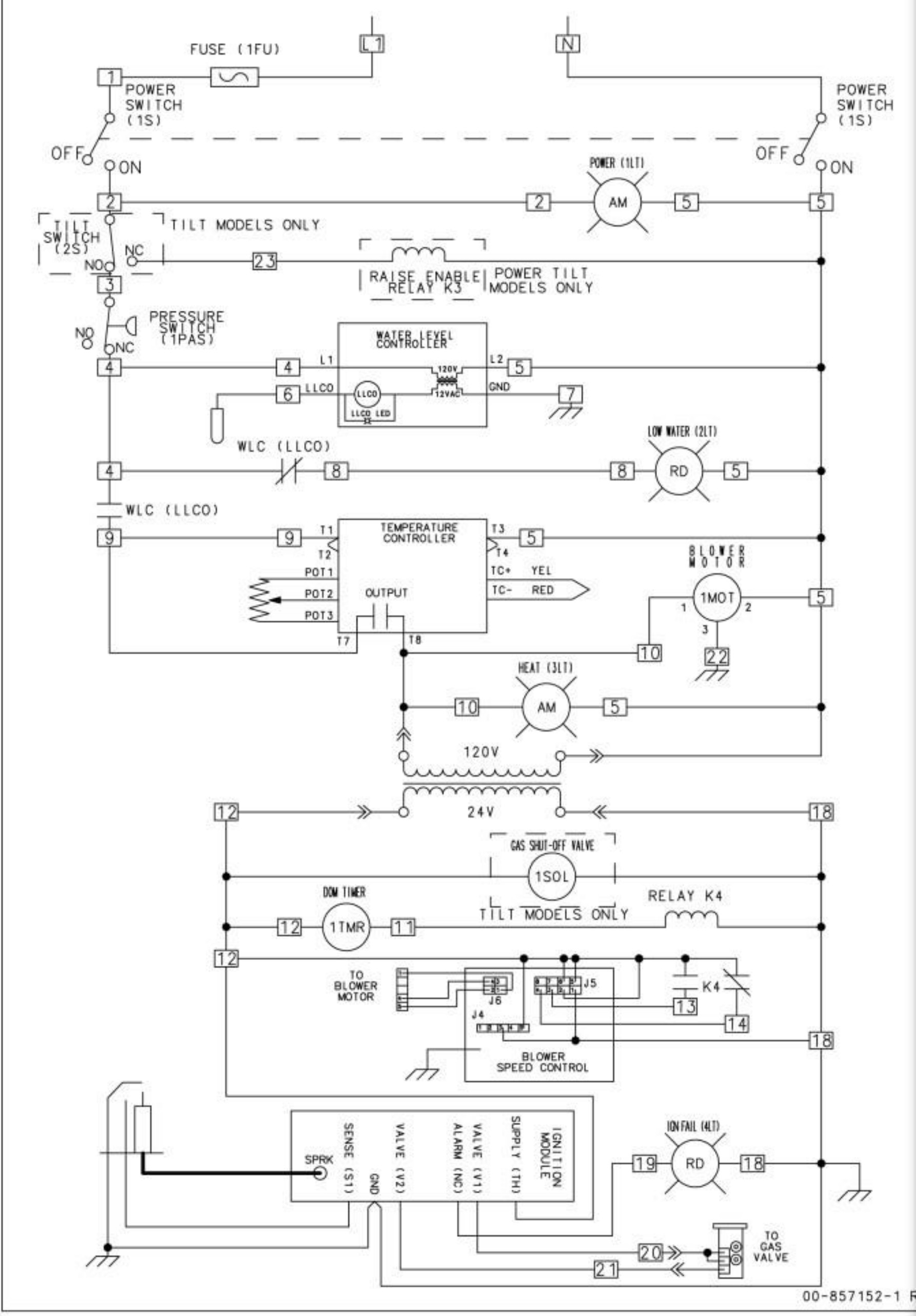
FUSE (1FU)
L1
N
POWER SWITCH (1S)
OFF
ON
POWER (1LT)
AM
TILT SWITCH (2S)
TILT MODELS ONLY
NC
NO
RAISE ENABLE RELAY K3
POWER TILT MODELS ONLY
PRESSURE SWITCH (1PAS)
WATER LEVEL CONTROLLER
L1
L2
LLCO
GND
120V
12VAC
LLCO LED
WLC (LLCO)
LOW WATER (2LT)
RD
TEMPERATURE CONTROLLER
T1
T2
T3
T4
POT1
POT2
POT3
TC+
TC-
YEL
RED
OUTPUT
T7
T8
BLOWER MOTOR
1MOT
HEAT (3LT)
120V
24V
GAS SHUT-OFF VALVE
1SOL
DOM TIMER
1TMR
RELAY K4
TO BLOWER MOTOR
J6
J5
J4
K4
BLOWER SPEED CONTROL
SPRK
SENSE (S1)
GND
VALVE (V2)
ALARM (NC)
VALVE (V1)
SUPPLY (TH)
IGNITION MODULE
IGNFAIL (4LT)
TO GAS VALVE

00-857152-1 R

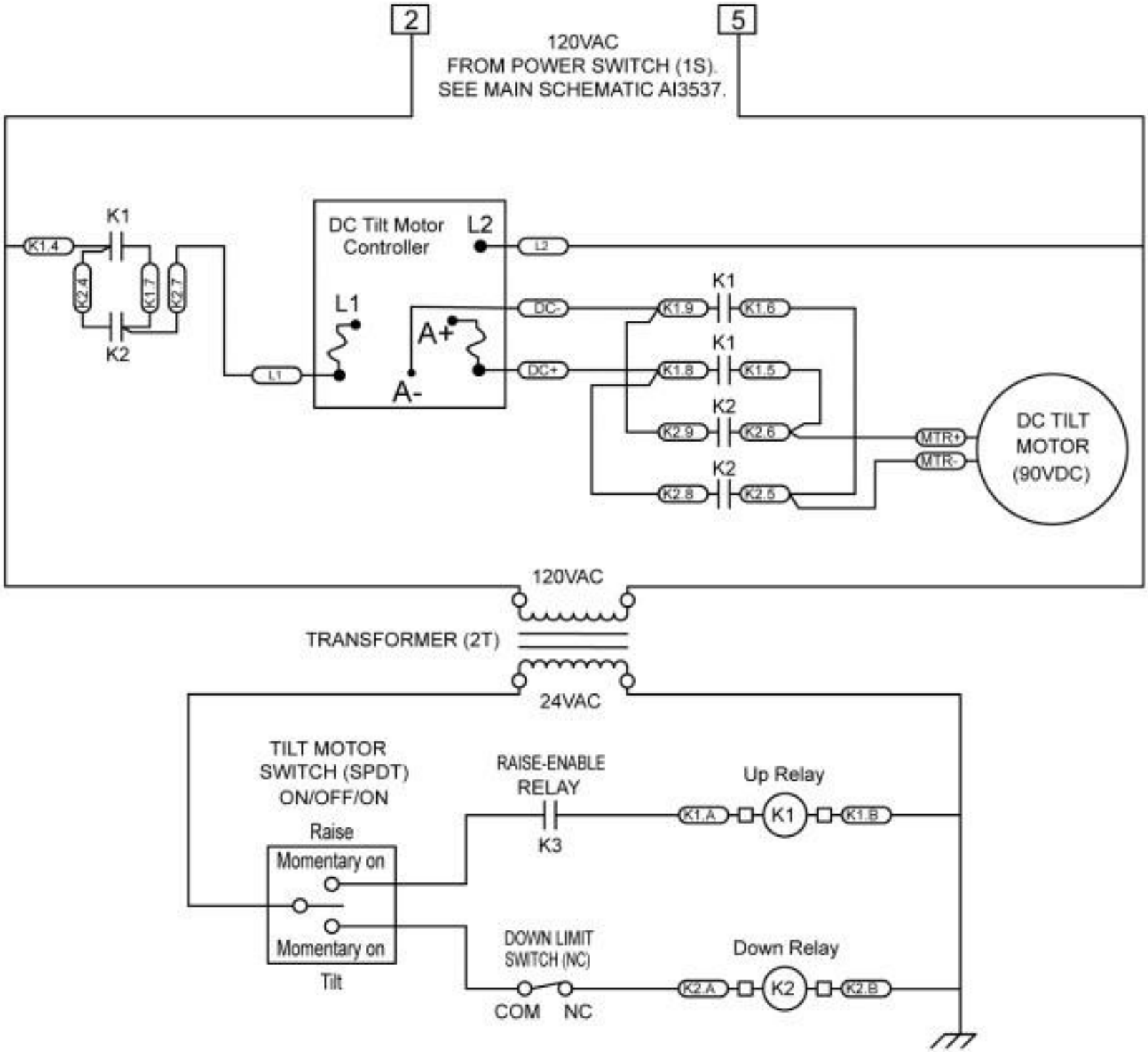

DERIVED FROM: 857970-1 (REV A)

K SERIES KETTLES - 20, 40 & 60 GALLON.
POWER TILTING OPTION ONLY

AI3538

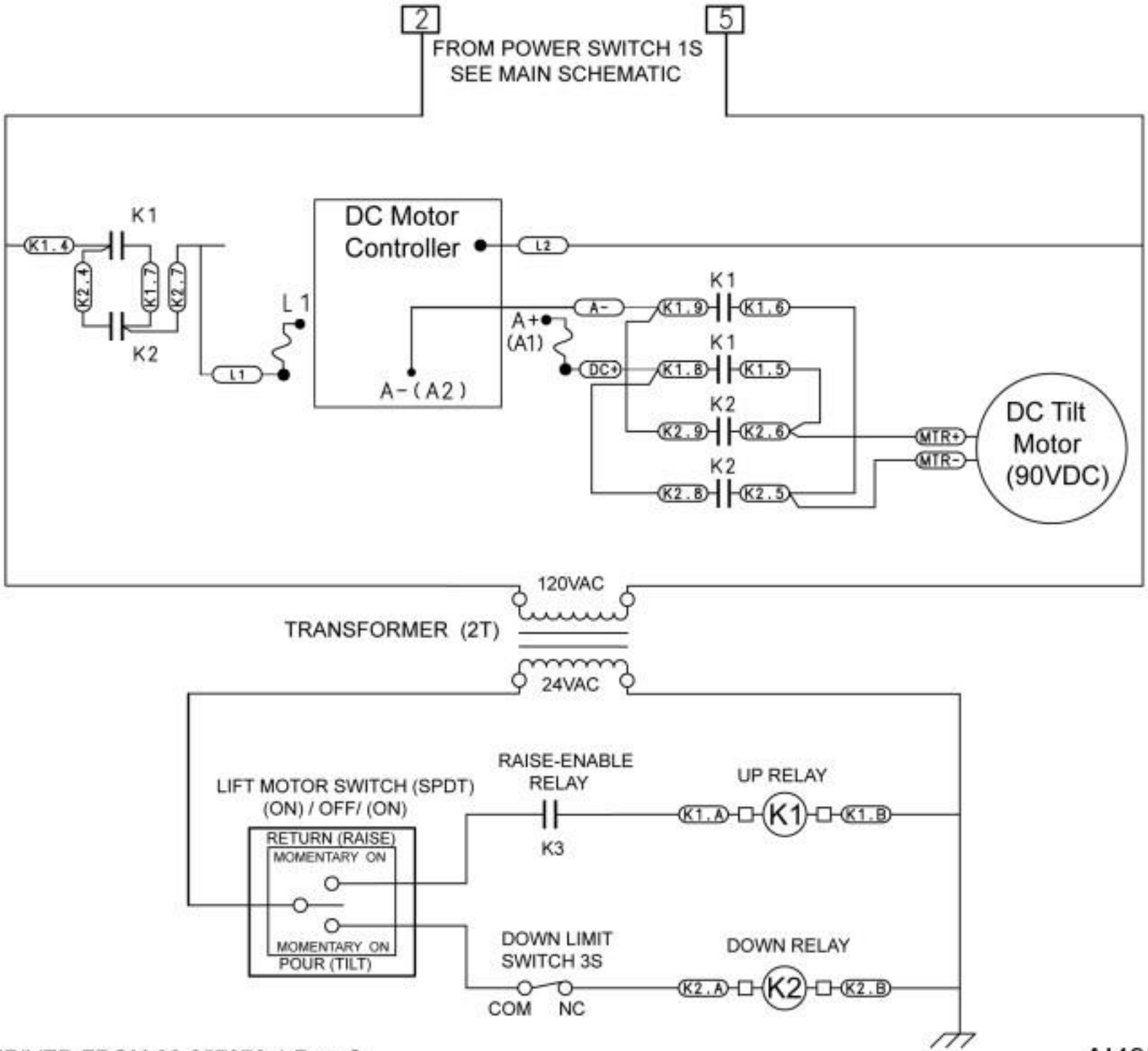

DERIVED FROM 00-857970-1 Rev. C

AI4957