CATALOG OF REPLACEMENT PARTS

GCO HALF SIZE GAS CONVECTION OVENS

ML-114569	GCO2D
ML-114571	GCO2C

 © Vulcan 2026

Table of Contents

4 CONTROL PANEL (GCO2D) (PREVIOUS CONSTRUCTION)
6 CONTROL PANEL (GCO2D) (CURRENT CONSTRUCTION)
8 COMPUTERIZED CONTROLS (GCO2C) (PREVIOUS CONSTRUCTION)
10 COMPUTERIZED CONTROLS (GCO2C) (CURRENT CONSTRUCTION)
12 COMPONENT PANEL
14 DOOR ASSEMBLY
16 CABINET (BEFORE S/N 481929307)
20 CABINET (STARTING S/N 481929307)
22 GAS BURNER AND BLOWER (BEFORE S/N 481929307)
24 GAS BURNER AND BLOWER (STARTING S/N 481929307)

(PRI

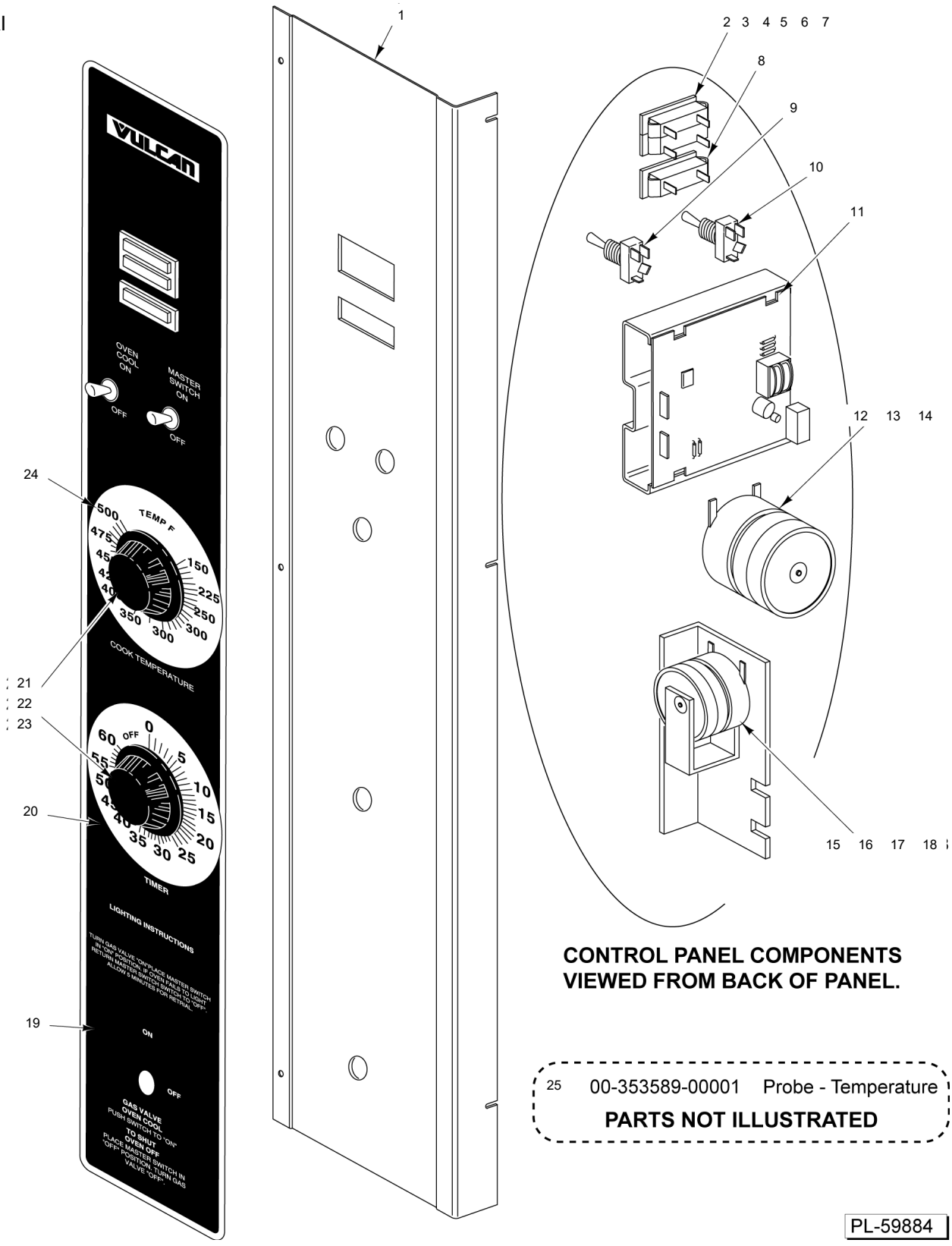

CONTROL PANEL COMPONENTS VIEWED FROM BACK OF PANEL.

25	00-353589-00001	Probe - Temperature

PARTS NOT ILLUSTRATED

PL-59884

CONTROL PANEL (GCO2D) (PREVIOUS CONSTRUCTION)

CONTROL PANEL
(GCO2D)
(PREVIOUS CONSTRUCTION)

ILLUS. PL-59884	PART NO.	NAME OF PART	AMT.
1	00-422925-000G1	Panel - Control	1
2	00-354575-00007	Light - Indicator (250 V.) (200-240 V.)	1
3	00-354575-00009	Light - Indicator (250 V.) (200-240 V.)	1
4	00-913102-00161	Light - Indicator (Double) (200-240 V.) (Incls. Items 2 & 3)	1
5	00-354575-00008	Light - Indicator (120 V.) (110-120 V.)	1
6	00-354575-00010	Light - Indicator (120 V.) (110-120 V.)	1
7	00-913102-00163	Light - Indicator (Double) (110-120 V.) (Incls. Items 5 & 6)	1
8	00-354575-00004	Light - Indicator (No Ignition)	1
9	00-340324-00006	Switch - Toggle (Power ON) (D.P.S.T.) (Previous Construction)	2
10	00-340324-00009	Switch (D.P.D.T.)	2
11	00-913149	Kit - Temperature Control (With Harness)	1
12	00-411690-00001	Timer (120 V.) (60 Hz.) (1-Hr.)	1
13	00-411690-00002	Timer (200-240 V.) (60 Hz.) (1-Hr.)	1
14	00-411690-00005	Timer (240 V.) (50 Hz.) (1-Hr.)	1
15	00-411499-00003	Buzzer (230 V.)	1
16	00-411499-00004	Buzzer (115 V.)	1
17	SD-034-49	Self-Tapping Screw 8-32 x 1/2 Slotted. Hex Washer Hd., Type T	1
18	WL-014-10	Lockwasher 1/4 External Shakeproof (SST)	1
19	00-422911-00001	Overlay - Control Panel	1
20	00-358538-00001	Plate - Dial Timer	1
21	00-411242-00001	Knob	2
22	SC-114-83	Mach. Screw 6-32 x 1/4 Slotted Pan Hd. (SST)	2
23	WS-028-20	Washer (SST)	2
24	00-358539-00001	Plate - Temperature Dial (Fahrenheit)	1
25	00-353589-00001	Probe Temperature (SST) Solid State	1

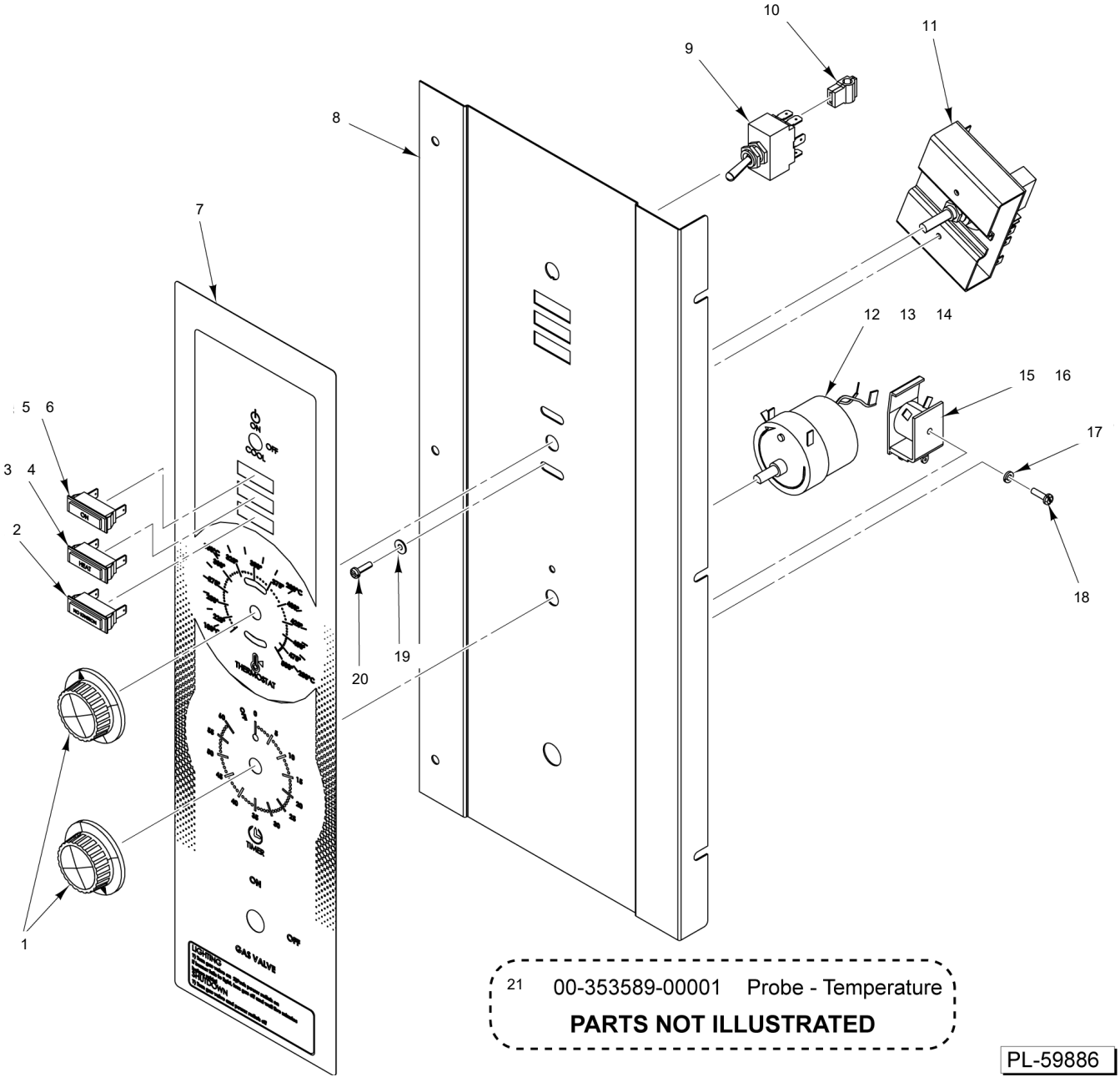

21 00-353589-00001 Probe - Temperature

PARTS NOT ILLUSTRATED

PL-59886

CONTROL PANEL
(GCO2D)
(CURRENT CONSTRUCTION)

CONTROL PANEL
(GCO2D)
(CURRENT CONSTRUCTION)

ILLUS. PL-59886	PART NO.	NAME OF PART	AMT.
1	00-411242-00001	Knob	2
2	00-354575-00004	Light - Indicator	1
3	00-354575-00009	Light - Indicator (250 V.) (240 V.)	1
4	00-354575-00010	Light - Indicator (120 V.) (120 V.)	1
5	00-354575-00007	Light - Indicator (250 V.) (240 V.)	1
6	00-354575-00008	Light - Indicator (120 V.) (120 V.)	1
7	00-428126-00001	Overlay - Control Panel	1
8	00-428129-000G1	Panel - Control Weldment	1
9	00-340324-00008	Switch (4P.D.T.)	1
10	00-412575-00007	Insulator - Terminal	1
11	00-913149	Kit - Temperature Control (With Harness)	1
12	00-411690-00001	Timer (120 V.) (60 Hz.) (1-Hr.)	1
13	00-411690-00002	Timer (200-240 V.) (60 Hz.) (1-Hr.)	1
14	00-411690-00005	Timer (240 V.) (50 Hz.) (1-Hr.)	1
15	00-411499-00003	Buzzer (230 V.)	1
16	00-411499-00004	Buzzer (115 V.)	1
17	WL-003-12	Lockwasher #8 Helical	1
18	SC-114-83	Mach. Screw 6-32 x 1/4 Slotted Pan Hd. (SST)	1
19	WS-029-61	Washer (SST)	2
20	SC-114-83	Mach. Screw 6-32 x 1/4 Slotted Pan Hd. (SST)	2
21	00-353589-00001	Probe Temperature (SST) Solid State	1

This Controller is no longer available.
Order Computerized Control Panel Assembly
11 00-959119-000G1 (120 V.)
12 00-959119-000G2 (240 V.)

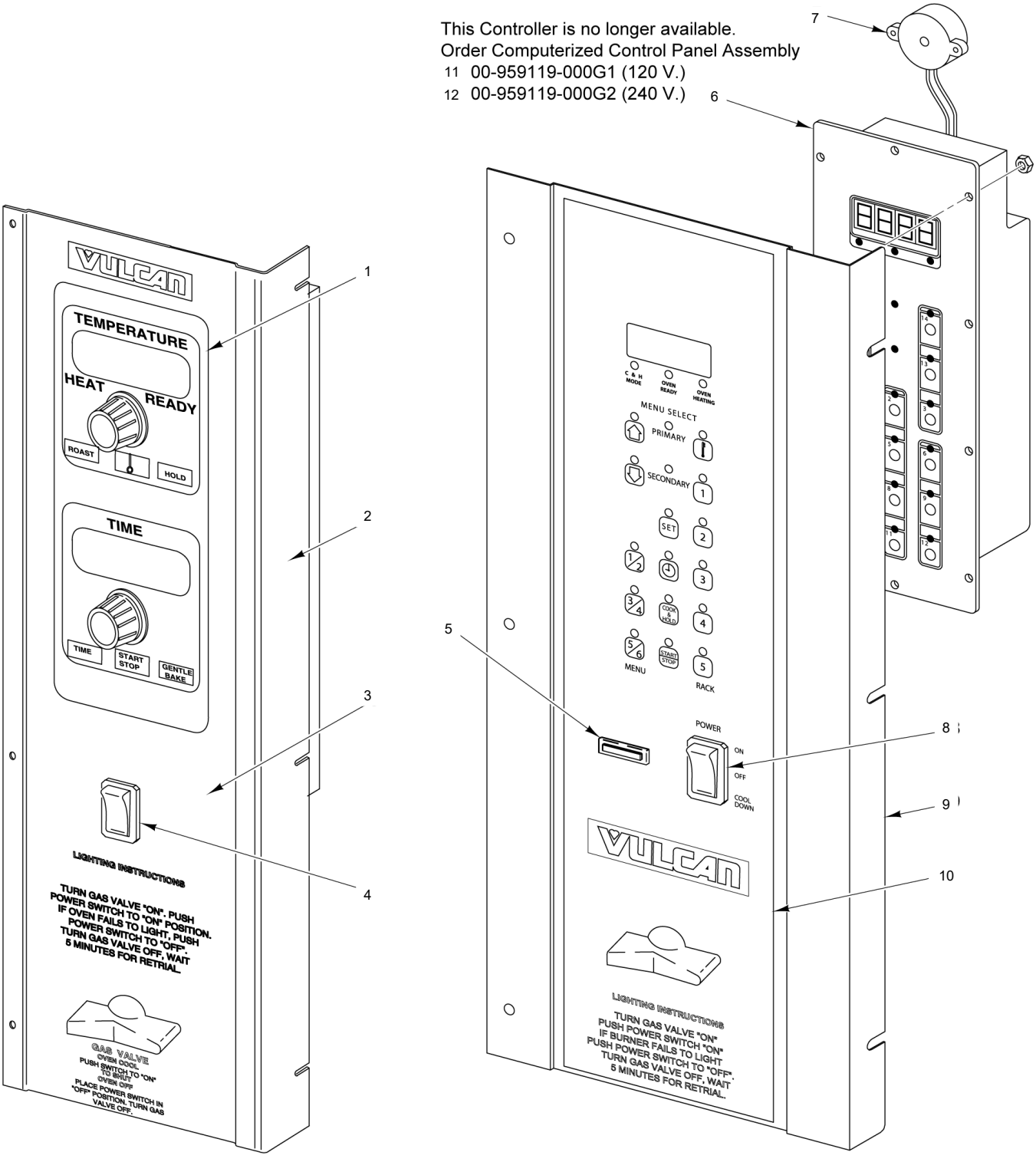

PRIOR TO 10/1999 **AFTER 10/1999** PL-59888

COMPUTERIZED CONTROLS
(GCO2C)
(PREVIOUS CONSTRUCTION)

COMPUTERIZED CONTROLS
(GCO2C)
(PREVIOUS CONSTRUCTION)

ILLUS. PL-59888	PART NO.	NAME OF PART	AMT.
1	00-355903-00004	Controller (With Roast, Hold, & Gentle Bake)	1
2	00-422923-000G1	NLA - Obsolete--Panel - Control Weldment	1
3	00-422587-00001	Overlay	1
4	00-358628-00001	Switch - Rocker (3-Position)	1
5	00-354575-00004	Light - Indicator	1
*6		Controller	1
7	00-423918-00001	Electronic Beeper	1
8	00-358628-00001	Switch - Rocker (3-Position)	1
9	00-426687-000G1	Panel - Control Weldment	1
10	00-426695-00001	Overlay	1
11	00-959119-000G1	Panel - Control Assy. (Complete) (120 V.)	AR
12	00-959119-000G2	Panel - Control Assy. (Complete) (240 V.)	AR

* (No Longer Available, Order 00-959119-000G1 or 00-959119-000G2)

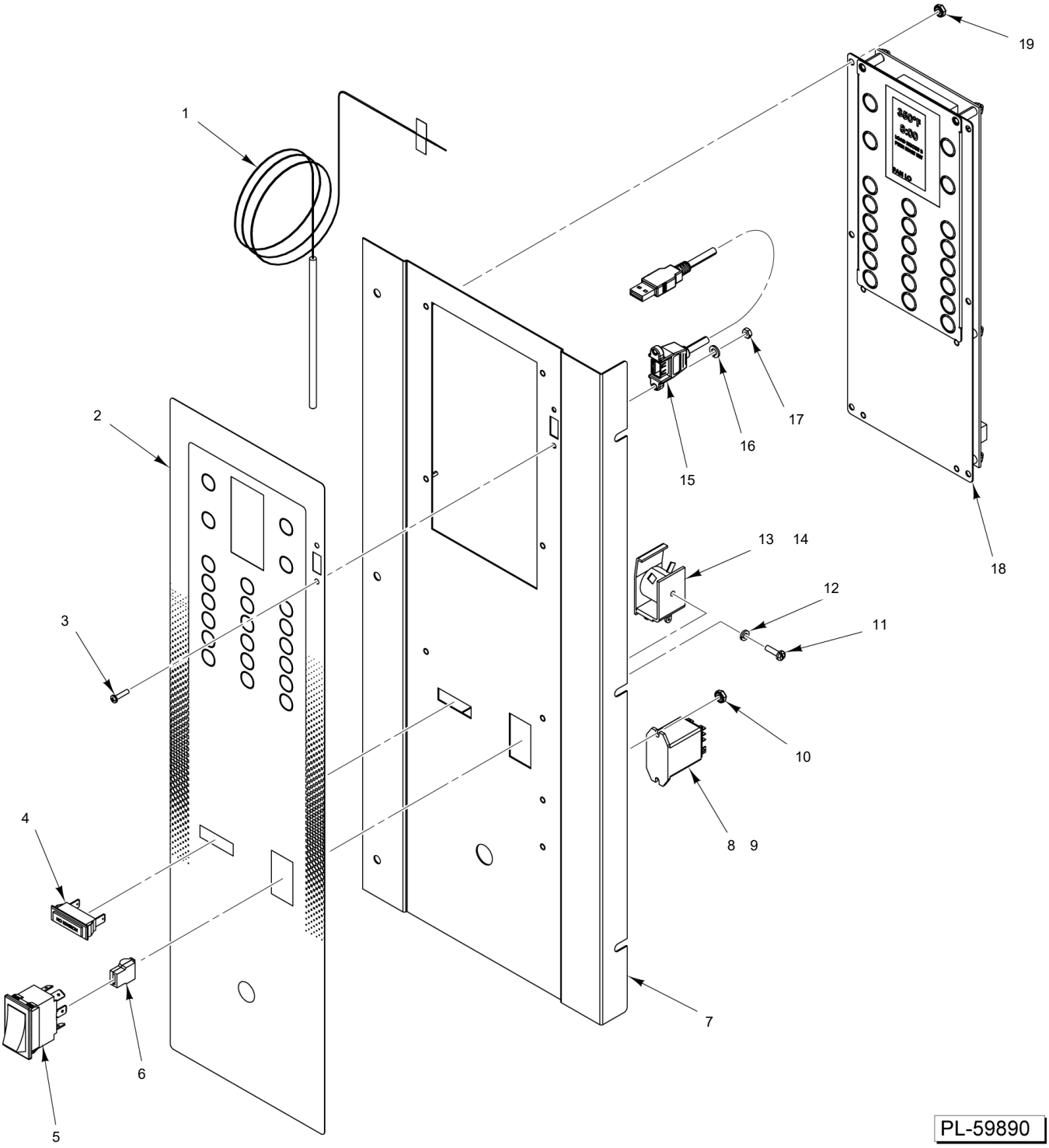

COMPUTERIZED CONTROLS
(GCO2C)
(CURRENT CONSTRUCTION)

COMPUTERIZED CONTROLS
(GCO2C)
(CURRENT CONSTRUCTION)

ILLUS. PL-59890	PART NO.	NAME OF PART	AMT.
1	00-920883-00003	Probe - Temperature For Computer Controller	1
2	00-959126-00001	Overlay (Vulcan)	1
3		Mach. Screw 4-40 x 1/2 Phil. Pan Hd	2
4	00-354575-00004	Light - Indicator	1
5	00-358628-00001	Switch - Rocker (3-Position)	1
6	00-412575-00007	Insulator - Terminal	2
7	00-959116-000G1	Panel - Control Weldment	1
8	00-416535-00006	Relay - Heating (120 V.)	1
9	00-416535-00007	Relay - Heating (200-240 V.)	1
10	NS-046-89	Nut Assy. 6-32 Hex KEPS	2
11	SC-114-83	Mach. Screw 6-32 x 1/4 Slotted Pan Hd. (SST)	1
12	WL-003-12	Lockwasher #8 Helical	1
13	00-411499-00003	Buzzer (230 V.)	1
14	00-411499-00004	Buzzer (115 V.)	1
15	00-959000-000G1	Cable Assy. (USB) (1 Ft.) (Incls. Items 3, 16, & 17)	1
16		Lockwasher	2
17		Nut 4-40 Hex	2
18	00-959077-00001	Controller - Cooking (NCC)	1
19	NS-046-89	Nut Assy. 6-32 Hex KEPS	6

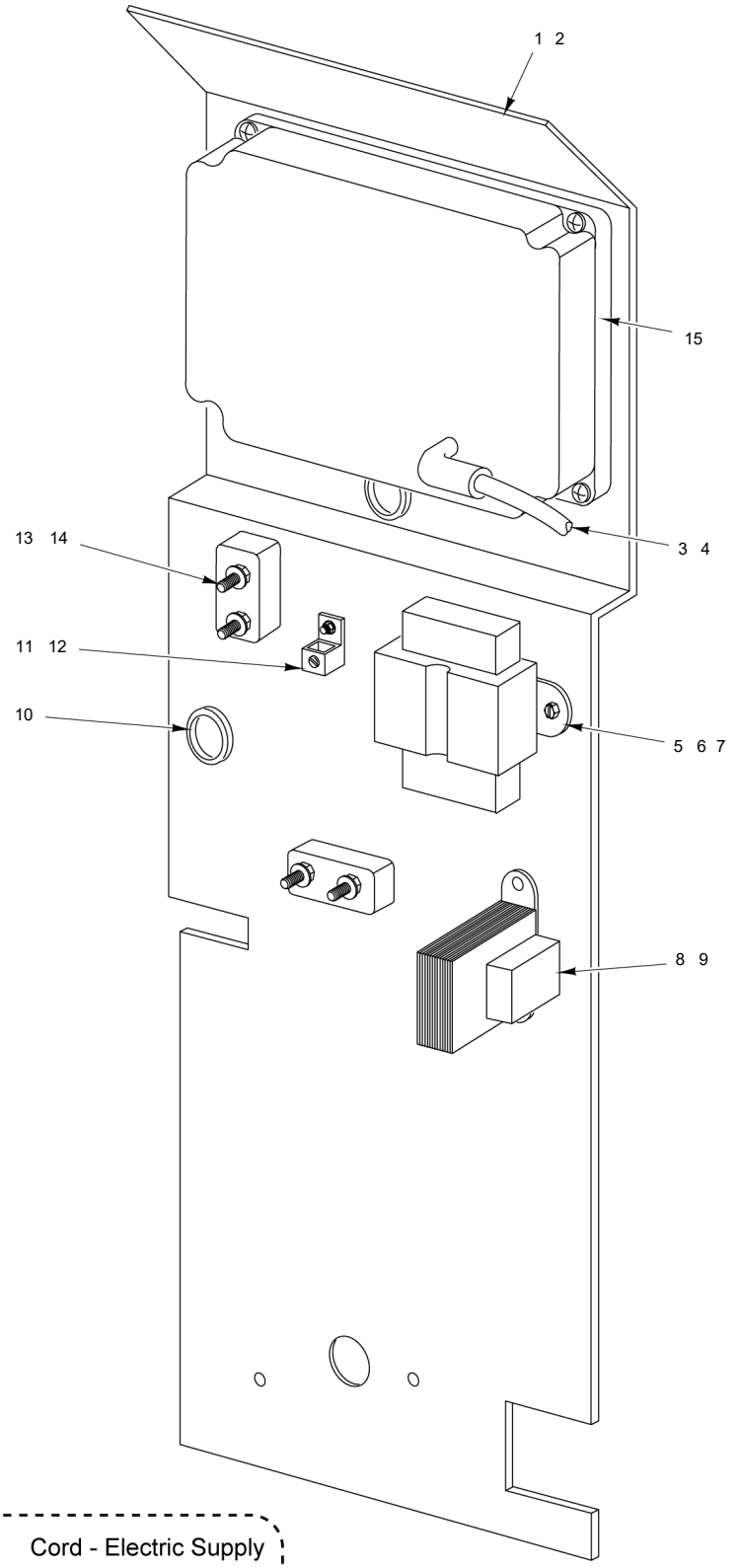

16	00-405016-00001	Cord - Electric Supply

PARTS NOT ILLUSTRATED

PL-59892

COMPONENT PANEL

COMPONENT PANEL

ILLUS. PL-59892	PART NO.	NAME OF PART	AMT.
1	00-422712-00001	Panel - Component (Before S/N 481929307)	1
2	00-961783-00001	Panel - Component (Starting S/N 481929307)	1
3	00-355087-00001	Cable - High Voltage	1
4	00-354472-00002	Harness Assy.	1
5	00-411500-00013	Transformer (200-240 VAC, 24 V., 40 VA)	1
6	00-421758-000G1	Transformer (120 V.) (24 V. Output)	1
7	SD-034-49	Self-Tapping Screw 8-32 x 1/2 Slotted. Hex Washer Hd., Type T	2
8	00-358629-00001	Transformer (6/12/120VAC) (GCO2C) (Used on Machines Built Prior to November 1999)	1
9	SD-034-49	Self-Tapping Screw 8-32 x 1/2 Slotted. Hex Washer Hd., Type T	2
10	FE-016-32	Bushing - Snap (Electrical)	2
11	00-417856-00001	Lug - Grounding (With Set Screw)	1
12	SD-034-49	Self-Tapping Screw 8-32 x 1/2 Slotted. Hex Washer Hd., Type T	1
13	00-417934-000G1	Block Assy. - Porcelain.	2
14	SD-034-49	Self-Tapping Screw 8-32 x 1/2 Slotted. Hex Washer Hd., Type T	2
15	00-354447-00001	Controller - Spark Ignitor	1
16	00-405016-00001	Cord - Electric Supply (120 V. Only)	1

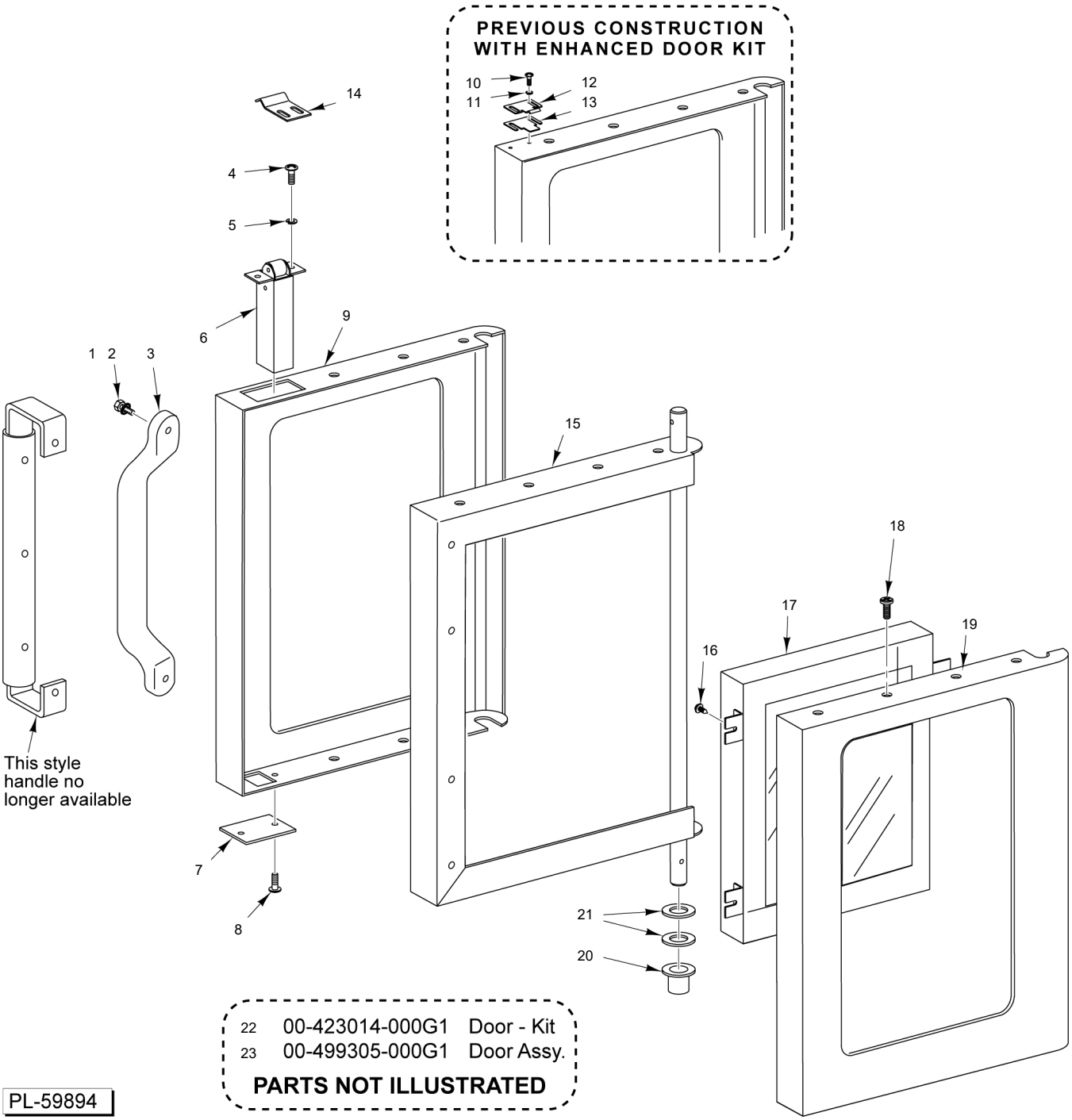

DOOR ASSEMBLY

DOOR ASSEMBLY

ILLUS. PL-59894	PART NO.	NAME OF PART	AMT.
1	00-959087-00001	Screw 1/4-20 x 1-1/4 Black Hd.	2
2	WL-013-14	Lockwasher 1/4 Internal Shakeproof (SST)	2
3	00-913102-00179	Kit - Handle (Incls. Items 1 & 2)	1
4	SC-117-73	Mach. Screw 10-32 x 5/8 Phil. Truss Hd.	2
5	WL-019-35	Lockwasher #10 Internal	2
6	00-497586-00001	Latch - Door Roller (Mounted to Door)	1
7	00-499264-00001	Plate - Latch Cutout	1
8	SD-034-22	Self-Tapping Screw 10-16 x 5/8 Phil. Truss Hd., Type AB	2
9	00-360887-00001	Panel - Outer Door (With Window)	1
10	SC-115-51	Mach. Screw 10-32 x 1/2 Phil. Truss Hd.	2
11	WL-019-35	Lockwasher #10 Internal	2
12	00-423847-00001	Strike - Door (Mounted to Door)	2
13	00-423848-00001	Shim - Door Strike	1
14	00-499270-00001	Strike - Door (Attaches to Upper "C" Channel)	1
15	00-359703-000G1	Door Frame Assy.	1
16	SD-034-62	Self-Tapping Screw 10-32 x 1/2 Slotted. Hex Washer Hd., Type T	4
17	00-358534-00001	Window Assy.	1
18	SD-034-22	Self-Tapping Screw 10-16 x 5/8 Phil. Truss Hd., Type AB	7
19	00-360889-000G1	Panel - Inner Door (With Window)	1
20	00-347080-00002	Bearing - Door Shaft	2
21	00-343143-00002	Washer	4
22	00-423014-000G1	Door Kit - Enhanced (Prior to 7/15/08) (Incls. Items 4, 5, 7, & 12)	1
23	00-499305-000G1	Door Assy.	1

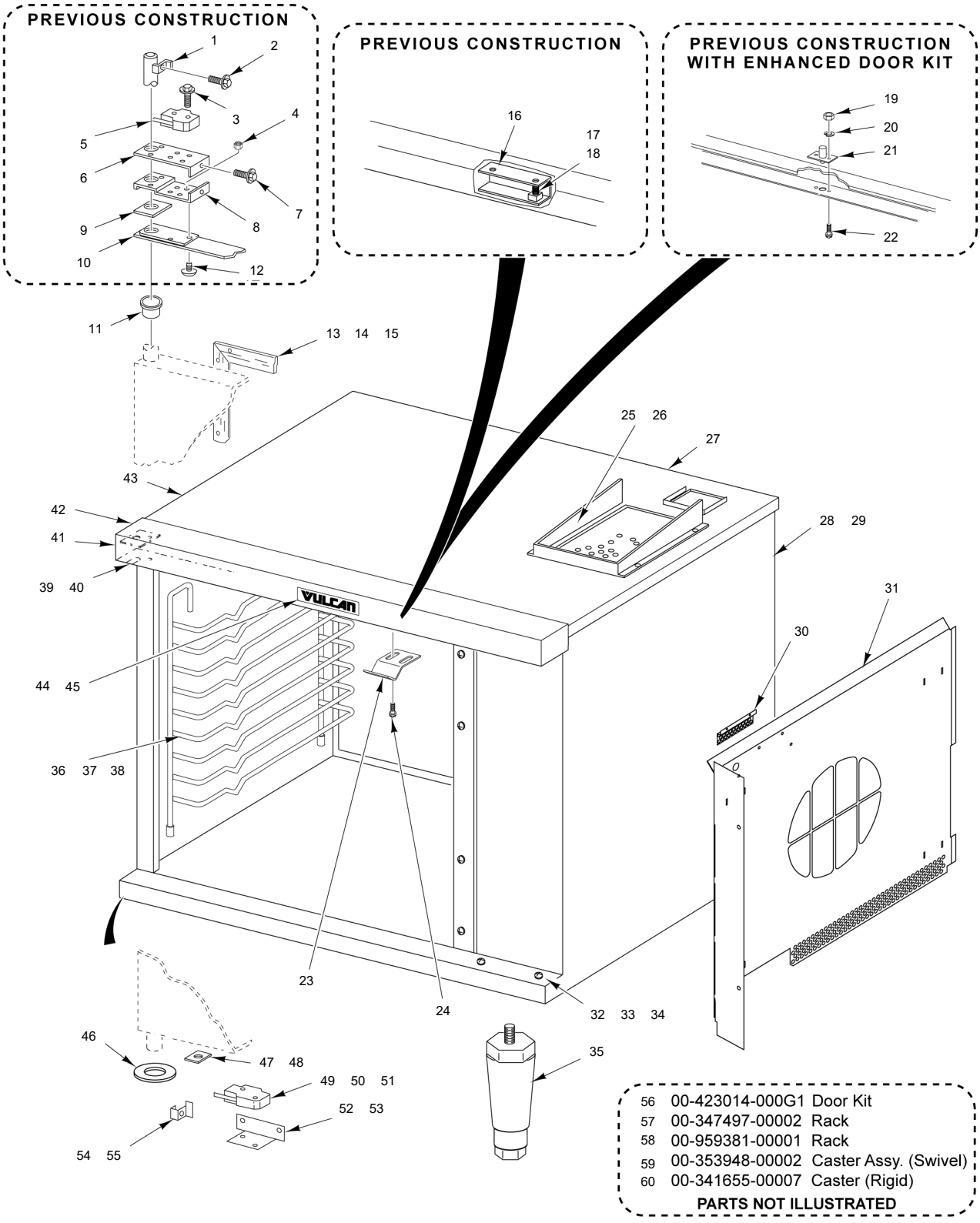

PL-59896

CABINET
(BEFORE S/N 481929307)

CABINET
(BEFORE S/N 481929307)

ILLUS. PL-19524	PART NO.	NAME OF PART	AMT.
1	00-427855-00001	Striker - Door Switch (Used on machines built prior to 12/2008)	1
2	SD-036-30	Self-Tapping Screw 8-32 x 1/4 Slotted. Hex Washer Hd., Type T	1
3	SD-034-47	Self-Tapping Screw 6-32 x 1 Slotted. Hex Washer Hd., Type T	2
4	NS-046-52	Nut Assy. 1/4-20 Hex	2
5	00-353782-00001	Switch - Door (Machines built prior to 8/2001)	1
6	00-353780-00001	Bracket - Switch (Machines built prior to 8/2001)	1
7	SD-036-30	Self-Tapping Screw 8-32 x 1/4 Slotted. Hex Washer Hd., Type T	1
8	00-353778-00001	Support - Switch	1
9	00-353482-00001	Spacer	1
10	00-353483-00001	Plate - Upper Door Bearing	1
11	00-347080-00002	Bearing - Door Shaft	1
12	SC-022-40	Mach. Screw 1/4-20 x 3/4 Phil. Flat Hd. (SST)	2
13	00-423281-00001	Seal - Door (LH or RH)	2
14	00-423280-00001	Seal - Door (Top & Bottom)	2
15	SD-034-05	Self-Tapping Screw 6-20 x 3/8 Phil. Pan Hd., Type AB	16
16	00-355344	Channel - Latch (Used on machines built prior to 12/1997)	1
17	00-417810-00003	Spring - Compression (Used on machines built prior to 12/1997)	1
18	00-411794-00001	Catch - Door (Used on machines built prior to 12/1997)	1
19	NS-046-88	Nut Assy. 10-32 Hex	2
20	WL-019-35	Lockwasher #10 Internal	2
21	00-347545-00001	Catch Assy. - Door (Roller Ball Style)	1
22	SC-115-51	Mach. Screw 10-32 x 1/2 Phil. Truss Hd.	2
23	00-499270-00001	Strike - Door	1
24	SC-115-51	Mach. Screw 10-32 x 1/2 Phil. Truss Hd.	2
25	00-354647-00001	Guard	1
26	SD-034-22	Self-Tapping Screw 10-16 x 5/8 Phil. Truss Hd., Type AB	4
27	00-354476-00002	Back (SST)	1
28	00-422715-00002	Panel - Side (RH) (SST)	1
29	00-422724-00002	Panel - Side (LH) (SST)	1
30	00-499274-00001	Cover - Probe	1
31	00-360863-00001	Baffle - Blower Inner	1
32	00-422714-00001	Cover - Lower (Used on machines built prior to 12/2008)	1
33	00-957632-00001	Cover - Lower (Used on machines built after 12/2008)	1
34	00-422592-00001	Sill - Door	1
35	00-348164-00001	Leg - Adjustable Chrome Plated (4 In.)	4
36	00-347498-00003	Guide - Rack (LH) (Used on machines built prior to 10/26/2012)	1
37	00-959382-00001	Guide - Rack (LH & RH) (Used on machines built after to 10/26/2012)	2
38	00-347498-00004	Guide - Rack (RH) (Used on machines built prior to 10/26/2012)	1
39	00-499269-00001	Support - Upper Door (Current Construction)	1
40	00-422590-00001	Support - Door Upper Reversible (Previous Construction)	1
41	00-422588-00001	Plate - Cover	1
42	00-347593-00001	Cover - Top	1
43	00-422595-00002	Top (SST)	1
44	00-957916-00003	Nameplate - Small (Vulcan)	1
45	NS-047-79	Pal Nut 3/16	2
46	00-343143-00002	Washer	1
47	00-353790-00001	Stop	1
48	SD-008-27	Self-Tapping Screw 10-16 x 1/2 Phil. Truss Hd., Type B	1
49	00-411496-000F1	Switch - Micro	1
50		Mach. Screw 6-32 x 7/8 Slotted Pan Hd	2
51	NS-046-89	Nut Assy. 6-32 Hex KEPS	2
52	00-499338-00001	Bracket - Door Switch (Used on machines built after 12/2008)	1
53	00-426854-00001	Bracket - Switch Mounting (Used on machines built prior to 12/2008)	1
54	00-499340-00001	Bracket - Shaft (Micro Switch) (Used on machines built after 12/2008)	1
55	SD-034-52	Self-Tapping Screw 8-32 x 1 Slotted. Hex Washer Hd., Type T	1
56	00-423014-000G1	Door Kit - Enhanced (Prior to 7/15/08) (Incls. Items 19 thru 22)	1
57	00-347497-00002	Rack (Used on machines built prior to 10/26/2012)	AR

CABINET
(BEFORE S/N 481929307)

ILLUS.	PART NO.	NAME OF PART	AMT.
PL-19524			
58	00-959381-00001	Rack (Used on machines built after to 10/26/2012)	AR
59	00-353948-00002	Caster (Swivel With Brake) (6 In.)	2
60	00-341655-00007	Caster (Rigid) (5 In.)	2

NOTES

32	00-423014-000G1	Door Kit - Enhanced	37	00-961703-00001	Support - Lower Door
33	00-347497-00002	Rack	38	00-961834-00001	Bracket - Door Switch
34	00-353948-00002	Caster Assy.	39	00-961711-00001	Bracket - Door Bushing
35	00-341655-00007	Caster	40	00-961709-00001	Bracket - Upper Door
36	00-342154-00002	Plug - Hole	41	00-961710-00001	Bracket - Door Catch

PARTS NOT ILLUSTRATED

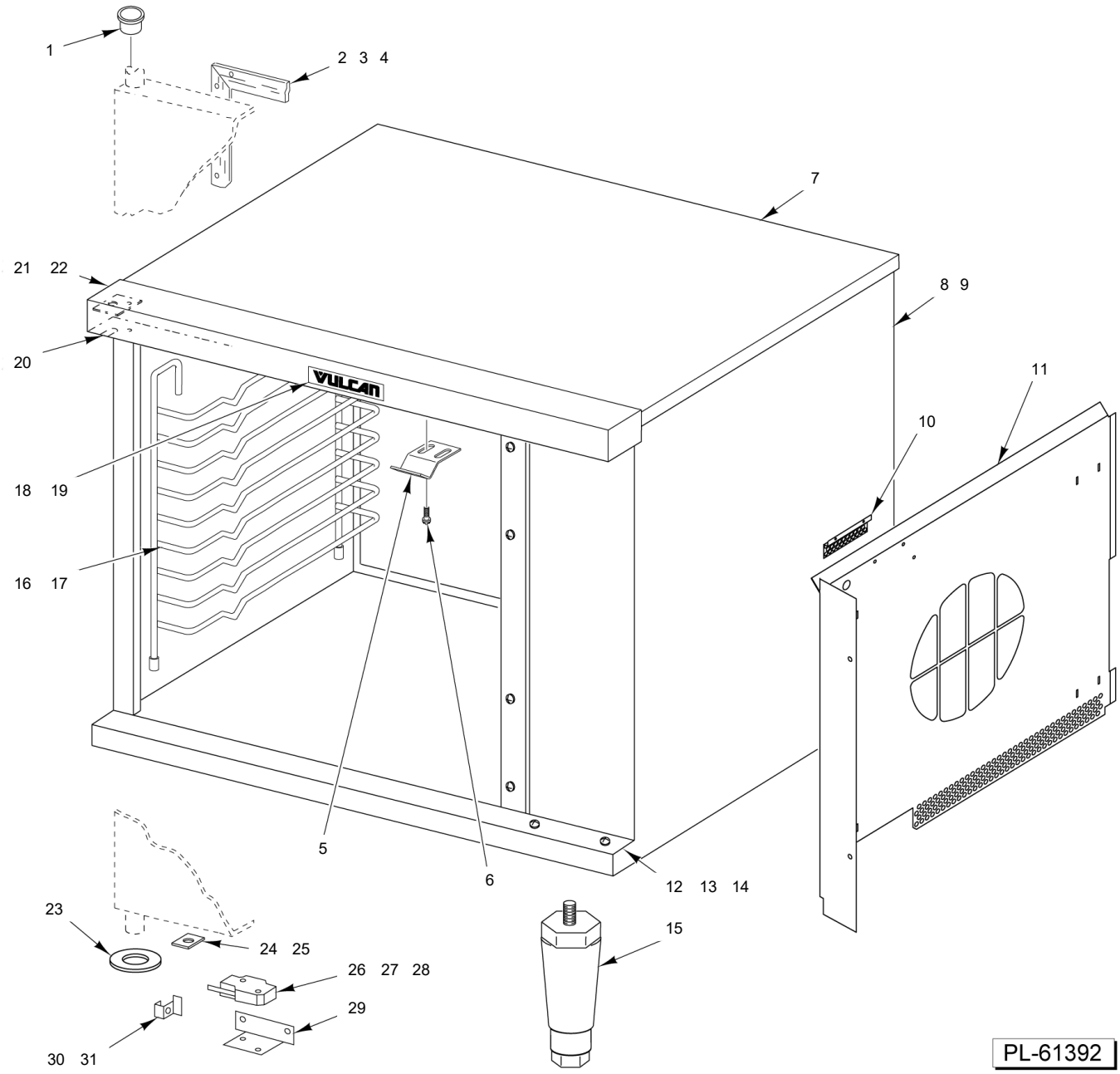

CABINET
(STARTING S/N 481929307)

CABINET
(STARTING S/N 481929307)

ILLUS. PL-61392	PART NO.	NAME OF PART	AMT.
1	00-347080-00002	Bearing - Door Shaft	1
2	00-423281-00001	Seal - Door (LH or RH)	1
3	00-423280-00001	Seal - Door (Top & Bottom)	2
4	SD-034-05	Self-Tapping Screw 6-20 x 3/8 Phil. Pan Hd., Type AB	2
5	00-497585-00001	Plate - Strike	1
6	SD-034-22	Self-Tapping Screw 10-16 x 5/8 Phil. Truss Hd., Type AB	1
7	00-354476-00002	Back (SST)	1
8	00-961747-00001	Panel - Right	1
9	00-961745-00001	Panel - Left	1
10	00-499274-00001	Cover - Probe	1
11	00-961759-00001	Cover - Fan	1
12	00-961769-00001	Trim - Bottom	2
13	00-961786-00001	Cover - Lower	2
14	00-422592-00001	Sill - Door	2
15	00-348164-00001	Leg - Adjustable Chrome Plated (4 In.)	16
16	00-347498-00003	Guide - Rack (LH)	1
17	00-347498-00004	Guide - Rack (RH)	1
18	00-957916-00003	Nameplate - Small (Vulcan)	1
19	NS-047-79	Pal Nut 3/16	2
20	00-422590-00001	Support - Door Upper Reversible	2
21	00-961781-00002	Trim - Top	1
22	00-961703-00001	Support - Lower Door	2
23	00-343143-00002	Washer	1
24	00-353790-00001	Stop	2
25	SD-008-27	Self-Tapping Screw 10-16 x 1/2 Phil. Truss Hd., Type B	1
26	00-411496-000F1	Switch - Micro	4
27	SC-123-87	Mach. Screw 6-32 x 7/8 Slotted Pan Hd.	1
28	NS-046-89	Nut Assy. 6-32 Hex KEPS	1
29	00-499338-00001	Bracket - Door Switch	1
30	00-499340-00001	Bracket - Shaft (Micro Switch)	1
31	SD-034-52	Self-Tapping Screw 8-32 x 1 Slotted. Hex Washer Hd., Type T	1
32	00-423014-000G1	Door Kit - Enhanced	1
33	00-347497-00002	Rack	1
34	00-353948-00002	Caster (Swivel With Brake) (6 In.)	1
35	00-341655-00007	Caster (Rigid) (5 In.)	4
36	00-342154-00002	Plug - Hole	1
37	00-961703-00001	Support - Lower Door	1
38	00-961834-00001	Bracket - Door Switch	1
39	00-961711-00001	Bracket - Door Bushing	1
40	00-961709-00001	Bracket - Upper Door	1
41	00-961710-00001	Bracket - Door Catch	1

46	00-348072-00009	Orifice - Hood
47	00-348072-00015	Orifice - Hood

PARTS NOT ILLUSTRATED

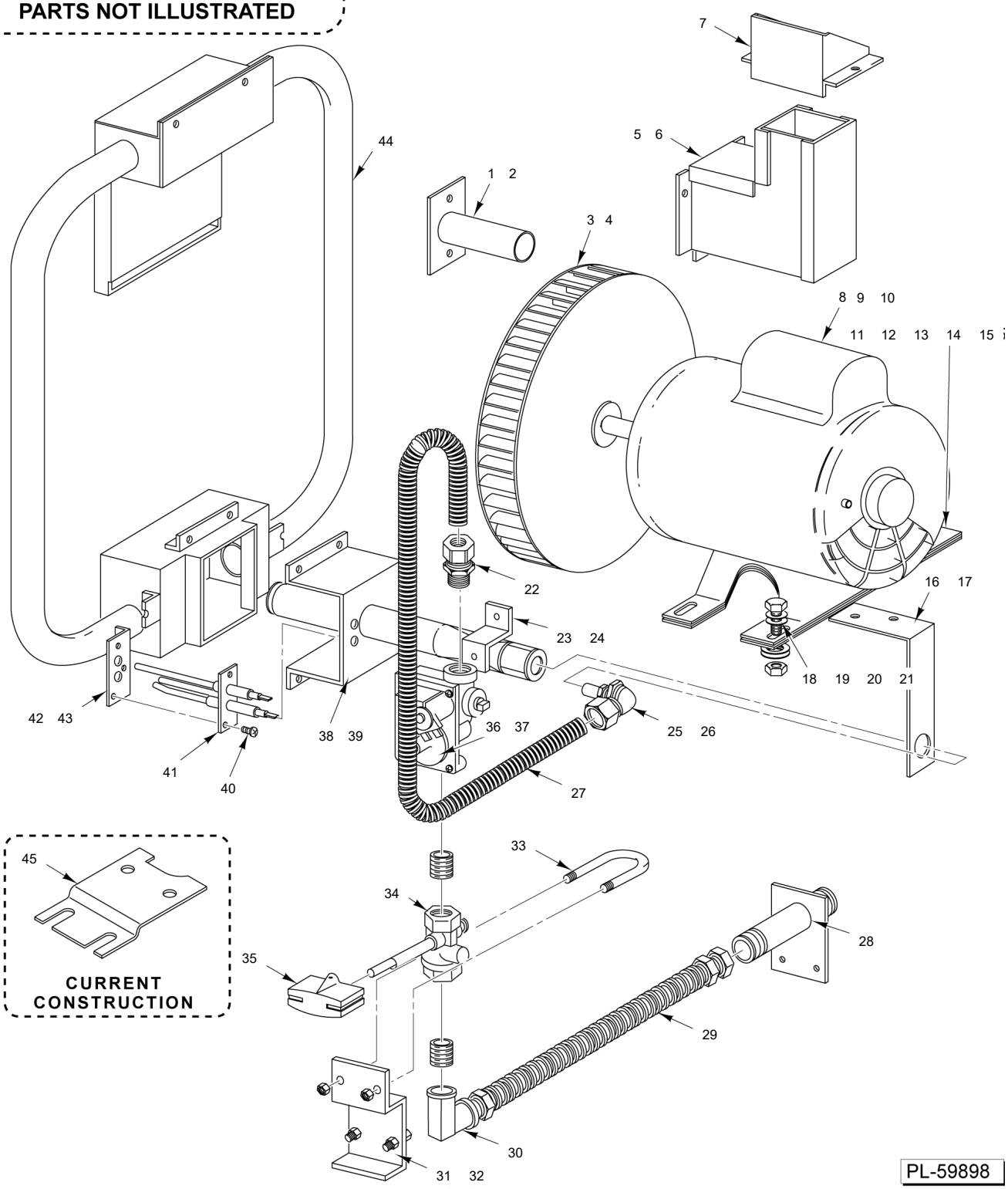

GAS BURNER AND BLOWER
(BEFORE S/N 481929307)

GAS BURNER AND BLOWER
(BEFORE S/N 481929307)

ILLUS. PL-59898	PART NO.	NAME OF PART	AMT.
1	00-354431-00001	Flue Assy.	1
2	SD-034-21	Self-Tapping Screw 10-16 x 1/2 Slotted. Hex Washer Hd., Type AB	2
3	00-354262-00001	Blower	1
4	SC-114-03	Mach. Screw 10-32 x 1/2 Hex Washer Hd	2
5	00-354446-00001	Deflector Assy.	1
6	SD-034-21	Self-Tapping Screw 10-16 x 1/2 Slotted. Hex Washer Hd., Type AB	2
7	00-354482-00001	Vent Extension	1
8	FE-023-56	Bushing - Electric Snap	1
9	00-358516-00001	Motor 1/2 Hp. (2-Speed) (115 V., 50/60 Hz., 1 Ph.)	1
10	00-358516-00002	Motor 1/2 Hp. (2-Speed) (208-240 V., 50/60 Hz., 1 Ph.)	1
11	00-347786-00002	Motor Mount Assy.	1
12	SC-116-84	Cap Screw 5/16-18 x 1-1/8 Hex Hd	4
13	WS-029-46	Washer	4
14	NS-046-86	Nut Assy. 5/16-18 KEPS Hex	4
15	00-358723-00001	Spacer - Steel	1
16	00-354485-00001	Support - Gas Inlet	1
17	SD-034-62	Self-Tapping Screw 10-32 x 1/2 Slotted. Hex Washer Hd., Type T	2
18	SC-116-84	Cap Screw 5/16-18 x 1-1/8 Hex Hd	4
19	WS-029-46	Washer	4
20	WS-029-46	Washer	4
21	NS-046-86	Nut Assy. 5/16-18 KEPS Hex	4
22	FP-085-68	Fitting- Elbow (7/16 TBG X 3/8 MPT) (Brass)	1
23	00-422982-00001	Support - Gas Valve (Previous Construction)	1
24	SD-034-52	Self-Tapping Screw 8-32 x 1 Slotted. Hex Washer Hd., Type T	2
25	00-348031-00009	Orifice 90 Deg. Compression (#42 Drill)	1
26	00-348031-00005	Orifice 90 Deg. Compression (#54 Drill)	1
27	00-426508-00016	Tube - Flex 7/16 O.D. (16 In. Lg.)	1
28	00-354513-00001	Pipe & Support Assy.	1
29	00-423828-00004	Tube - Flex (18 In. Lg.)	1
30	FP-087-19	Elbow - Reducing 1/2 x 3/8 x 90 Deg. (Brass)	1
31	00-356735-00001	Support - Valve	1
32	NS-046-52	Nut Assy. 1/4-20 Hex	2
33	00-521820	U-Bolt	1
34	00-407789-00001	Valve - Service	1
35	00-402957-00003	Handle - Gas (Black)	1
36	00-354344-00004	Valve - Gas Control (NAT)	1
37	00-354344-00005	Valve - Gas Control (LP)	1
38	00-354519-00001	Burner Assy.	1
39	00-422918-00001	Gasket	1
40	SD-034-05	Self-Tapping Screw 6-20 x 3/8 Phil. Pan Hd., Type AB	2
41	00-354444-00001	Ignition Electrode Assy.	1
42	00-354496-00001	Support - Lighter	1
43	SD-034-05	Self-Tapping Screw 6-20 x 3/8 Phil. Pan Hd., Type AB	2
44	00-422783-000G1	Heat Exchanger Assy.	1
45	00-356735	Support - Valve	1
46	00-348072-00009	Orifice - Hood (#42 Drill) (NAT)	1
47	00-348072-00015	Orifice - Hood (#54 Drill) (LP)	1

27	00-348072-00009	Orifice - Hood (#42 Drill)
28	00-348072-00015	Orifice - Hood (#54 Drill)

PARTS NOT ILLUSTRATED

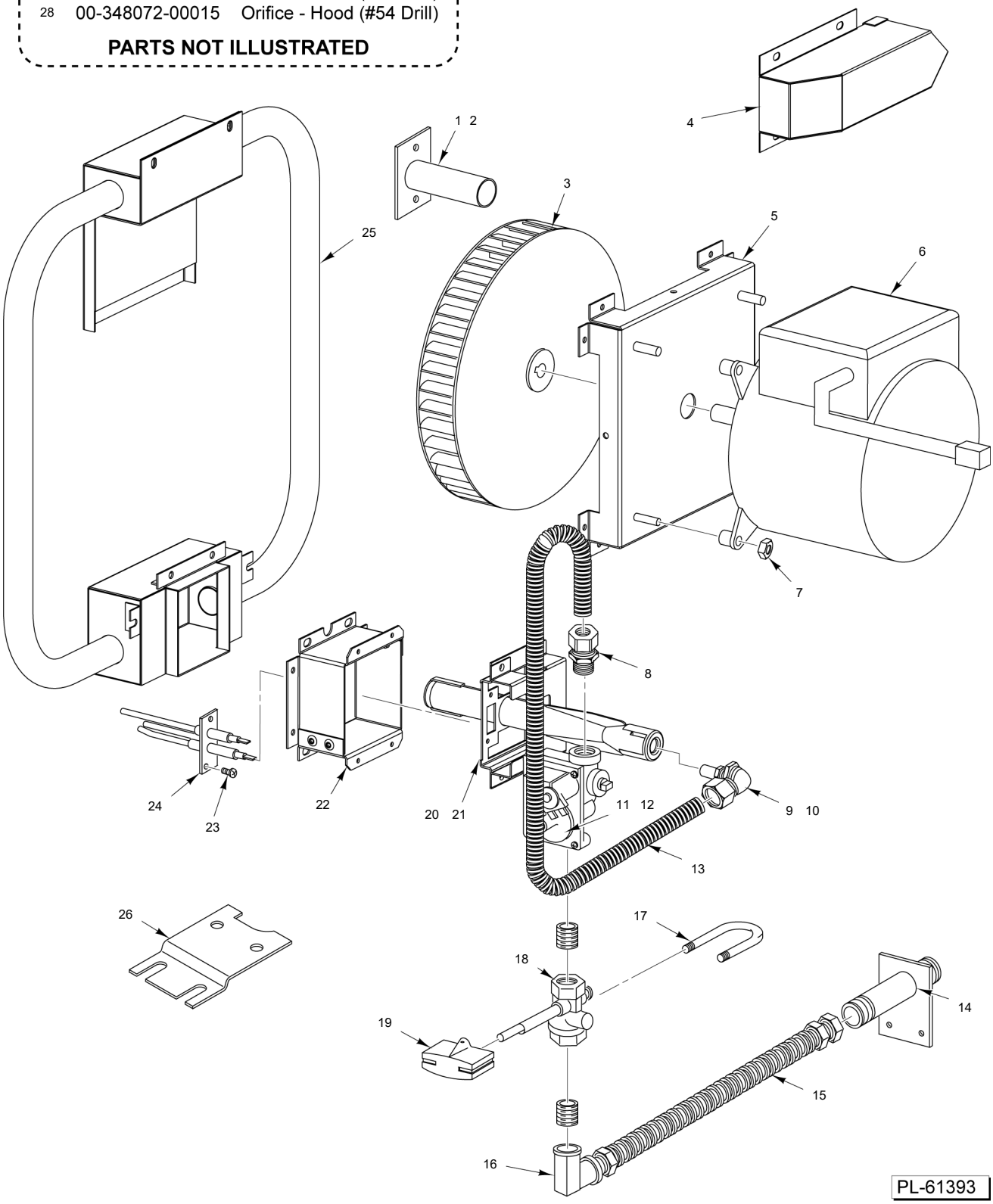

GAS BURNER AND BLOWER
(STARTING S/N 481929307)

GAS BURNER AND BLOWER
(STARTING S/N 481929307)

ILLUS. PL-61393	PART NO.	NAME OF PART	AMT.
1	00-354431-00001	Flue Assy.	1
2	SD-034-21	Self-Tapping Screw 10-16 x 1/2 Slotted. Hex Washer Hd., Type AB	2
3	00-354262-00001	Blower	1
4	00-960120-000G1	Deflector Assy.	1
5	00-961688	Support - Motor Mount	1
6	00-961739-000G1	Motor, 120 VAC, 0.5 HP	1
7	NS-046-86	Nut Assy. 5/16-18 KEPS Hex	4
8	FP-085-68	Fitting- Elbow (7/16 TBG X 3/8 MPT)	1
9	00-348031-00009	Orifice 90 Deg. Compression (#42 Drill)	1
10	00-348031-00005	Orifice 90 Deg. Compression (#54 Drill)	1
11	00-354344-00004	Valve - Gas Control (NAT)	1
12	00-354344-00005	Valve - Gas Control (LP)	1
13	00-426508-00016	Tube - Flex 7/16 O.D. (16 In. Lg.)	1
14	00-354513-00001	Pipe & Support Assy.	1
15	00-423828-00004	Tube - Flex (18 In. Lg.)	1
16	FP-087-19	Elbow - Reducing 1/2 x 3/8 x 90 Deg. (Brass)	1
17	00-521820	U-Bolt	1
18	00-407789-00001	Valve - Service	1
19	00-402957-00003	Handle - Gas (Black)	1
20	00-961787-000G1	Burner Assy.	1
21	00-961543-00001	Cover - Burner	1
22	00-960188	Support - Heat Exchanger	1
23	SD-034-05	Self-Tapping Screw 6-20 x 3/8 Phil. Pan Hd., Type AB	2
24	00-354444-00001	Ignition Electrode Assy.	1
25	00-422783-000G1	Heat Exchanger Assy.	1
26	00-356735	Support - Valve	1
27	00-348072-00009	Orifice - Hood (#42 Drill) (NAT)	1
28	00-348072-00015	Orifice - Hood (#54 Drill) (LP)	1