CATALOG OF REPLACEMENT PARTS



ECO HALF SIZE ELECTRIC CONVECTION OVENS

ML-114570	ECO2D
ML-114572	ECO2C

 © Vulcan 2026

Table of Contents

4 CONTROL PANEL (ECO2D) (PREVIOUS CONSTRUCTION)
6 CONTROL PANEL (ECO2D) (BEFORE S/N 482055841)
8 CONTROL PANEL (ECO2D) (STARTING S/N 482055841)
10 COMPUTERIZED CONTROLS (ECO2C) (PREVIOUS CONSTRUCTION)
12 COMPUTERIZED CONTROLS (ECO2C) (CURRENT CONSTRUCTION)
14 COMPONENT PANEL
16 DOOR ASSEMBLY
18 CABINET (BEFORE S/N 481929290)
22 CABINET (STARTING S/N 481929290)
24 ELECTRIC HEATERS AND BLOWER

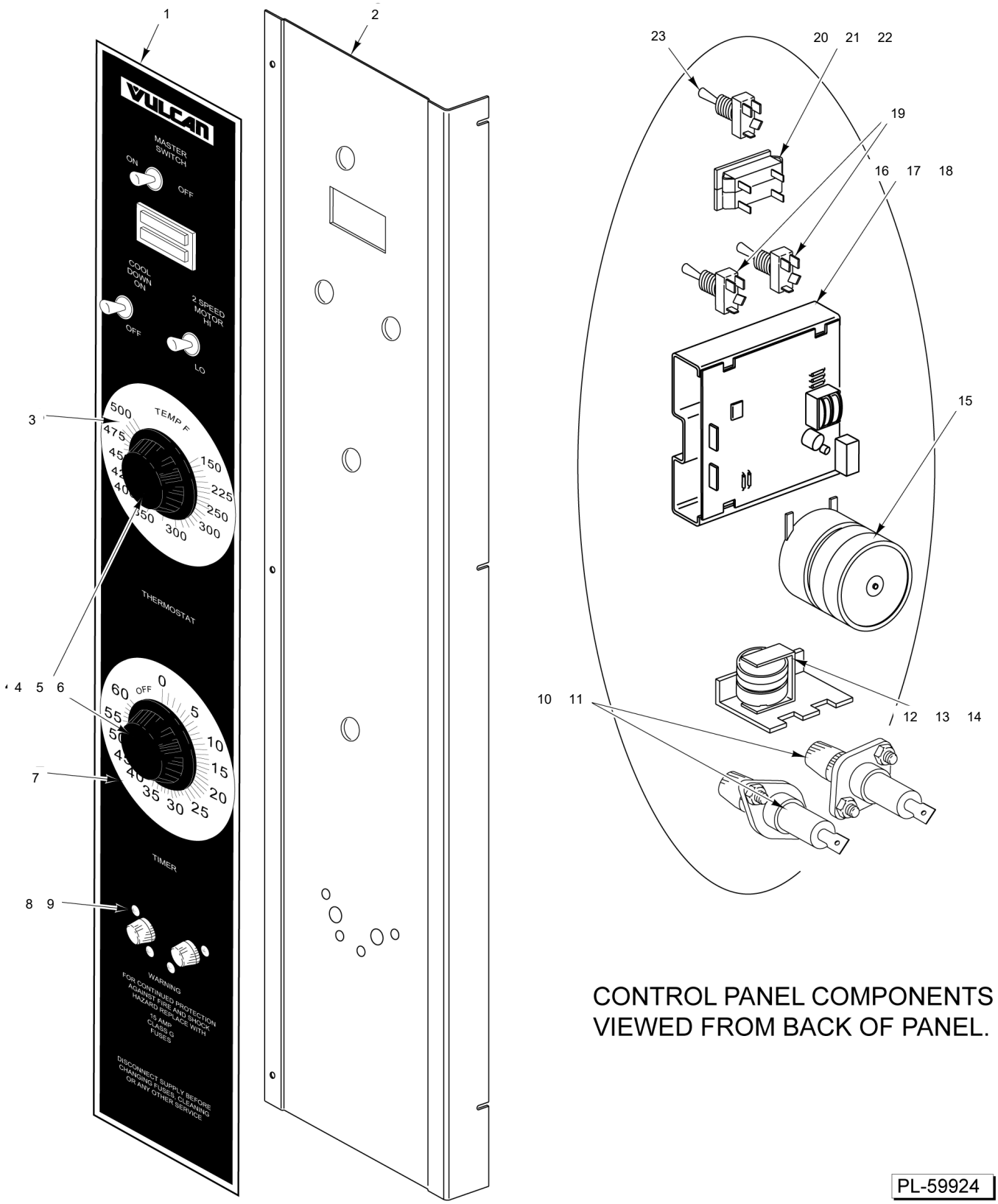

PL-59924

CONTROL PANEL
(ECO2D)
(PREVIOUS CONSTRUCTION)

CONTROL PANEL
(ECO2D)
(PREVIOUS CONSTRUCTION)

ILLUS. PL-59924	PART NO.	NAME OF PART	AMT.
1	00-360881-00001	Overlay - Control Panel	1
2	00-422926-000G1	Panel - Control Weldment	1
3	00-358539-00001	Plate - Temperature Dial (Fahrenheit)	1
4	00-411242-00001	Knob	2
5	SC-114-83	Mach. Screw 6-32 x 1/4 Slotted Pan Hd. (SST)	2
6	WS-028-20	Washer (SST)	2
7	00-358538-00001	Plate - Dial Timer	1
8	SC-114-27	Mach. Screw 8-32 x 1/2 Phil. Pan Hd.	4
9	NS-046-51	Nut Assy. 8-32 Hex	4
10	FE-019-40	Fuse (15 Amp., 600 V.)	2
11	FE-023-55	Holder - Fuse (15 Amp., 300 V.)	2
12	00-411499-00003	Buzzer (230 V.)	1
13	SD-034-49	Self-Tapping Screw 8-32 x 1/2 Slotted. Hex Washer Hd., Type T	1
14	WL-014-10	Lockwasher 1/4 External Shakeproof (SST)	1
15	00-411690-00002	Timer (200-240 V.) (60 Hz.) (1-Hr.)	1
16	00-913149	Kit - Temperature Control (With Harness)	1
17	SC-114-83	Mach. Screw 6-32 x 1/4 Slotted Pan Hd. (SST)	2
18	WS-028-20	Washer (SST)	2
19	00-340324-00009	Switch (D.P.D.T.)	2
20	00-354575-00007	Light - Indicator (250 V.)	1
21	00-354575-00009	Light - Indicator (250 V.)	1
22	00-913102-00161	Light - Indicator (Double) (Incls. Items 20 & 21)	1
23	00-340324-00006	Switch - Toggle (Power ON)	1
	00-353589-00001	Probe Temperature (SST) Solid State	1

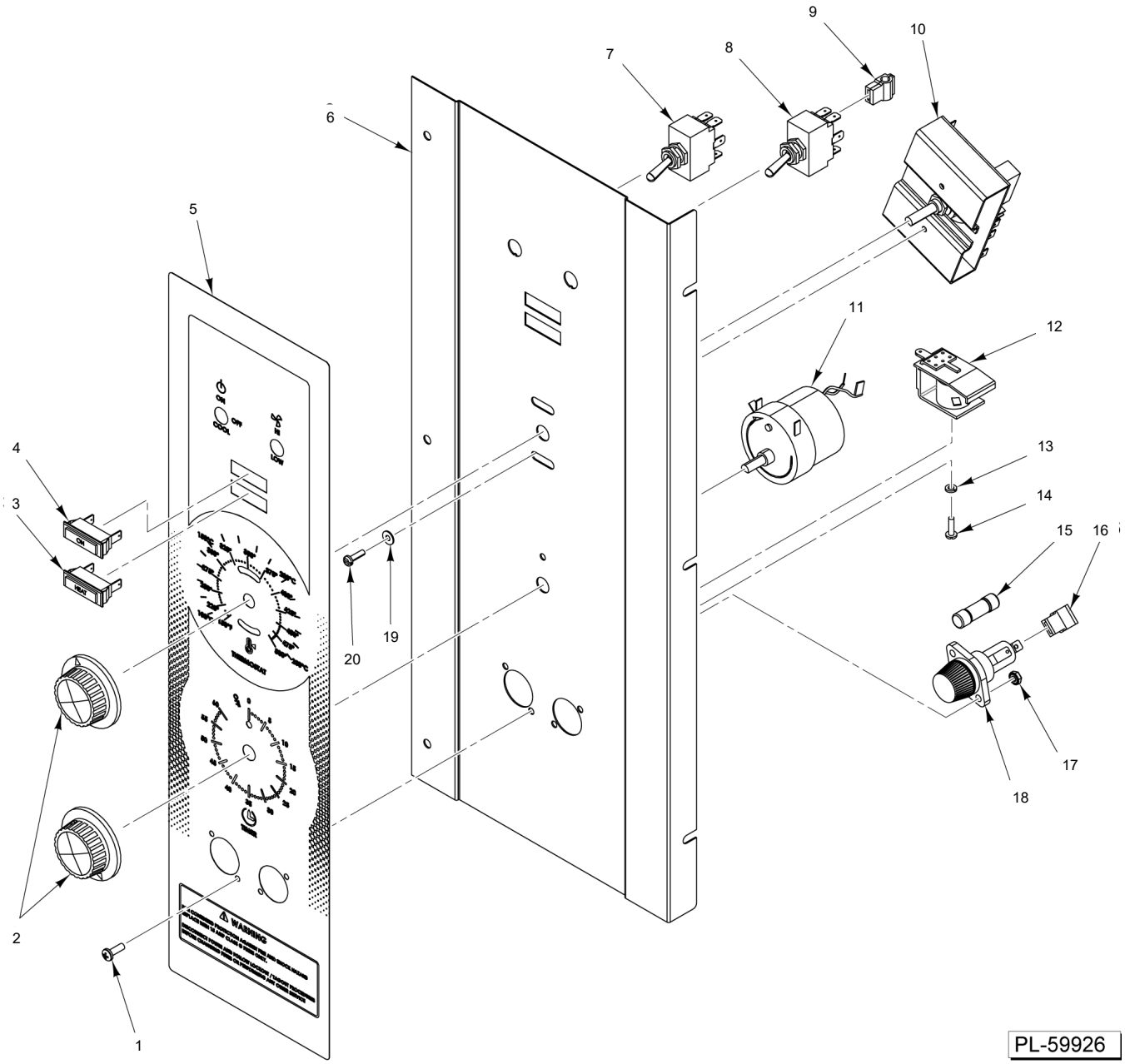

CONTROL PANEL
(ECO2D)
(BEFORE S/N 482055841)

CONTROL PANEL
(ECO2D)
(BEFORE S/N 482055841)

ILLUS. PL-59926	PART NO.	NAME OF PART	AMT.
1	SD-024-40	Self-Tapping Screw 6-32 x 5/8 Phil. Pan Hd., Type TT (SST)	4
2	00-411242-00001	Knob	2
3	00-354575-00009	Light - Indicator (250 V.)	1
4	00-354575-00007	Light - Indicator (250 V.)	1
5	00-428125-00001	Overlay - Panel	1
6	00-428131-000G1	Panel - Control	1
7	00-340324-00008	Switch (4P.D.T.)	1
8	00-340324-00009	Switch (D.P.D.T.)	1
9	00-412575-00007	Insulator - Terminal	2
10	00-913149	Kit - Temperature Control (With Harness)	1
11	00-411690-00002	Timer (200-240 V.) (60 Hz.) (1-Hr.)	1
12	00-411499-00003	Buzzer (230 V.)	1
13	WL-003-12	Lockwasher #8 Helical	1
14	SC-114-83	Mach. Screw 6-32 x 1/4 Slotted Pan Hd. (SST)	1
15	FE-019-40	Fuse (15 Amp., 600 V.)	2
16	00-412575-00007	Insulator - Terminal	2
17	NS-046-89	Nut Assy. 6-32 Hex KEPS	4
18	FE-023-55	Holder - Fuse (15 Amp., 300 V.)	2
19	WS-029-61	Washer (SST)	2
20	SC-114-83	Mach. Screw 6-32 x 1/4 Slotted Pan Hd. (SST)	2
21	00-353589-00001	Probe Temperature (SST) Solid State Not Shown	AR

16 Harness - Wiring
PART NOT ILLUSTRATED

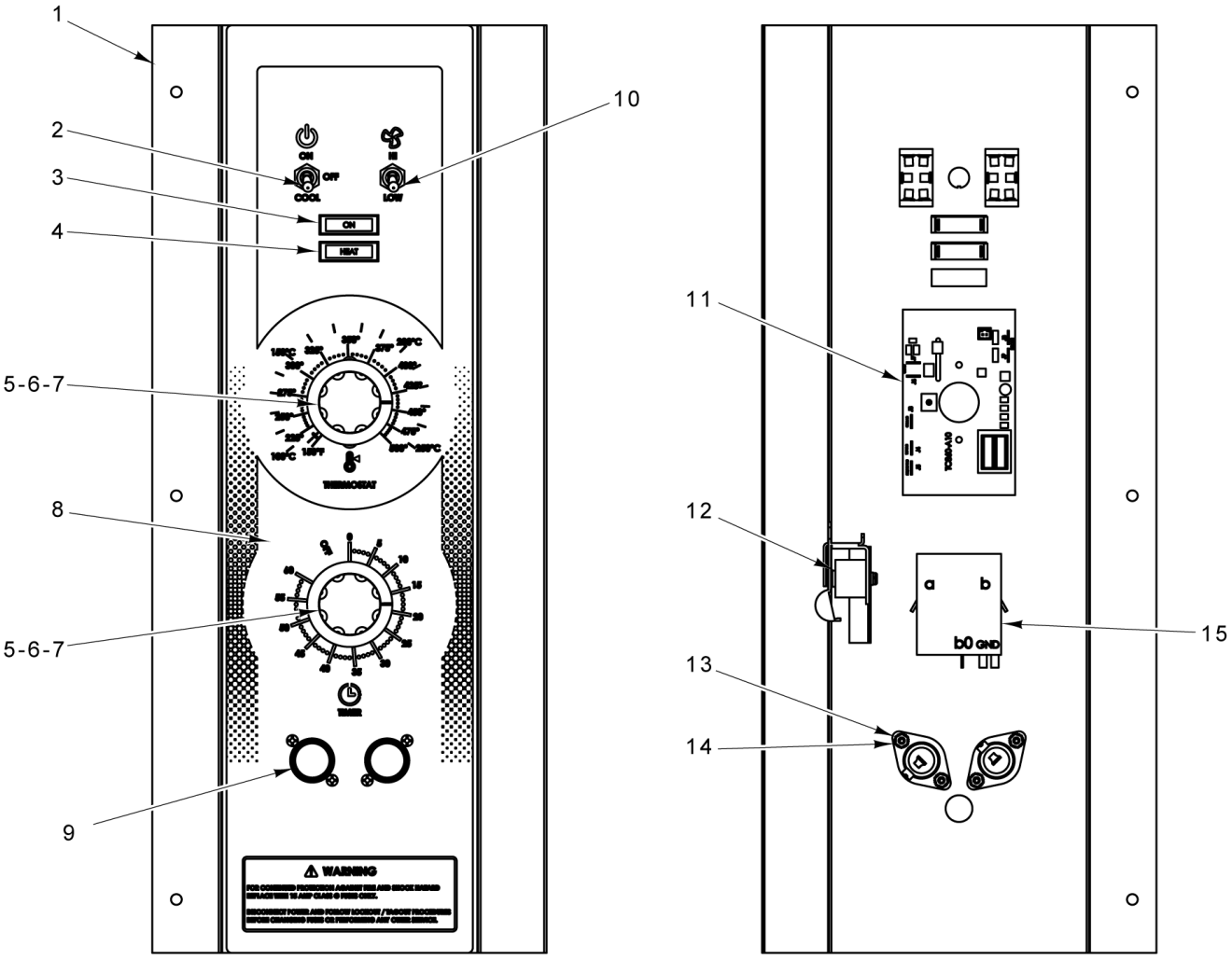

PL-62211

CONTROL PANEL
(ECO2D)
(STARTING S/N 482055841)

CONTROL PANEL
(ECO2D)
(STARTING S/N 482055841)

ILLUS. PL-62211	PART NO.	NAME OF PART	AMT.
1	00-962873-000G1	Panel - Control	1
2	00-340324-00008	Switch (4P.D.T.)	1
3	00-354575-00007	Light - Indicator (250 V.)	1
4	00-354575-00009	Light - Indicator (250 V.)	1
5	00-411242-00001	Knob	2
6	SC-114-83	Mach. Screw 6-32 x 1/4 Slotted Pan Hd. (SST)	5
7	WS-029-61	Washer (SST)	4
8	00-962875-00001	Overlay	1
9	00-960961-000G1	Holder - Fuse	2
10	00-340324-00009	Switch (D.P.D.T.)	1
11	00-428897-00008	Board - Temperature Control, NCC	1
12	00-411499-00003	Buzzer (230 V.)	1
13	SD-024-40	Self-Tapping Screw 6-32 x 5/8 Phil. Pan Hd., Type TT (SST)	4
14	NS-046-89	Nut Assy. 6-32 Hex KEPS	4
15	00-962846-00002	Timer (240 V.) (60 Hz.) (1-Hr.)	1
16	00-962906-000G1	Harness - Wiring	1

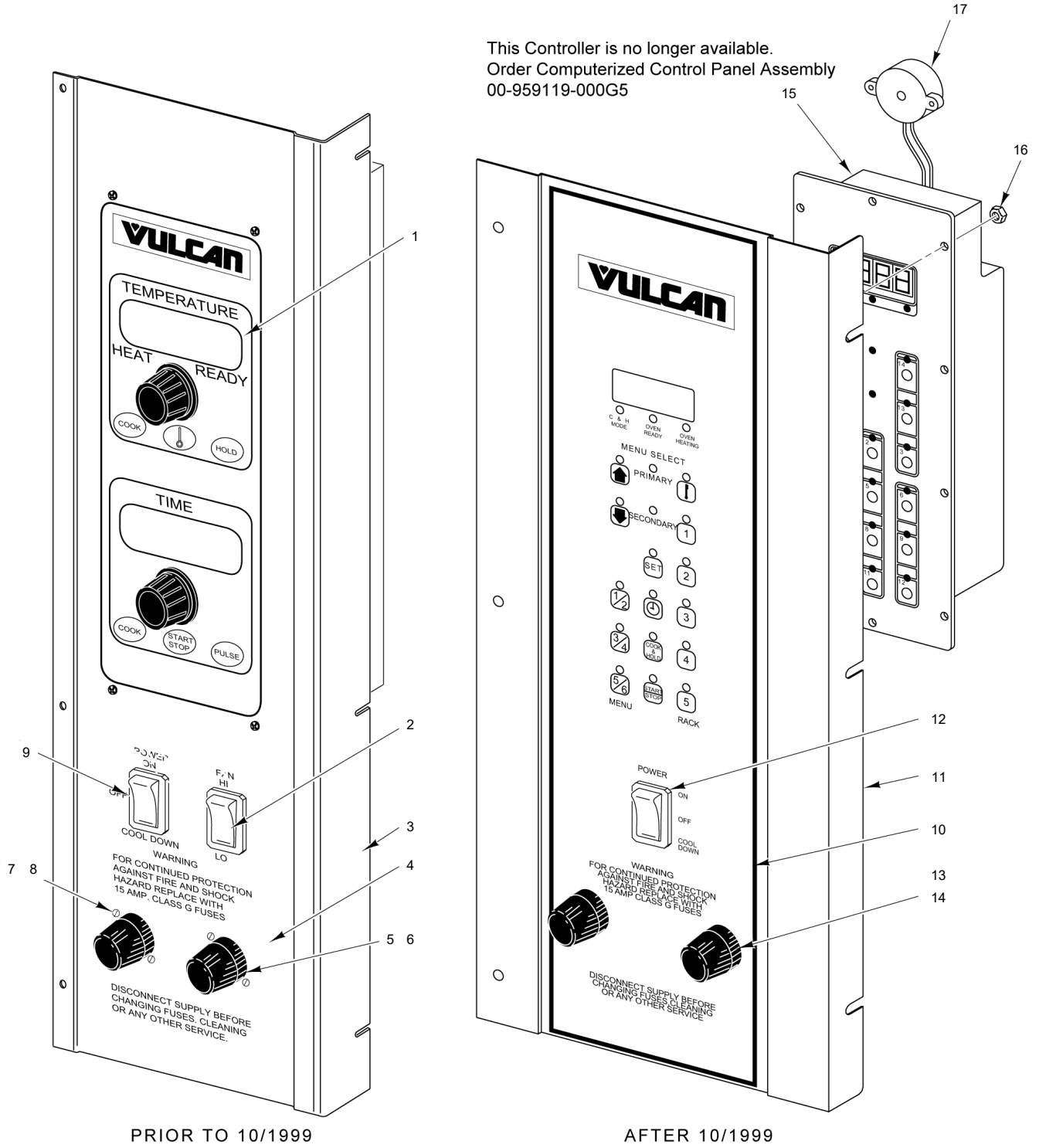

PL-59928

COMPUTERIZED CONTROLS
(ECO2C)
(PREVIOUS CONSTRUCTION)

COMPUTERIZED CONTROLS
(ECO2C)
(PREVIOUS CONSTRUCTION)

ILLUS. PL-59928	PART NO.	NAME OF PART	AMT.
1	00-355903-00004	Controller (With Roast, Hold, & Gentle Bake)	1
2	00-358628-00002	Switch - Rocker (2-Position)	1
3	00-422924-000G1	NLA - Obsolete--Panel - Control	1
4	00-422584-00001	Overlay	1
5	FE-023-55	Holder - Fuse (15 Amp., 300 V.)	2
6	FE-019-40	Fuse (15 Amp., 600 V.)	2
7	NS-046-51	Nut Assy. 8-32 Hex	4
8	SC-114-27	Mach. Screw 8-32 x 1/2 Phil. Pan Hd.	4
9	00-358628-00001	Switch - Rocker (3-Position)	1
10	00-426698-00001	Overlay (ECO2C)	1
11	00-426694-000G1	Panel - Control	1
12	00-358628-00001	Switch - Rocker (3-Position)	1
13	FE-023-55	Holder - Fuse (15 Amp., 300 V.)	2
14	FE-019-40	Fuse (15 Amp., 600 V.)	2
*15		Controller	1
16	NS-044-05	Nut Assy. 6-32 Hex KEPS	6
17	00-423918-00001	Electronic Beeper	1
	00-920883-00002	Probe - Thermocouple (With 40 In. Leads)	1
	00-342132-00001	Guard - Thermo	1
	00-402558-00004	Clip - Tubing	1
	00-959119-000G5	Panel - Control Assy. (Complete)	1

* (No Longer Available, Order 00-959119-000G5)

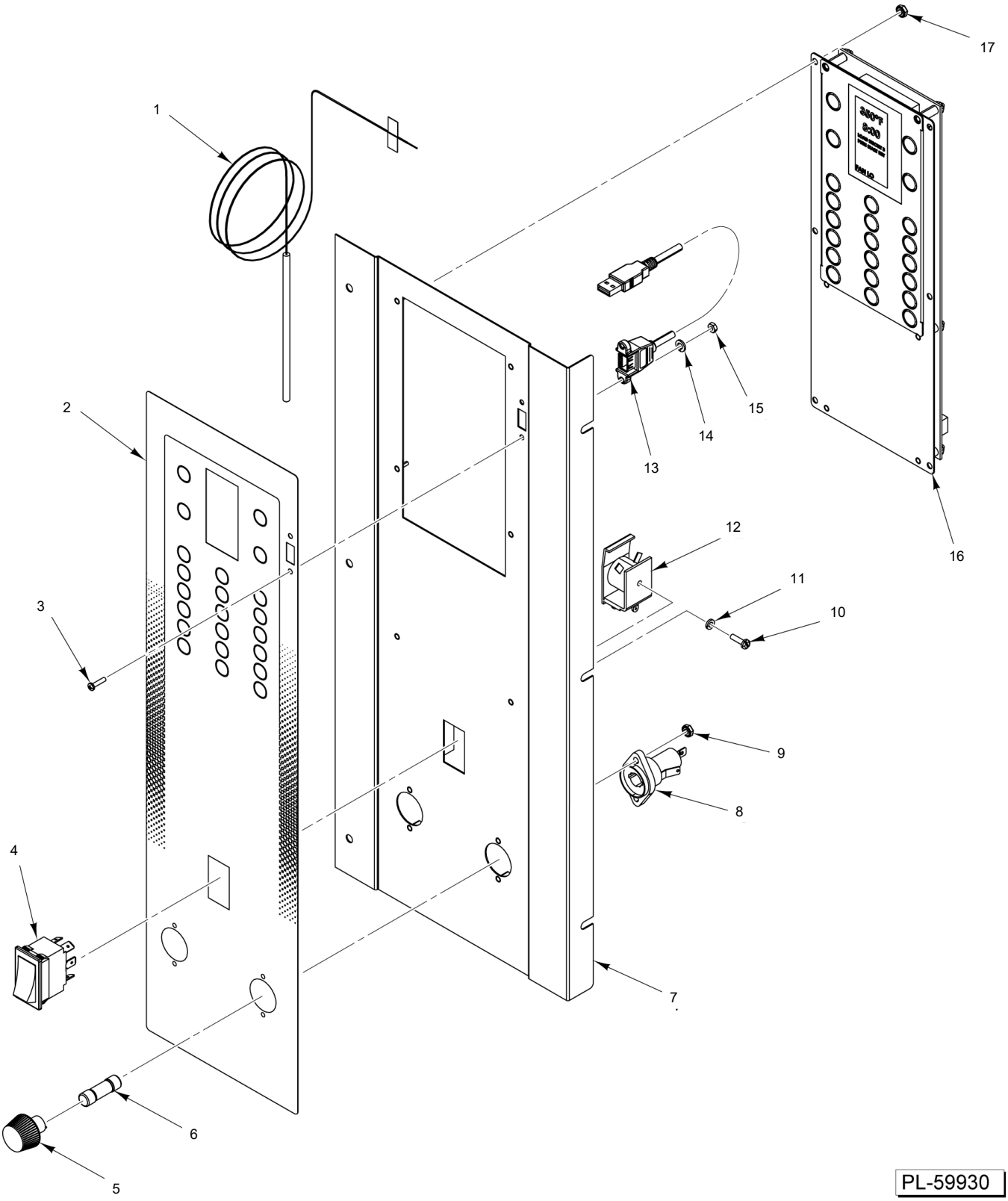

COMPUTERIZED CONTROLS
(ECO2C)
(CURRENT CONSTRUCTION)

COMPUTERIZED CONTROLS
(ECO2C)
(CURRENT CONSTRUCTION)

ILLUS. PL-59930	PART NO.	NAME OF PART	AMT.
1	00-920883-00003	Probe - Temperature For Computer Controller	1
2	00-959126-00002	Overlay (Vulcan)	1
3		Mach. Screw 4-40 x 1/2 Phil. Pan Hd.	2
4	00-358628-00001	Switch - Rocker (3-Position)	1
5	FE-023-55	Holder - Fuse (15 Amp., 300 V.) (Incls. Item 8)	2
6	FE-019-40	Fuse (15 Amp., 600 V.)	2
7	00-959119-000G2	Panel - Control Assy. (Complete) (240 V.)	1
8	FE-023-55	Holder - Fuse (15 Amp., 300 V.) (Incls. Item 5)	2
9	NS-046-89	Nut Assy. 6-32 Hex KEPS	4
10	SC-114-83	Mach. Screw 6-32 x 1/4 Slotted Pan Hd. (SST)	1
11	WL-003-12	Lockwasher #8 Helical	1
12	00-411499-00003	Buzzer (230 V.)	1
13	00-959000-000G1	Cable Assy. (USB) (1 Ft.) (Incls. Items 3, 14, & 15)	1
14		Lockwasher	2
15		Nut 4-40 Hex	2
16	00-959077-00001	Controller - Cooking (NCC)	1
17	NS-046-89	Nut Assy. 6-32 Hex KEPS	6

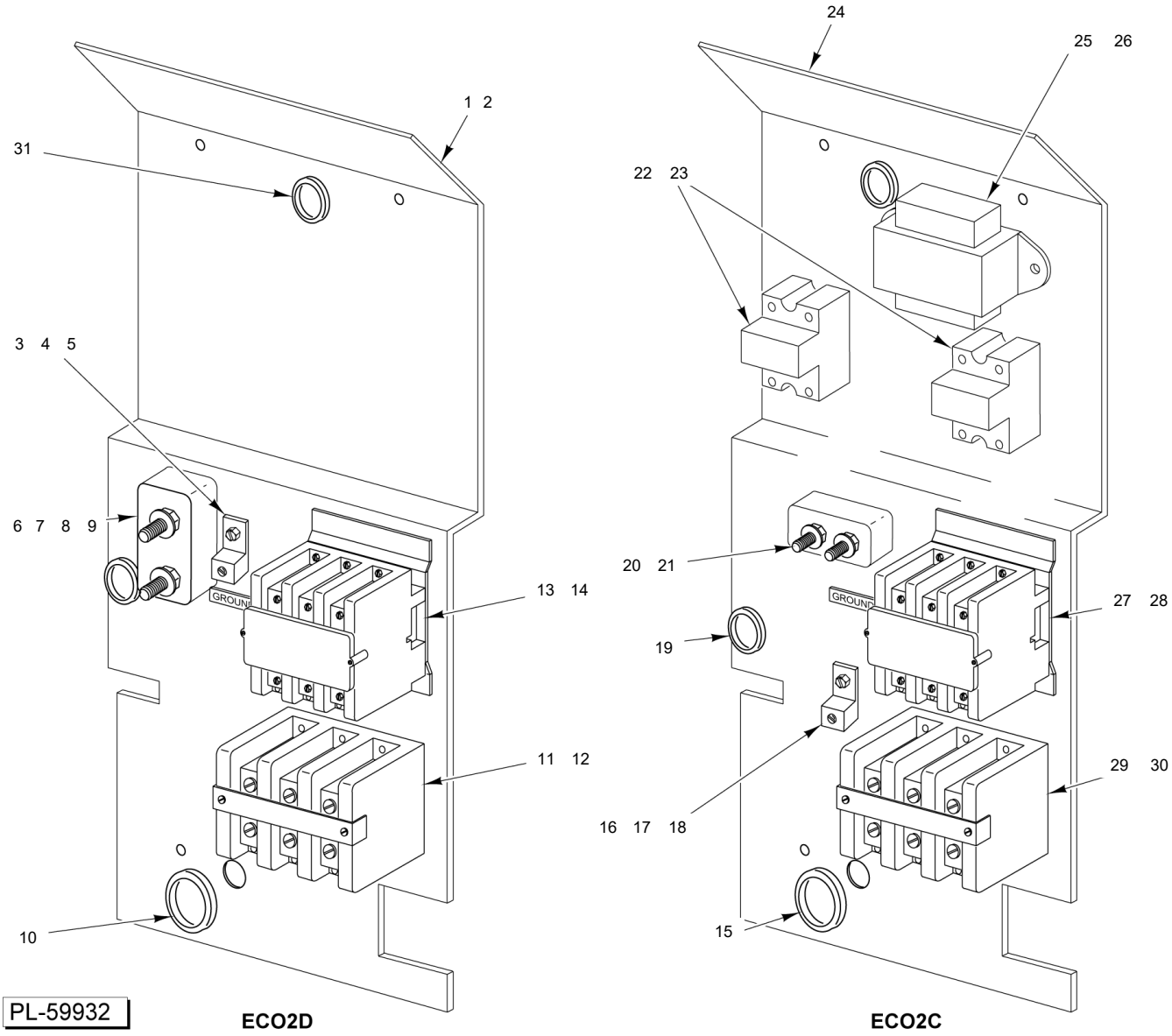

COMPONENT PANEL

COMPONENT PANEL

ILLUS. PL-59932	PART NO.	NAME OF PART	AMT.
1	00-422712-00001	Panel - Component (Before S/N 481929290)	1
2	00-961783-00001	Panel - Component (Starting S/N 481929290)	1
3	00-417856-00001	Lug - Grounding (With Set Screw)	1
4	SD-032-07	Self-Tapping Screw 10-24 x 1/2 Hex. Hex Washer Hd., Type TT	2
5	WL-004-40	Lockwasher #10 Helical	1
6	00-417934-000G1	Block Assy. - Porcelain.	1
7	SD-034-52	Self-Tapping Screw 8-32 x 1 Slotted. Hex Washer Hd., Type T	2
8	WS-023-20	Washer	2
9	NS-044-09	Nut Assy. 10-24 Hex KEPS	1
10	FE-023-53	Bushing - Snap	1
11	00-410472-00008	Block - Terminal (3-Pole)	1
12	SD-032-07	Self-Tapping Screw 10-24 x 1/2 Hex. Hex Washer Hd., Type TT	2
13	00-411497-000C7	Contactor (3-Pole) (50 Amp., 230 V.)	1
14	SD-032-07	Self-Tapping Screw 10-24 x 1/2 Hex. Hex Washer Hd., Type TT	2
15	FE-023-53	Bushing - Snap	1
16	00-417856-00001	Lug - Grounding (With Set Screw)	1
17	SD-032-07	Self-Tapping Screw 10-24 x 1/2 Hex. Hex Washer Hd., Type TT	2
18	WL-004-40	Lockwasher #10 Helical	1
19	FE-016-32	Bushing - Snap (Electrical)	2
20	00-417934-000G1	Block Assy. - Porcelain.	1
21	SD-034-52	Self-Tapping Screw 8-32 x 1 Slotted. Hex Washer Hd., Type T	2
22	00-821875-00002	Relay - Solid State (50 Amp.)	2
23	SD-034-49	Self-Tapping Screw 8-32 x 1/2 Slotted. Hex Washer Hd., Type T	4
24	00-422712-00001	Panel - Component	1
25	00-421758-000G4	Transformer Assy.	2
26	SD-032-07	Self-Tapping Screw 10-24 x 1/2 Hex. Hex Washer Hd., Type TT	2
27	00-411497-000C7	Contactor (3-Pole) (50 Amp., 230 V.)	1
28	SD-034-49	Self-Tapping Screw 8-32 x 1/2 Slotted. Hex Washer Hd., Type T	2
29	00-410472-00008	Block - Terminal (3-Pole)	1
30	SD-032-07	Self-Tapping Screw 10-24 x 1/2 Hex. Hex Washer Hd., Type TT	2
31	FE-016-32	Bushing - Snap (Electrical)	2

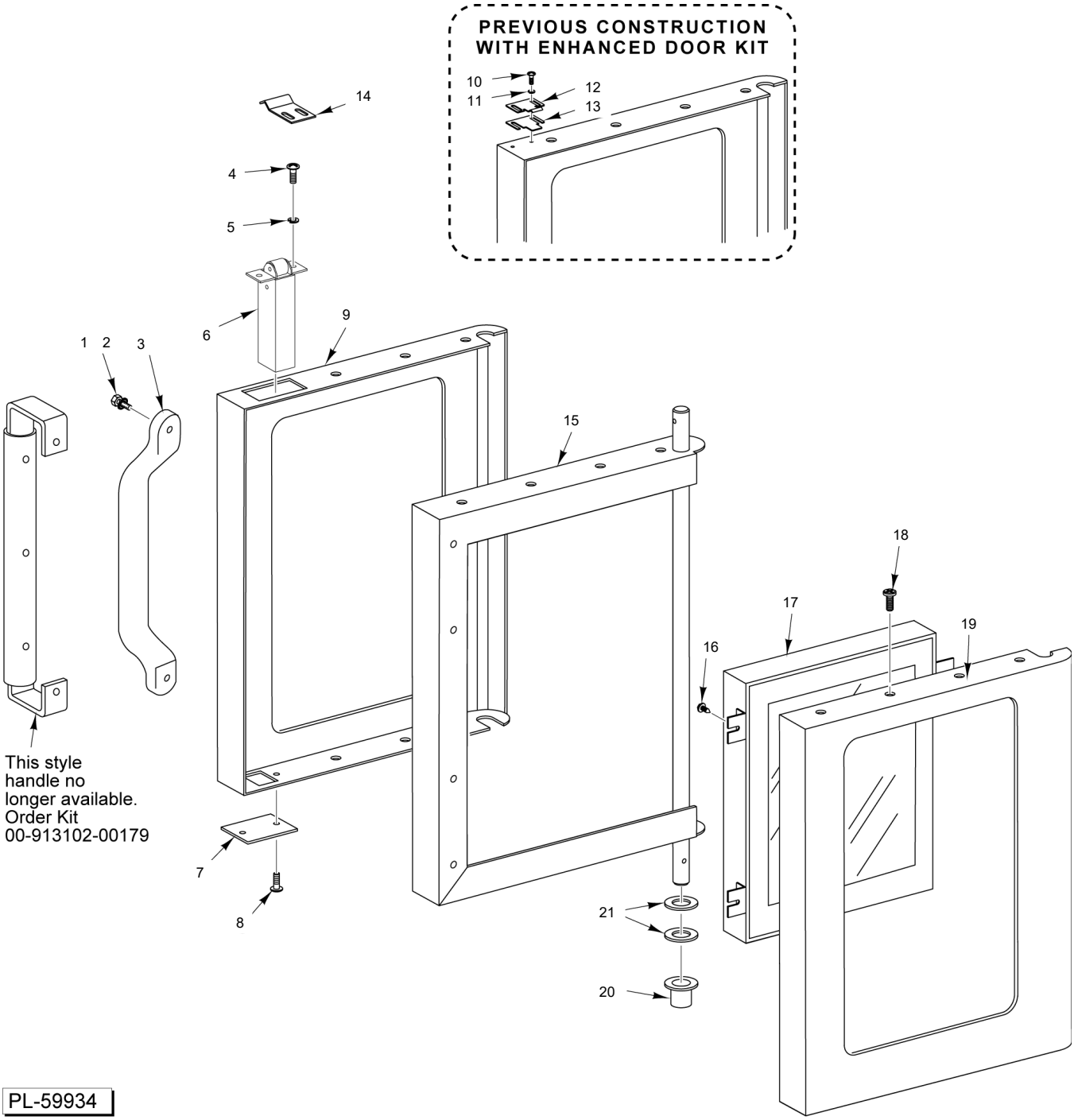

DOOR ASSEMBLY

DOOR ASSEMBLY

ILLUS. PL-59934	PART NO.	NAME OF PART	AMT.
1	00-959087-00001	Screw 1/4-20 x 1-1/4 Black Hd.	2
2	WL-013-14	Lockwasher 1/4 Internal Shakeproof (SST)	2
3	00-913102-00179	Kit - Handle (Incls. Items 1 & 2)	1
4	SC-117-73	Mach. Screw 10-32 x 5/8 Phil. Truss Hd.	2
5	WL-019-35	Lockwasher #10 Internal	2
6	00-497586-00001	Latch - Door Roller (Mounted to Door)	1
7	00-499264-00001	Plate - Latch Cutout	1
8	SD-034-22	Self-Tapping Screw 10-16 x 5/8 Phil. Truss Hd., Type AB	2
9	00-360887-00001	Panel - Outer Door (With Window)	1
10	SC-115-51	Mach. Screw 10-32 x 1/2 Phil. Truss Hd.	2
11	WL-019-35	Lockwasher #10 Internal	2
12	00-423847-00001	Strike - Door (Mounted to Door)	2
13	00-423848-00001	Shim - Door Strike	1
14	00-499270-00001	Strike - Door (Attaches to Upper "C" Channel)	1
15	00-359703-000G1	Door Frame Assy.	1
16	SD-034-62	Self-Tapping Screw 10-32 x 1/2 Slotted. Hex Washer Hd., Type T	4
17	00-358534-00001	Window Assy.	1
18	SD-034-22	Self-Tapping Screw 10-16 x 5/8 Phil. Truss Hd., Type AB	7
19	00-360889-000G1	Panel - Inner Door (With Window)	1
20	00-347080-00002	Bearing - Door Shaft	1
21	00-343143-00002	Washer	4
	00-423014-000G2	Door Kit - Enhanced (Prior to 7/15/08) (Incls. Items 4, 5, 7, & 12)	1
	00-499305-000G1	Door Assy.	1

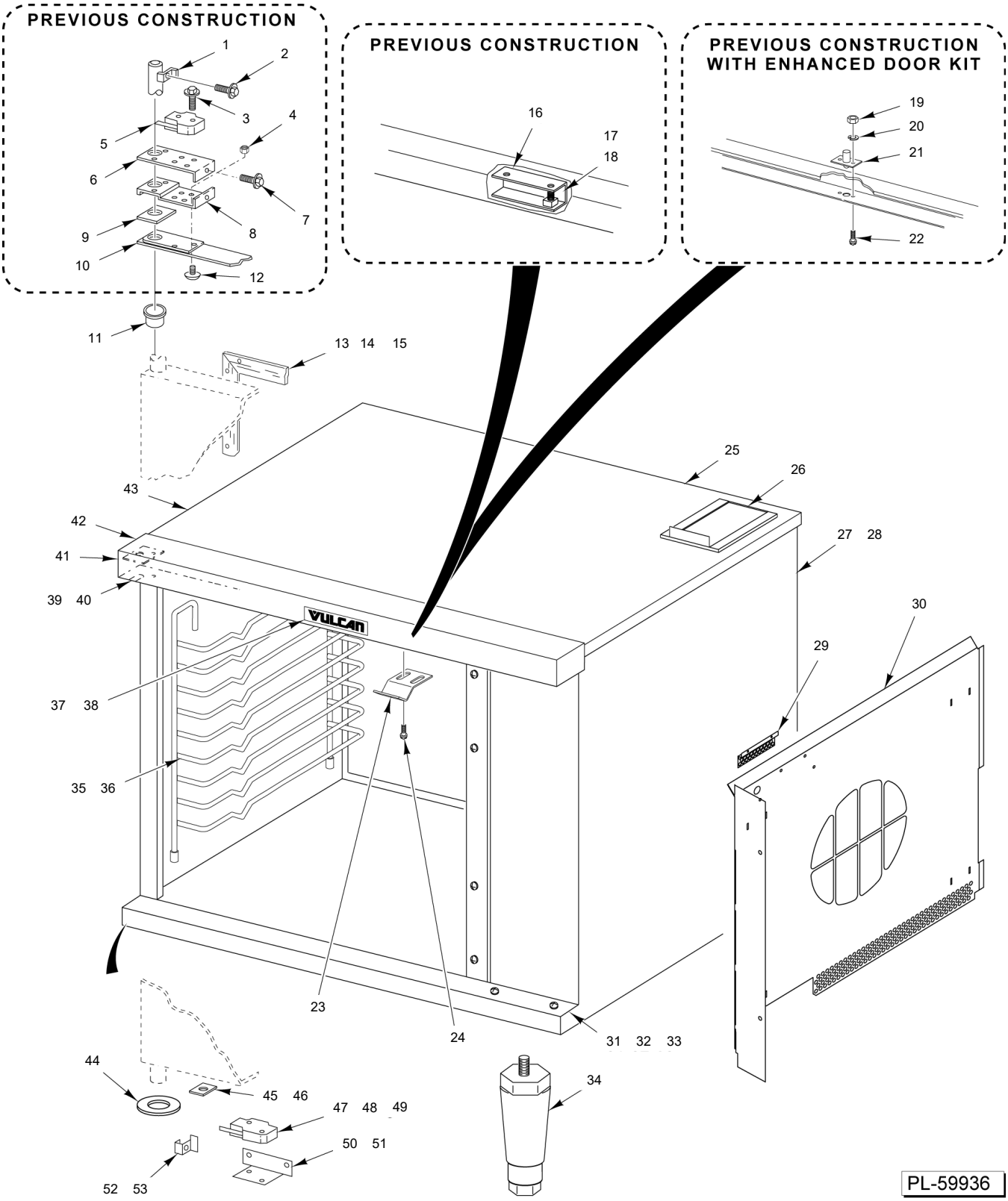

CABINET
(BEFORE S/N 481929290)

CABINET
(BEFORE S/N 481929290)

ILLUS.	PART NO.	NAME OF PART	AMT.
PL-19926			
1	00-427855-00001	Striker - Door Switch (Used on machines built prior to 12/2008)	1
2	SD-036-30	Self-Tapping Screw 8-32 x 1/4 Slotted. Hex Washer Hd., Type T	1
3	SD-034-47	Self-Tapping Screw 6-32 x 1 Slotted. Hex Washer Hd., Type T	2
4	NS-046-52	Nut Assy. 1/4-20 Hex	2
5	00-353782-00001	Switch - Door (Machines built prior to 8/2001)	1
6	00-353780-00001	Bracket - Switch (Machines built prior to 8/2001)	1
7	SD-036-30	Self-Tapping Screw 8-32 x 1/4 Slotted. Hex Washer Hd., Type T	1
8	00-353778-00001	Support - Switch	1
9	00-353482-00001	Spacer	1
10	00-353483-00001	Plate - Upper Door Bearing	1
11	00-347080-00002	Bearing - Door Shaft	1
12	SC-022-40	Mach. Screw 1/4-20 x 3/4 Phil. Flat Hd. (SST)	2
13	00-423281-00001	Seal - Door (LH or RH)	2
14	00-423280-00001	Seal - Door (Top & Bottom)	2
15	SD-034-05	Self-Tapping Screw 6-20 x 3/8 Phil. Pan Hd., Type AB	16
16	00-355344	Channel - Latch (Used on machines built prior to 12/1997)	1
17	00-417810-00003	Spring - Compression (Used on machines built prior to 12/1997)	1
18	00-411794-00001	Catch - Door (Used on machines built prior to 12/1997)	1
19	NS-046-88	Nut Assy. 10-32 Hex	2
20	WL-019-35	Lockwasher #10 Internal	2
21	00-347545-00001	Catch Assy. - Door (Roller Ball Style)	1
22	SC-115-51	Mach. Screw 10-32 x 1/2 Phil. Truss Hd.	2
23	00-497585-00001	Plate - Strike	1
24	SD-034-22	Self-Tapping Screw 10-16 x 5/8 Phil. Truss Hd., Type AB	2
25	00-354476-00002	Back (SST)	1
26	00-354482-00001	Vent Extension	1
27	00-422715-00002	Panel - Side (RH) (SST)	1
28	00-957647-000G1	Panel - Side (LH) (SST)	1
29	00-499274-00001	Cover - Probe	1
30	00-360869-000G1	Blower Baffle Weldment (Enamel)	1
31	00-422714-00001	Cover - Lower (Used on machines built prior to 12/2008)	1
32	00-957632-00001	Cover - Lower (Used on machines built after 12/2008)	1
33	00-422592-00001	Sill - Door	1
34	00-348164-00001	Leg - Adjustable Chrome Plated (4 In.)	4
35	00-347498-00003	Guide - Rack (LH) (Used on machines built prior to 10/26/2012)	1
	00-959382-00001	Guide - Rack (LH & RH) (Used on machines built after to 10/26/2012)	2
36	00-347498-00004	Guide - Rack (RH) (Used on machines built prior to 10/26/2012)	1
37	00-957916-00003	Nameplate - Small (Vulcan)	1
38	NS-047-79	Pal Nut 3/16	2
39	00-499269-00001	Support - Upper Door (Current Construction)	1
40	00-422590-00001	Support - Door Upper Reversible (Previous Construction)	1
41	00-422588-00001	Plate - Cover	1
42	00-347593-00001	Cover - Top	1
43	00-422595-00002	Top (SST)	1
44	00-343143-00002	Washer	1
45	00-353790-00001	Stop	1
46	SD-008-27	Self-Tapping Screw 10-16 x 1/2 Phil. Truss Hd., Type B	1
47	00-411496-000F1	Switch - Micro	1
48	SC-123-87	Mach. Screw 6-32 x 7/8 Slotted Pan Hd.	1
49	NS-046-89	Nut Assy. 6-32 Hex KEPS	1
50	00-499338-00001	Bracket - Door Switch (Used on machines built after 12/2008)	1
51	00-426854-00001	Bracket - Switch Mounting (Used on machines built prior to 12/2008)	1
52	00-499340-00001	Bracket - Shaft (Micro Switch) (Used on machines built after 12/2008)	1
53	SD-034-52	Self-Tapping Screw 8-32 x 1 Slotted. Hex Washer Hd., Type T	1
	00-423014-000G2	Door Kit - Enhanced (Prior to 7/15/08) (Incls. Items 19 thru 22)	1
	00-347497-00002	Rack (Used on machines built prior to 10/26/2012)	AR
	00-959381-00001	Rack (Used on machines built after to 10/26/2012)	AR

CABINET
(BEFORE S/N 481929290)

ILLUS.	PART NO.	NAME OF PART	AMT.
PL-19926			
	00-353948-00002	Caster (Swivel With Brake) (6 In.)	2
	00-341655-00007	Caster (Rigid) (5 In.)	2
	00-342154-00002	Plug - Hole	1

NOTES

32	00-423014-000G2	Door Kit - Enhanced	37	00-961703-00001	Support - Lower Door
33	00-347497-00002	Rack	38	00-961834-00001	Bracket - Door Switch
34	00-353948-00002	Caster Assy.	39	00-961711-00001	Bracket - Door Bushing
35	00-341655-00007	Caster	40	00-961709-00001	Bracket - Upper Door
36	00-342154-00002	Plug - Hole	41	00-961710-00001	Bracket - Door Catch

PARTS NOT ILLUSTRATED

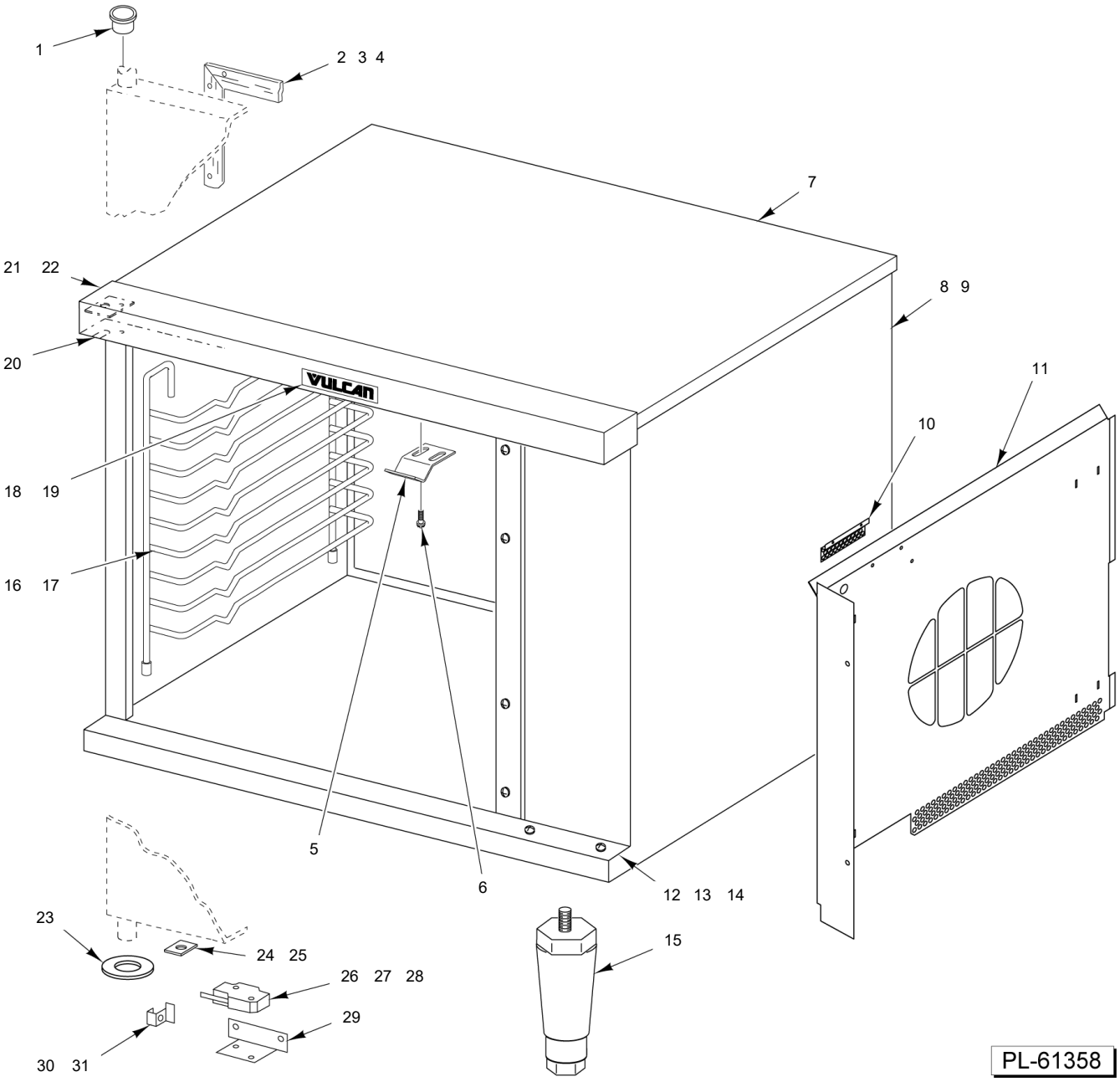

CABINET
(STARTING S/N 481929290)

CABINET
(STARTING S/N 481929290)

ILLUS. PL-61358	PART NO.	NAME OF PART	AMT.
1	00-347080-00002	Bearing - Door Shaft	1
2	00-423281-00001	Seal - Door (LH or RH)	2
3	00-423280-00001	Seal - Door (Top & Bottom)	2
4	SD-034-05	Self-Tapping Screw 6-20 x 3/8 Phil. Pan Hd., Type AB	16
5	00-497585-00001	Plate - Strike	1
6	SD-034-22	Self-Tapping Screw 10-16 x 5/8 Phil. Truss Hd., Type AB	2
7	00-354476-00002	Back (SST)	1
8	00-961747-00001	Panel - Right	1
9	00-961745-00001	Panel - Left	1
10	00-499274-00001	Cover - Probe	1
11	00-961759-00001	Cover - Fan	1
12	00-961769-00001	Trim - Bottom	1
13	00-961786-00001	Cover - Lower	1
14	00-422592-00001	Sill - Door	1
15	00-348164-00001	Leg - Adjustable Chrome Plated (4 In.)	4
16	00-347498-00003	Guide - Rack (LH)	1
17	00-347498-00004	Guide - Rack (RH)	1
18	00-957916-00003	Nameplate - Small (Vulcan)	1
19	NS-047-79	Pal Nut 3/16	2
20	00-422590-00001	Support - Door Upper Reversible	1
21	00-961781-00001	Trim - Top	1
22	00-961703-00001	Support - Lower Door	1
23	00-343143-00002	Washer	1
24	00-353790-00001	Stop	1
25	SD-008-27	Self-Tapping Screw 10-16 x 1/2 Phil. Truss Hd., Type B	1
26	00-411496-000F1	Switch - Micro	1
27	SC-123-87	Mach. Screw 6-32 x 7/8 Slotted Pan Hd.	1
28	NS-046-89	Nut Assy. 6-32 Hex KEPS	1
29	00-499338-00001	Bracket - Door Switch	1
30	00-499340-00001	Bracket - Shaft (Micro Switch)	1
31	SD-034-52	Self-Tapping Screw 8-32 x 1 Slotted. Hex Washer Hd., Type T	1
32	00-423014-000G2	Door Kit - Enhanced	1
33	00-347497-00002	Rack	AR
34	00-353948-00002	Caster (Swivel With Brake) (6 In.)	2
35	00-341655-00007	Caster (Rigid) (5 In.)	2
36	00-342154-00002	Plug - Hole	1
37	00-961703-00001	Support - Lower Door	AR
38	00-961834-00001	Bracket - Door Switch	AR
39	00-961711-00001	Bracket - Door Bushing	AR
40	00-961709-00001	Bracket - Upper Door	AR
41	00-961710-00001	Bracket - Door Catch	AR

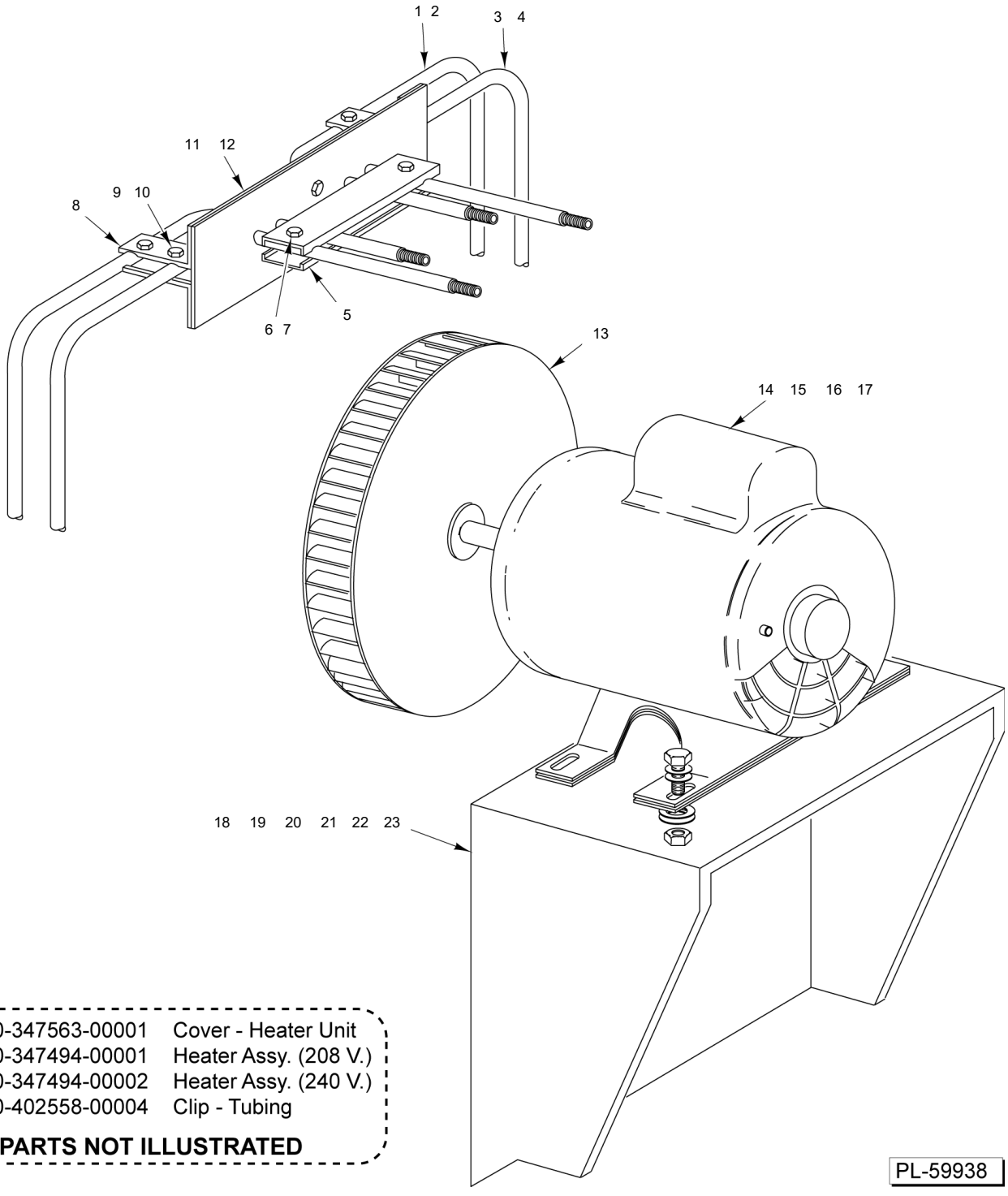

24	00-347563-00001	Cover - Heater Unit
25	00-347494-00001	Heater Assy. (208 V.)
26	00-347494-00002	Heater Assy. (240 V.)
27	00-402558-00004	Clip - Tubing

PARTS NOT ILLUSTRATED

ELECTRIC HEATERS AND BLOWER

ELECTRIC HEATERS AND BLOWER

ILLUS. PL-59938	PART NO.	NAME OF PART	AMT.
1	00-351393-00002	Heater Unit Assy. (Outer) (208 V.)	1
2	00-351393-00004	Heater Unit Assy. (Outer) (240 V.)	1
3	00-351393-00001	Heater Unit Assy. (Inner) (208 V.)	1
4	00-351393-00003	Heater Unit Assy. (Inner) (240 V.)	1
5	00-342131-00001	Clamp - Large	2
6	SC-114-02	Mach. Screw 10-32 x 3/4 Slotted Hex Washer Hd.	2
7	NS-046-88	Nut Assy. 10-32 Hex	2
8	00-342133-00001	Clamp - Small	6
9	SC-114-02	Mach. Screw 10-32 x 3/4 Slotted Hex Washer Hd.	6
10	NS-046-88	Nut Assy. 10-32 Hex	6
11	00-347430-00001	Plate Assy. - Seal	1
12	00-342145-00001	Plate	1
13	00-354262-00001	Blower	1
14	00-358516-00002	Motor 1/2 Hp. (2-Speed) (208-240 V., 50/60 Hz., 1 Ph.) (Previous Construction)	1
15	00-428449-00002	Motor (208-230 V., 60 Hz.) (Before S/N 481929290)	1
16	00-961739-000G2	Motor, 208-240 VAC, 0.5 HP (Starting S/N 481929290) Motor Harness Included with Motor	1
	00-962168-000G1	Motor Harness	AR
17	FE-023-56	Bushing - Electric Snap	1
18	00-347786-00002	Motor Mount Assy. (Previous Construction)	1
19	00-422711-000G3	Motor Mount Assy. (Before S/N 481929290)	1
20	SC-116-84	Cap Screw 5/16-18 x 1-1/8 Hex Hd (Before S/N 481929290)	4
21	WS-029-46	Washer (Before S/N 481929290)	4
22	NS-046-86	Nut Assy. 5/16-18 KEPS Hex (Before S/N 481929290)	2
23	00-358723-00001	Spacer - Steel (Before S/N 481929290)	2
24	00-347563-00001	Cover - Heater Unit	1
25	00-347494-00001	Heater Assy. (208 V.) (Incls. Items 1, 3, & 5 thru 12)	1
26	00-347494-00002	Heater Assy. (240 V.) (Incls. Items 2 & 4 thru 12)	1
27	00-402558-00004	Clip - Tubing	2