SERVICE MANUAL



HALF-SIZE ECO2 & GCO2 SERIES CONVECTION OVENS

ELECTRIC	**ECO2D**	**ML-114570**
	ECO2C	**ML-114572**
GAS	**GCO2D**	**ML-114573**
	GCO2C	**ML-114571**

- NOTICE -

This Manual is prepared for the use of trained Hobart Service Technicians and should not be used by those not properly qualified.

This manual is not intended to be all encompassing. If you have not attended a Hobart Service School for this product, you should read, in its entirety, the repair procedure you wish to perform to determine if you have the necessary tools, instruments and skills required to perform the procedure. Procedures for which you do not have the necessary tools, instruments and skills should be performed by a trained Hobart Service Technician.

The reproduction, transfer, sale or other use of this manual, without the express written consent of Hobart, is prohibited.

This manual has been provided to you by ITW Food Equipment Group LLC ("ITW FEG") without charge and remains the property of ITW FEG, and by accepting this manual you agree that you will return it to ITW FEG promptly upon its request for such return at any time in the future.

TABLE OF CONTENTS

SERVICE UPDATES 4
SERVICE UPDATES 4
TIS DOCUMENT LIST - HALF SIZE CONVECTION OVENS 4

GENERAL 6
INTRODUCTION 6
SPECIFICATIONS 6
TOOLS 6

REMOVAL AND REPLACEMENT OF PARTS 8
COVERS AND PANELS 8
TOP FRONT COVER 8
CONTROL PANEL 8
RIGHT SIDE PANEL 8
CONTROL PANEL COMPONENTS 9
BLOWER AND/OR BLOWER MOTOR (UP TO S/N GAS: 481929306 ELECTRIC: 481929289) 12
BLOWER AND/OR BLOWER MOTOR (AFTER S/N GAS: 481929307 ELECTRIC: 481929290) 13
HEAT EXCHANGER (GAS OVENS) 14
BURNER (GAS OVENS UP TO S/N GAS: 481929306) 14
BURNER (AFTER S/N GAS: 481929307) 16
GAS VALVE (SOLENOID) (GAS OVENS) 16
HEATING ELEMENTS (ELECTRIC OVENS) 17
TEMPERATURE PROBE 17
OVEN DOOR (UP TO S/N GAS: 481929306 ELECTRIC: 481929289) 18
REMOVAL 18
DISASSEMBLY 18
OVEN DOOR (AFTER S/N GAS: 481929307 ELECTRIC: 481929290) 19
DOOR CHAIN ADJUSTMENT (SIMULATANEOUS DOORS) 19
DOOR SWITCH (UP TO S/N GAS: 481929306 ELECTRIC: 481929289) 20
DOOR SWITCH (AFTER S/N GAS: 481929307 ELECTRIC: 481929290) 20

SERVICE PROCEDURES AND ADJUSTMENTS 21
TEMPERATURE PROBE TEST (ALL MODELS) 21
VERIFICATION OF SPARK AT SPARK PROBE 21
GAS PRESSURE ADJUSTMENT 22
SPARK IGNITION CONTROL TEST 22
NO GAS IGNITION & NO SPARKING 22
NO GAS IGNITION & NO SPARKING 23
SOLID STATE CONTROL TEST 23
SOLID STATE CONTROL CALIBRATION 24
DOOR SWITCH ADJUSTMENT (UP TO S/N GAS: 481929306 ELECTRIC: 481929289) 25
DOOR SWITCH ADJUSTMENT (AFTER S/N GAS: 481929307 ELECTRIC: 481929290) 25
DOOR REVERSAL 26
DOOR ADJUSTMENT (UP TO S/N GAS: 481929306 ELECTRIC: 481929289) 27
DOOR ADJUSTMENT (AFTER S/N GAS: 481929307 ELECTRIC: 481929290) 27
BLOWER ADJUSTMENT (UP TO S/N GAS: 481929306 ELECTRIC: 481929289) 28
BLOWER ADJUSTMENT (AFTER S/N GAS: 481929307 ELECTRIC: 481929290) 28
ELECTRONIC CONTROL 28
HEATING ELEMENT TEST 29

ELECTRICAL OPERATION 30
COMPONENT FUNCTION 30
COMPONENT LOCATION 31
SEQUENCE OF OPERATION - GAS OVEN 32
IGNITION MODULE 32
SOLID STATE CONTROL 32
ELECTRONIC CONTROL 33

COOLDOWN 33
SEQUENCE OF OPERATION - ELECTRIC OVEN 34
SOLID STATE CONTROL 34
ELECTRONIC CONTROL 34
COOLDOWN 35
SCHEMATICS GAS OVENS 36
WIRING DIAGRAM - GAS OVENS 39
SCHEMATICS - ELECTRIC OVENS 45
WIRING DIAGRAM - ELECTRIC OVENS 48

TROUBLESHOOTING 54
ELECTRIC OVENS 54
GAS OVENS 54

© VULCAN 2025

SERVICE UPDATES

SERVICE UPDATES

October 2024
- Updated CONTROL PANEL COMPONENTS.
- Updated WIRING DIAGRAM - GAS OVENS.
- Updated WIRING DIAGRAM - ELECTRIC OVENS.

June 2019
- Updated SPECIFICATIONS.
- Added BLOWER AND/OR BLOWER MOTOR (AFTER S/N GAS: 481929307 ELECTRIC: 481929290)
- Added BURNER (AFTER S/N GAS: 481929307).
- Added OVEN DOOR (AFTER S/N GAS: 481929307 ELECTRIC: 481929290).
- Added DOOR SWITCH (AFTER S/N GAS: 481929307 ELECTRIC: 481929290).
- Added DOOR SWITCH ADJUSTMENT (AFTER S/N GAS: 481929307 ELECTRIC: 481929290).
- Added DOOR ADJUSTMENT (AFTER S/N GAS: 481929307 ELECTRIC: 481929290).
- Added BLOWER ADJUSTMENT (AFTER S/N GAS: 481929307 ELECTRIC: 481929290).
- Updated SCHEMATICS GAS OVENS.
- Updated WIRING DIAGRAM - GAS OVENS.
- Updated SCHEMATICS - ELECTRIC OVENS.
- Updated WIRING DIAGRAM - ELECTRIC OVENS.

TIS DOCUMENT LIST - HALF SIZE CONVECTION OVENS

SERVICE TAB	
Document Title	**Document Type**
Half Size Convection Ovens and Gas Service Manual	Service Manual
Setting the Igniter Gap	Service Kit Instructions (SKI)
Gas Connections & BTU Flow Capacity	Technical Service Bulletin (TSB)
Machine Data Code Information	Technical Service Bulletin (TSB)

SERVICE TAB (Multimedia)	
Document Title	**Document Type**
3700 Oven Quick Start Guide	Operator
HCEC20 & HEC20D Electric Convection Ovens (ML's 114574 & 114576) Instructions	Instructions
Repair Flood-Damaged Equipment	Misc
Convection Oven Computer Control Guide	Operator

SERVICE TAB (Multimedia)	
Convection Ovens Gas & Electric	Service Instructions
Stand Instructions - Half Size Convection Oven	Service Instructions
Rating Plate Locations on Current Vulcan-Hart/Wolf Range Equipment	Technical Service Bulletin (TSB)
SB770R Door Latch Change on Full Size Convection Ovens (VC4, VC6, SG, WKG, & WKE)	Technical Service Bulletin (TSB)
SB880 Independent Door Handle Assembly for Convection Ovens	Technical Service Bulletin (TSB)
TSB 1037A Hobart to Vulcan "Common" Model Cross Reference List	Technical Service Bulletin (TSB)
TSB 0874 Full Size Convection Ovens - Lighting & Cooling Fan	Technical Service Bulletin (TSB)
TSB 0930 Gas Convection Ovens, Blower Motor & Wheel Change	Technical Service Bulletin (TSB)
TSB 1004E All Half Size & Full Size Unites w/Independent Opening Doors -Enhanced Door Catch Info.	Technical Service Bulletin (TSB)
TSB 1290 HEC. HGC, VEC, VGC Conveyor Ovens - New Temperature Control	Technical Service Bulletin (TSB)

PARTS TAB	
Document Title	**Document Type**
Half Size Electric Convection Ovens Parts Catalog	Parts Catalog

GENERAL

INTRODUCTION

General

This manual will cover half-size electric and gas convection ovens that use either a solid state control or an electronic control.

Procedures in this manual are applicable to both gas and electric ovens unless specified.

SPECIFICATIONS

GAS OVENS						
	GAS DATA				ELECTRICAL DATA	
	INPUT BTU/HR		MANIFOLD PRESSURE		LOAD (Watts)	AMP/LINE
	NATURAL	PROPANE	NATURAL	PROPANE		120V
SINGLE OVEN	2500	2500	3.5" W.C.	10" W.C.	950	8
DOUBLE OVEN	5000	5000	3.5" W.C.	10" W.C.	1900	16

ELECTRIC OVENS												
	TOTAL KW	3-PHASE LOADING (KW PER PHASE)			NOMINAL AMPS PER LINE WIRE							
					3 PHASE						1 PHASE	
					208V			240V			208V	240V
		L1-L2	L2-L3	L1-L3	L1	L2	L3	L1	L2	L3		
SINGLE OVEN	5.5	2.5	0	3.0	22.9	10.4	12.5	19.9	9.0	10.9	26.5	23.0
DOUBLE OVEN	11.0	5.0	0	6.0	45.8	20.8	25.0	39.7	18.0	21.7	52.9	45.9

TOOLS

Standard

- Standard set of hand tools.
- VOM with minimum of NFPA-70E CATIII 600V, UL/CSA/TUV listed. Sensitivity of at least 20,000 ohms per volt and the ability to measure DC micro amps. Meter leads must also be rated at CAT III 600V.
- Clamp on type amp meter with minimum of NFPA-70E CAT III 600V,UL/CSA/TUV listed.
- Temperature tester (thermocouple type).
- ESD (Electrostatic discharge) Protection Kit.

Special

- Hazardous gas leak tester.
- Manometer (Gas Ovens).

REMOVAL AND REPLACEMENT OF PARTS

COVERS AND PANELS



⚠ WARNING

Disconnect the electrical power to the machine and follow lockout / tagout procedures.



⚠ WARNING

Shut off the gas before servicing the unit and follow lockout / tagout procedures.

Top Front Cover

1. The top front cover is secured with four screws, two on each side of cover. Remove these screws then pull cover off unit.

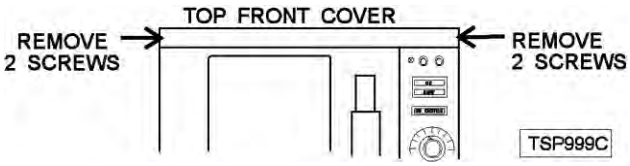

Fig. 1

2. Reverse the procedure to install.

Bottom Front Cover

1. The bottom front cover is secured with four (4) screws, two on each side of cover. Remove these screws then remove the cover from the oven.

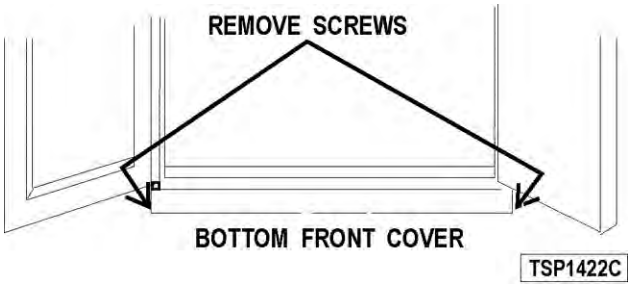

Fig. 2

2. Reverse the procedure to install.

Control Panel

1. On gas models, remove the handle from the manual gas valve.
2. Remove the three screws from the left front and loosen the three screws on the right side of the control panel.
3. Pull the panel away from the oven.

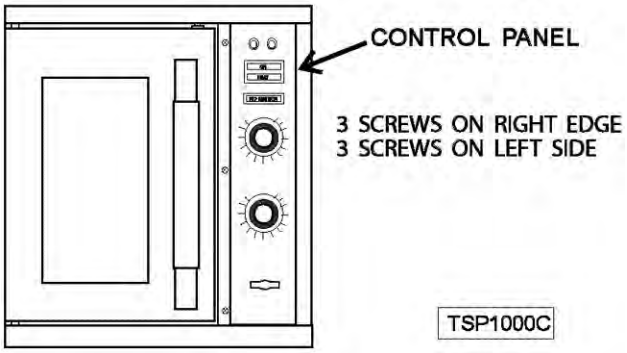

Fig. 3

4. Unplug the lead wires to the control panel components and disconnect the temperature probe leads.
5. Reverse the procedure to install.

Right Side Panel

1. Remove the three screws which secure the right side of the control panel.
2. Loosen the two screws on the right side of the top front cover.
3. Remove the remaining eight screws securing the right side panel.

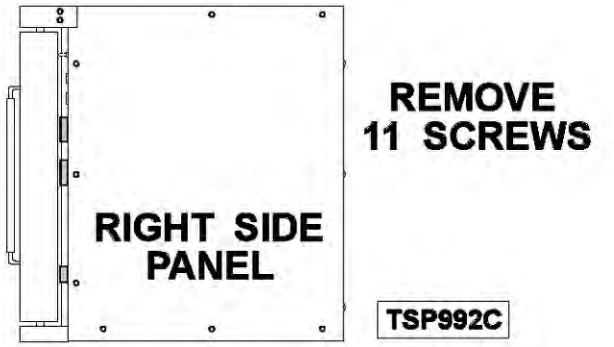

Fig. 4

4. Pull the right side panel out at the bottom then down to remove.
5. Reverse the procedure to install.

CONTROL PANEL COMPONENTS

Removable Components: Listed on illustrations Fig. 5 and Fig. 6.

PROCEDURE

1. Remove CONTROL PANEL COVER.
2. Disconnect wire leads at the component to be replaced.
3. Remove component.
4. Reverse procedure to install.
5. Verify proper oven operation.

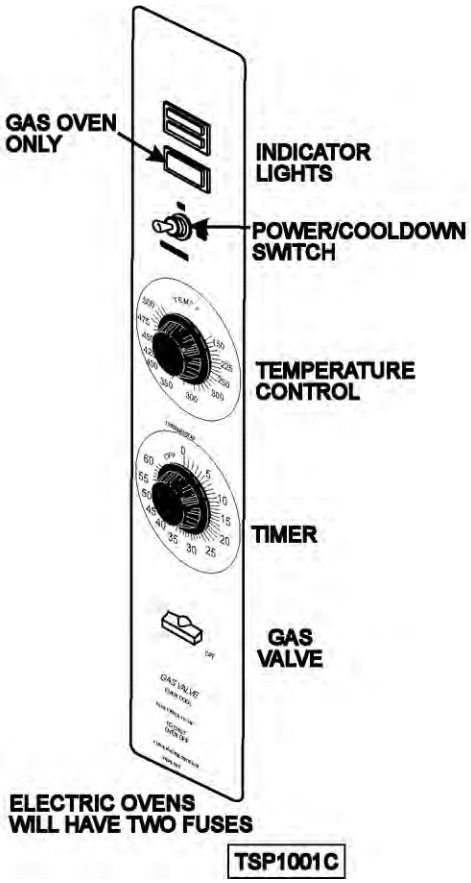

Fig. 5

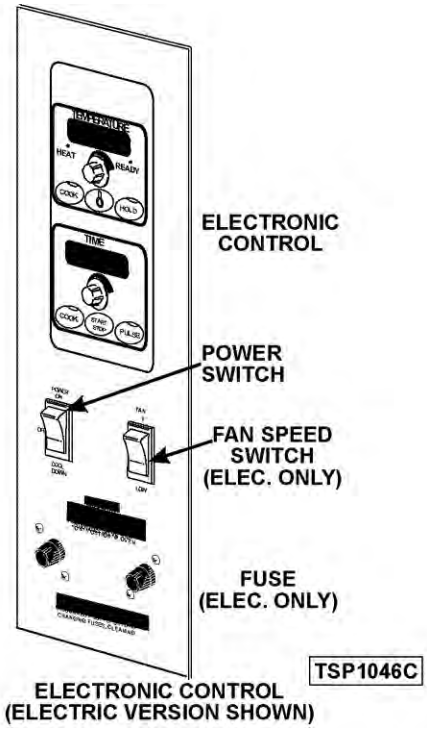

ELECTRONIC CONTROL (ELECTRIC VERSION SHOWN)

Fig. 6

GAS OVENS – STARTING AT SERIAL NUMBER 482054724

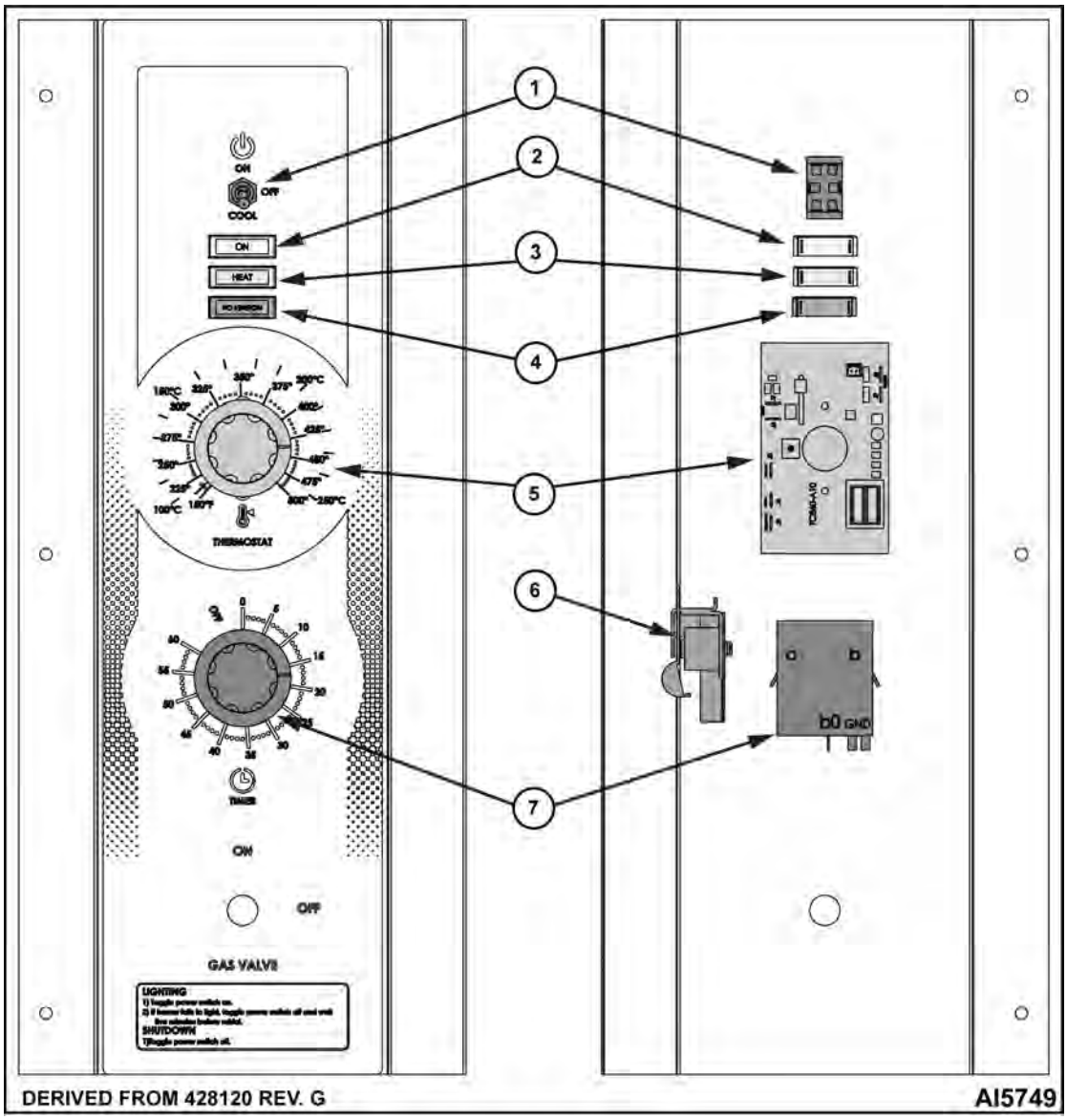

Fig. 7

Item	Name / Electrical Callout	Function
1	Power Toggle Switch (S1)	Determines mode of operation: on, OFF, or COOL DOWN.
2	Indicator "ON" Light	Indicates when oven is powered on.
3	Indicator "HEAT" Light	Indicates when oven is heating.
4	Incicator "NO IGNITION" Light	Indicates no flame detected by flame sensor.
5	Temperature Control	Analog temperature controller.
6	Alarm / Buzzer	Signals the end of a cook cycle when cooking time ends.
7	Timer	Allows user to set cooking time.

ELECTRIC OVENS – STARTING AT SERIAL NUMBER 482055841

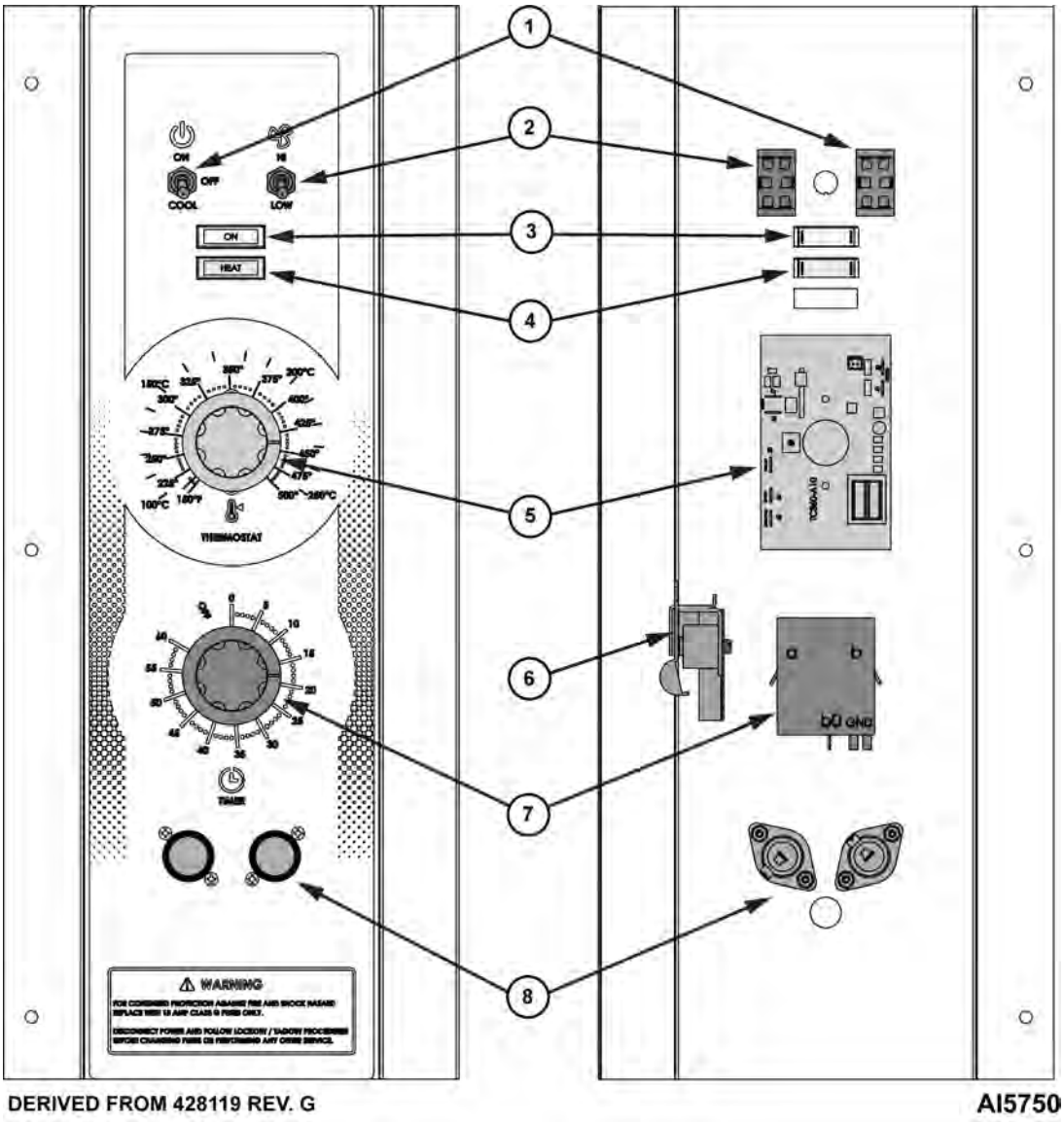

Fig. 8

Item	Name / Electrical Callout	Function
1	Power Toggle Switch (S1)	Determines mode of operation: on, OFF, or COOL DOWN.
2	Fan Speed Switch (S3)	Controls blower motor speed between HIGH and LOW settings.
3	Indicator "ON" Light	Indicates when oven is powered on.
4	Indicator "HEAT" Light	Indicates when oven is heating.
5	Temperature Control	Analog temperature controller.
6	Alarm / Buzzer	Signals the end of a cook cycle when cooking time ends.
7	Timer	Allows user to set cooking time.
8	Fuse Assemblies	House fuses that protect control circuit.

BLOWER AND/OR BLOWER MOTOR (UP TO S/N GAS: 481929306 ELECTRIC: 481929289)



⚠ WARNING

Disconnect the electrical power to the machine and follow lockout / tagout procedures.

1. Remove racks and the right rack support.
2. Remove baffle panel by lifting up and out.
3. For gas ovens only, remove HEAT EXCHANGER (GAS OVENS).

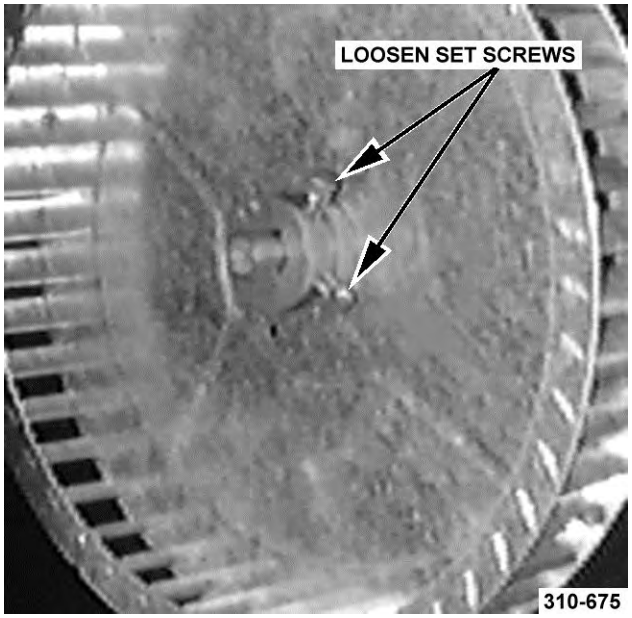

Fig. 9

4. Loosen set screws on blower hub.

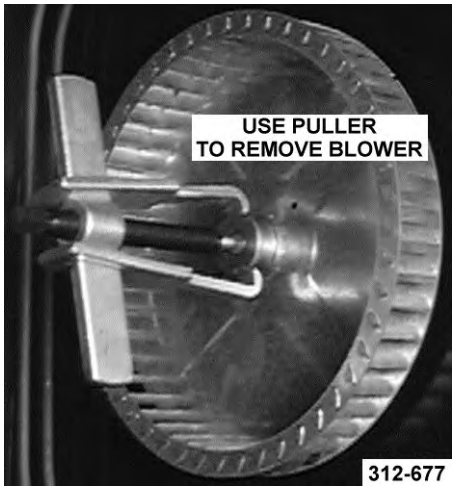

Fig. 10

5. Remove blower from motor shaft.

NOTE: Bearing puller may be necessary.

If the blower only is to be replaced, reverse procedure to install and perform BLOWER ADJUSTMENT (UP TO S/N GAS: 481929306 ELECTRIC: 481929289).

6. Remove RIGHT SIDE PANEL.
7. Note and disconnect motor wires.
   A. P1 (purple) to wire # 11.
   B. Orange (low speed) to wire # 12.
   C. Blue (high speed) to wire # 13.
   D. Red wires connected together.
8. Remove motor mounting bolts securing motor to mounting plate and remove from oven.

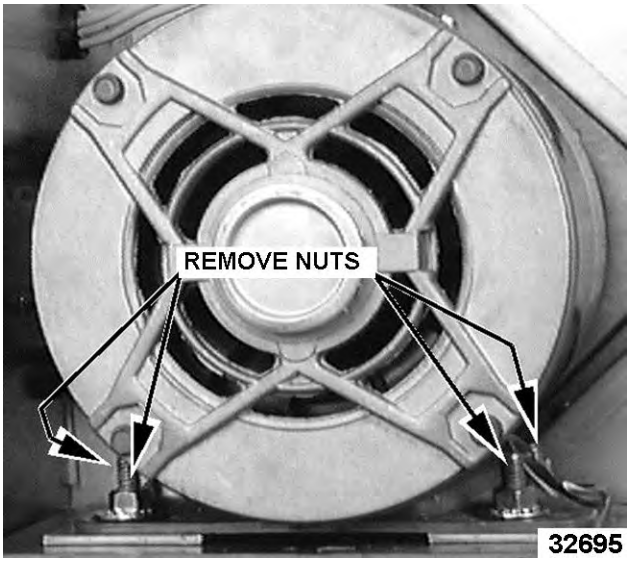

Fig. 11

9. Place new motor on mounting plage and route wiring through grommet in component panel.
10. Install mounting pads and bolts. DO NOT tighten mounting bolts.
11. Slide blower onto motor shaft until hub is flush with end of shaft and tighten set screws .
12. Adjust motor position until blower is parallel to oven cavity wall with a 1/4" spacing. Refer to: BLOWER ADJUSTMENT (UP TO S/N GAS: 481929306 ELECTRIC: 481929289).
13. Tighten bolts.
14. Install baffle panel, rack guides and racks.
15. Verify proper oven operation.

BLOWER AND/OR BLOWER MOTOR (AFTER S/N GAS: 481929307 ELECTRIC: 481929290)



⚠ WARNING

Disconnect the electrical power to the machine and follow lockout / tagout procedures.

1. Remove racks and the right rack support.
2. Remove baffle panel by lifting up and out.
3. For gas ovens only, remove HEAT EXCHANGER.

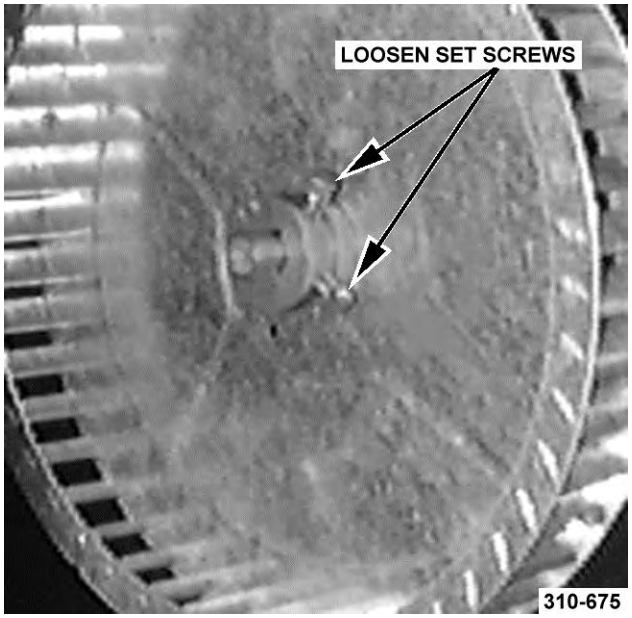

Fig. 12

4. Loosen set screws on blower hub.

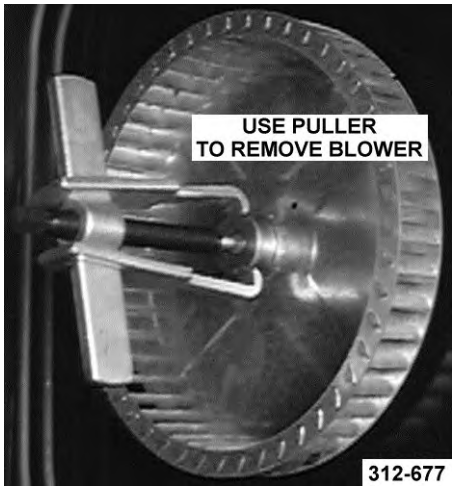

Fig. 13

5. Remove blower from motor shaft.

NOTE: Bearing puller may be nesscessary.

If the blower only is to be replaced, reverse procedure to install and perform BLOWER ADJUSTMENT (UP TO S/N GAS: 481929306 ELECTRIC: 481929289).

6. Remove RIGHT SIDE PANEL.
7. Note and disconnect motor wire connector.
8. Remove four nuts that secure motor to oven.

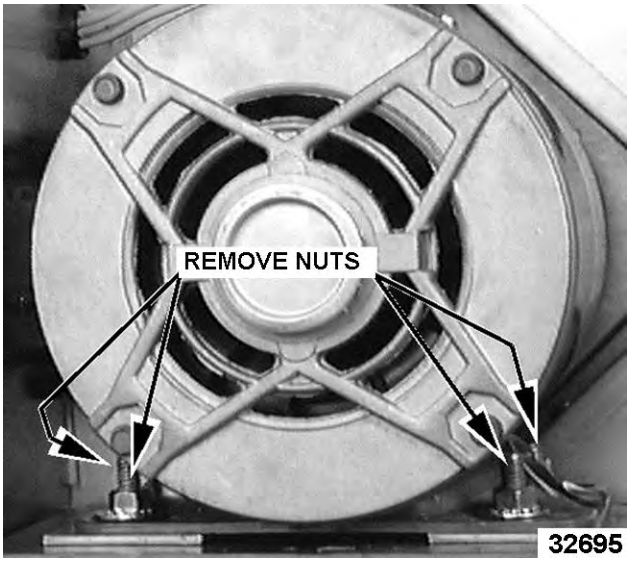

Fig. 14

9. Place new motor on studs and install nuts.
10. Install mounting pads and bolts. DO NOT tighten mounting bolts.
11. Install blower with 1/4" spacing. Refer to BLOWER ADJUSTMENT (UP TO S/N GAS: 481929306 ELECTRIC: 481929289).
12. Tighten bolts.
13. Install baffle panel, rack guides and racks.

HEAT EXCHANGER (GAS OVENS)



⚠ WARNING

Disconnect the electrical power to the machine and follow lockout / tagout procedures.



⚠ WARNING

Shut off the gas before servicing the unit and follow lockout / tagout procedures.

1. Remove racks and right rack support.
2. Remove baffle panel by lifting up and out.
3. Remove heat exchanger mounting screws and remove from oven.

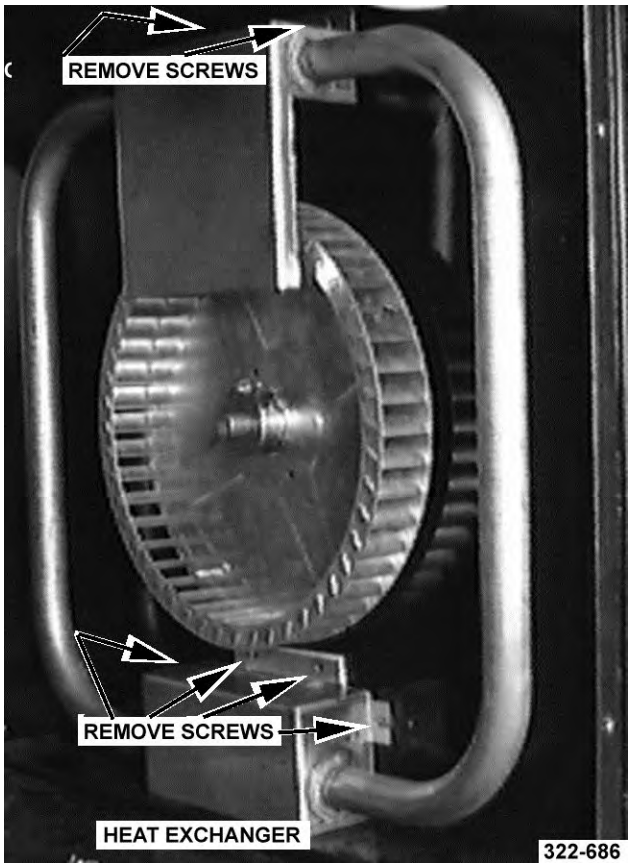

Fig. 15

4. Reverse procedure to install.
5. Verify proper oven operation.

BURNER (GAS OVENS UP TO S/N GAS: 481929306)



⚠ WARNING

Disconnect the electrical power to the machine and follow lockout / tagout procedures.



⚠ WARNING

Shut off the gas before servicing the unit and follow lockout / tagout procedures.

1. Remove racks and the right rack support.
2. Remove baffle panel by lifting up and out.
3. Remove RIGHT SIDE PANEL.
4. Remove CONTROL PANEL.
5. Remove HEAT EXCHANGER.
6. Remove BLOWER AND/OR BLOWER MOTOR (UP TO S/N GAS: 481929306 ELECTRIC: 481929289).
7. Remove motor mount cover (1, Fig. 16).

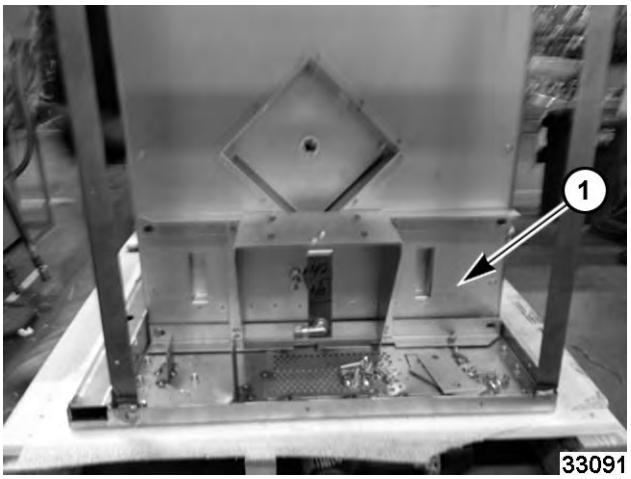

Fig. 16

8. Remove inner right hand side inside (1, Fig. 17) and outer (2, Fig. 17) mounting screws.

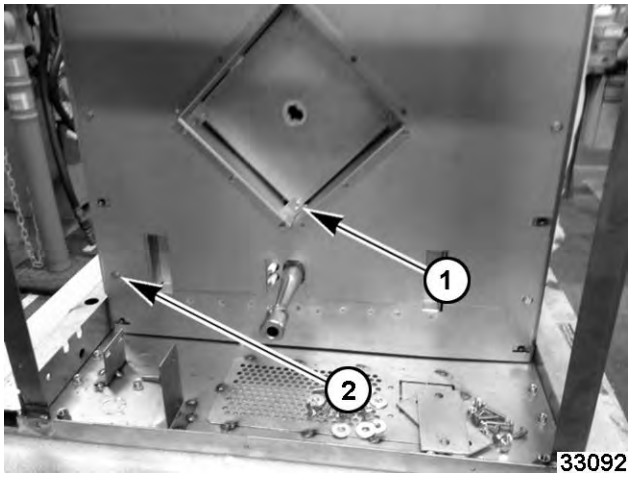

Fig. 17

9. Remove inner right side.

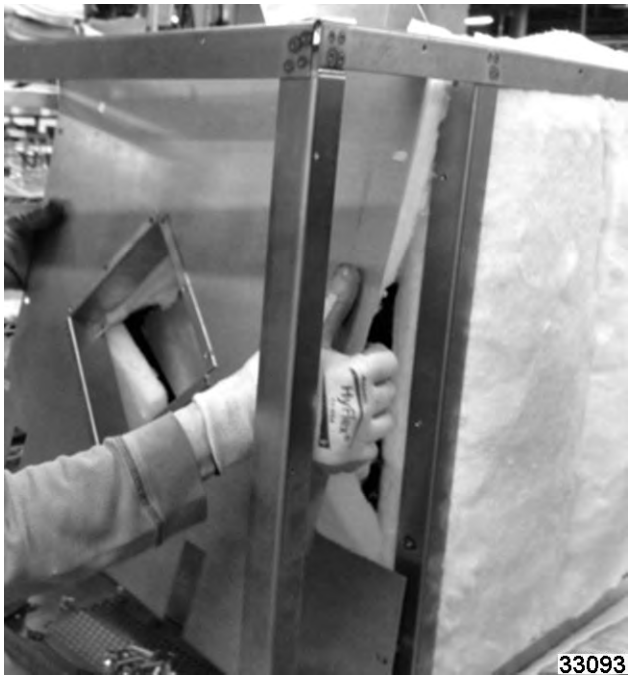

Fig. 18

10. Remove burner.

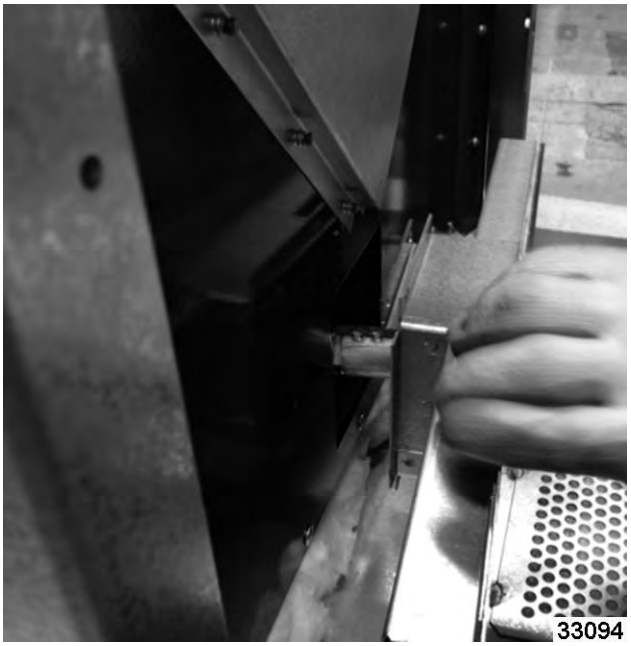

Fig. 19

11. Reverse procedure to install.

NOTE: When installed, the electrodes are positioned toward the front of the oven.

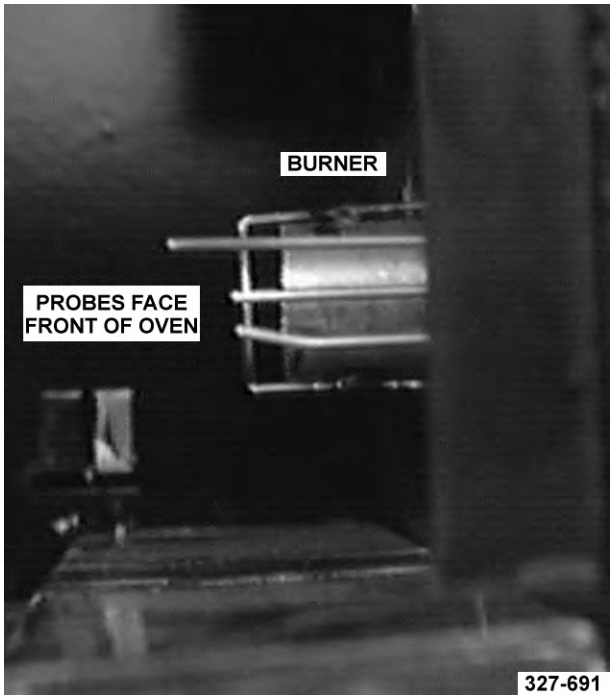

Fig. 20

12. Verify proper oven operation.

BURNER (AFTER S/N GAS: 481929307)



⚠ WARNING

Shut off the gas before servicing the unit and follow lockout / tagout procedures.



⚠ WARNING

Disconnect the electrical power to the machine and follow lockout / tagout procedures.

1. Remove RIGHT SIDE PANEL.
2. Remove nut holding orifice assembly (1, Fig. 21).

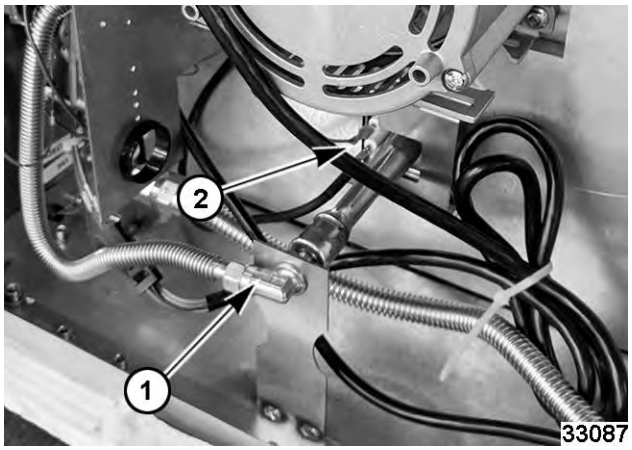

Fig. 21

3. Disconnect lead wires to electrode assembly (2, Fig. 21).
4. Remove burner assembly (1, Fig. 22) mounting screws.

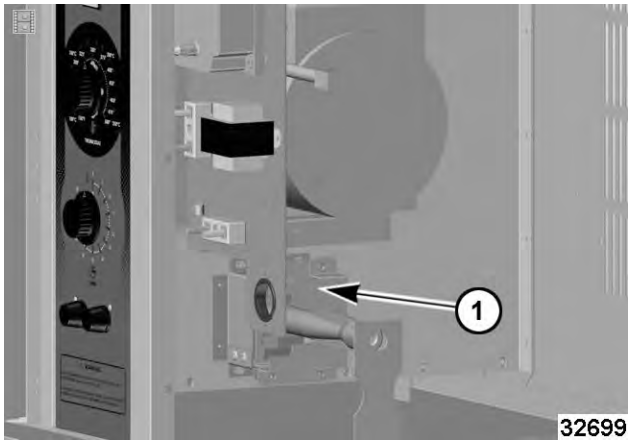

Fig. 22

5. Pull burner assembly out.
6. Remove ignitor.
7. Reverse procedure to install.
8. Verify proper oven operation.

GAS VALVE (SOLENOID) (GAS OVENS)



⚠ WARNING

Disconnect the electrical power to the machine and follow lockout / tagout procedures.



⚠ WARNING

Shut off the gas before servicing the unit and follow lockout / tagout procedures.

⚠ WARNING

All gas joints disturbed during servicing must be checked for leaks. Check with a soap and water solution (bubbles). Do not use an open flame.

1. Remove Right Side Panel.
2. Disconnect the lead wires at the gas valve.
3. Disconnect the gas line fitting going to the burner at the top of the gas valve.
4. Remove the gas valve from the nipple between the it and the manual gas valve.

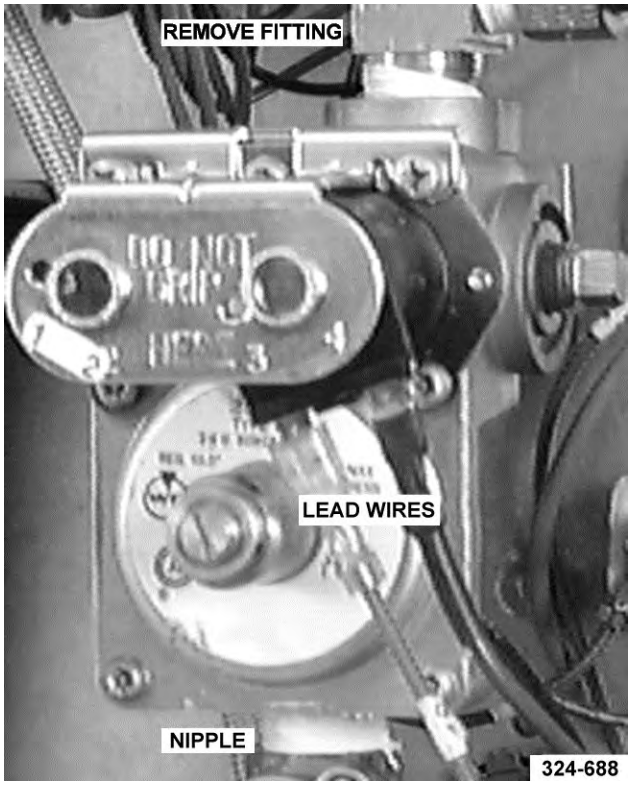

Fig. 23

5. Reverse procedure to install.
6. Adjust the gas valve as outlined under GAS PRESSURE ADJUSTMENT.

HEATING ELEMENTS (ELECTRIC OVENS)



⚠ WARNING

Disconnect the electrical power to the machine and follow lockout / tagout procedures.

1. Remove racks and the right rack support.
2. Remove baffle panel by lifting up and out.
3. Remove the Right Side Panel as outlined under “COVERS AND PANELS”.
4. Disconnect the lead wires to the heating elements.
5. Remove the screws from the clamps that secure the heating element assembly.

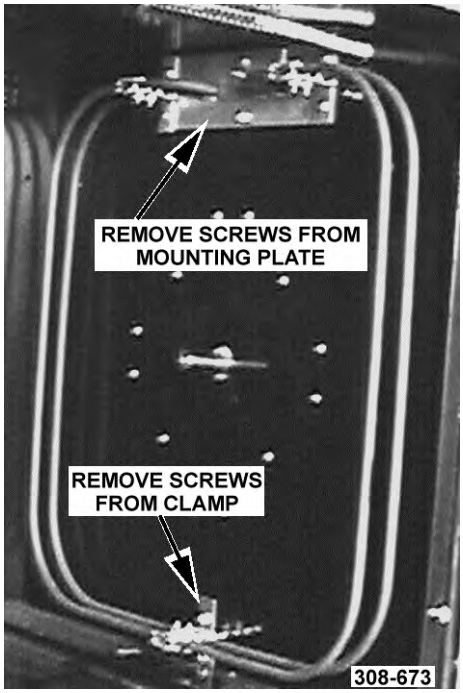

Fig. 24

6. Pull the top of the heating element assembly into the oven cavity until the ends of the elements are inside the oven cavity. Lift up and remove the lower clamp from between the side wall and the bottom of the oven cavity.
7. Remove the clamps from the heating element assembly and replace the element(s).
8. Reverse procedure to install.

TEMPERATURE PROBE



⚠ WARNING

Disconnect the electrical power to the machine and follow lockout / tagout procedures.

1. Remove the Control Panel as outlined under "COVERS AND PANELS".
2. Disconnect the probe leads at the temperature control.
3. Remove probe from the probe guard and push it thru the oven wall into the control panel area.

NOTE: When installing, only the metal surface of the probe should be inserted into the probe guard.

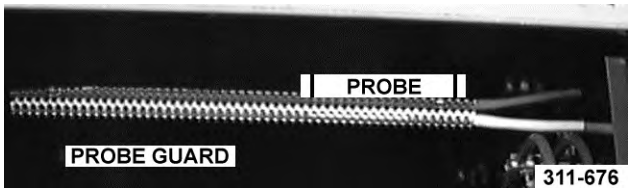

Fig. 25

NOTE: The probe may have to be inserted at an angle. The hole in the inside oven cavity wall may not line up straight with the oven cavity outer shell.

4. Reverse the procedure to install the new probe.
5. Adjust the temperature control as outlined under SOLID STATE CONTROL CALIBRATION or ELECTRONIC CONTROL in "SERVICE PROCEDURES AND ADJUSTMENTS".

OVEN DOOR (UP TO S/N GAS: 481929306 ELECTRIC: 481929289)



⚠ WARNING

Disconnect the electrical power to the machine and follow lockout / tagout procedures.

Removal

1. Remove TOP FRONT COVER.
2. Remove door switch lever from door shaft.
3. Remove door switch bracket.

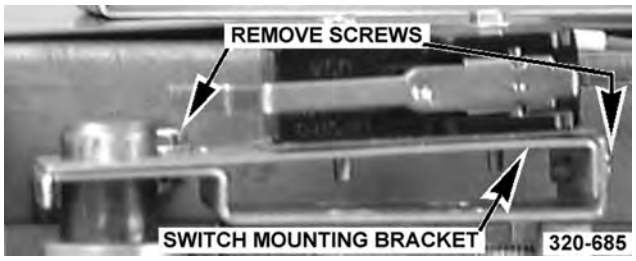

Fig. 26

4. While supporting the door, remove bearing, door plate and spacer.

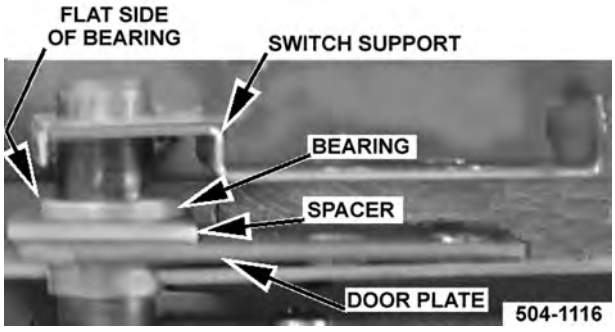

Fig. 27

5. Lift door from the lower bearing.
6. Reverse procedure to install door assembly and check DOOR ADJUSTMENT (UP TO S/N GAS: 481929306 ELECTRIC: 481929289).

Disassembly

1. Open door.
2. Remove door handle and latch plate.
3. Remove screws which secure the inner and outer door panels to door frame.

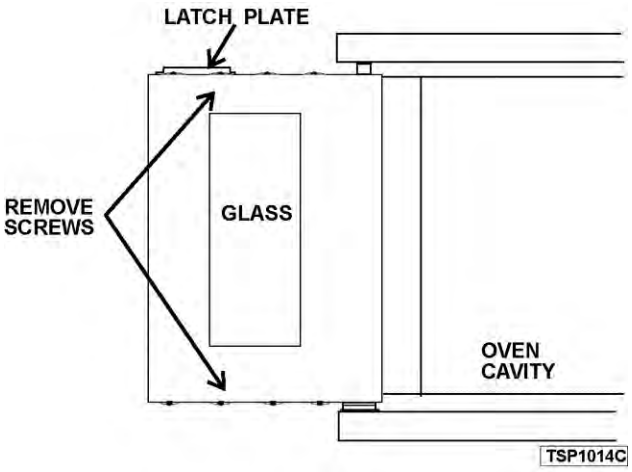

Fig. 28

4. Remove inner and outer door panel.
5. Remove four screws and lift window assembly out.

NOTE: Use high temperature silicone between the window and the door panel.

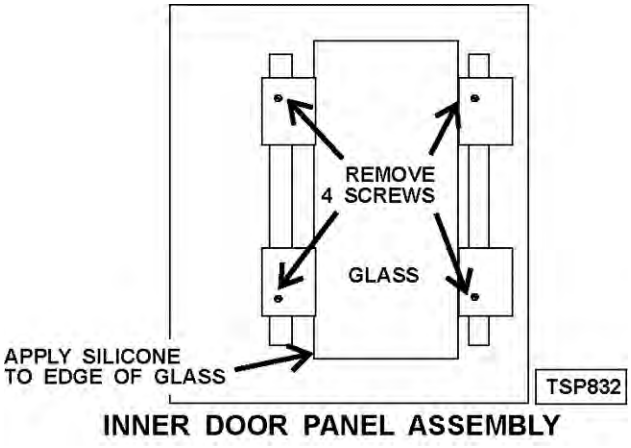

Fig. 29

6. Reverse procedure to install the new window and perform DOOR ADJUSTMENT (UP TO S/N GAS: 481929306 ELECTRIC: 481929289).

OVEN DOOR (AFTER S/N GAS: 481929307 ELECTRIC: 481929290)



⚠ WARNING

Disconnect the electrical power to the machine and follow lockout / tagout procedures.

1. Remove Top Front Cover and BOTTOM COVER.
2. Remove door switch lever arm from door shaft.

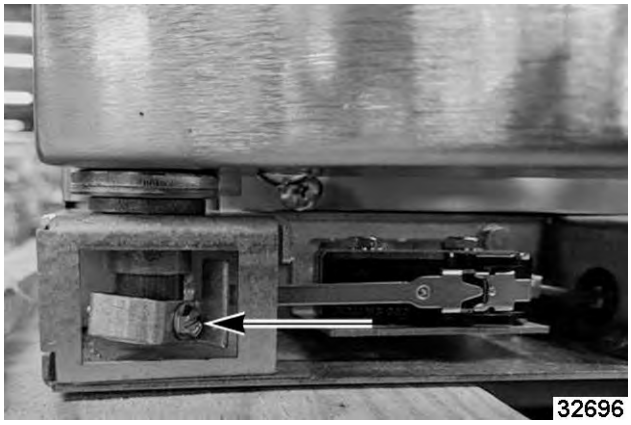

Fig. 30

3. With door closed, support door while carefully removing upper door support mounting screws.

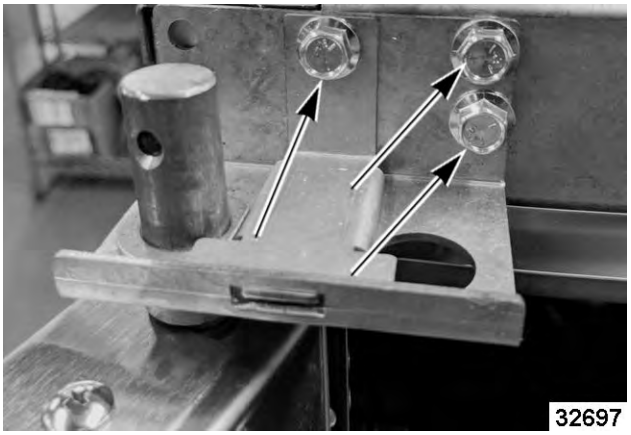

Fig. 31

4. Slide upper door support bracket off door shaft.
5. Lift door out of lower door support.
6. Reverse procedure to install.

DOOR CHAIN ADJUSTMENT (SIMULATANEOUS DOORS)

Introduction

When the oven doors are in proper adjustment, as the doors come together, the right door will lead the left door in closing by about 1/4 inch. The doors will feel like they are self closing the last 1/2 inch of travel.

Procedure

1. Remove the lower sill cover.
2. Close doors and check door chain for factory setting.
   - A. Turnbuckles should be 5 to 5 1/2 inches apart.
   - B. Short eye bolt should be connected to the end of the chain that goes to the front of the sprocket.
   - C. 2 links of the chain should not be engaged at the rear of the sprocket.
   - D. Chain must be tight enough that the doors move simultaneously when opened or closed.
   - E. When the doors are opened, the turnbuckles will move away from each other.
   - F. The stop cable must be positioned where it moves freely and does not get pinched.
3. Position door chain assembly to factory setting if the conditions in step 2 are not met.

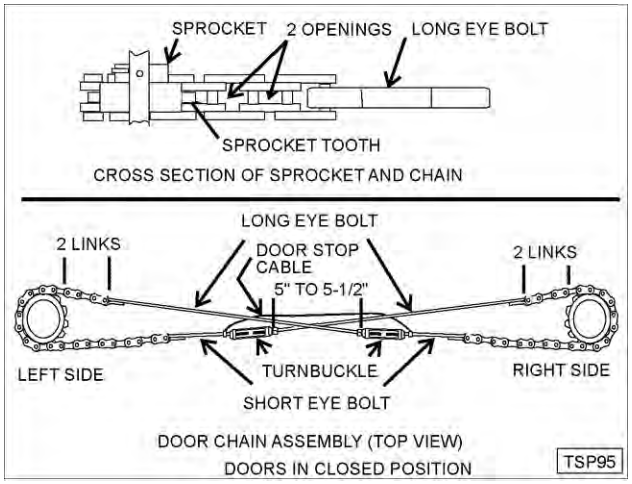

Fig. 32

4. If right door does not lead the left door in closing:
   A. Loosen locknuts on both turnbuckles.
   B. Loosen left turnbuckle.
   C. Tighten right turnbuckle.
   D. Tighten locknuts on both turnbuckles.
5. If the right door leads the left door by more than 3/8 inch:
   A. Loosen locknuts on both turnbuckles.
   B. Loosen right turnbuckle.
   C. Tighten left turnbuckle.
   D. Tighten locknuts on both turnbuckles.
6. Check door for proper operation.

NOTE: The locknuts must be tight during testing or the adjustment will not hold.

   A. If doors do not close properly, repeat step 4, 5 and 6.
   B. If doors operate properly, continue to step 7.

7. Install the lower front cover.

DOOR SWITCH (UP TO S/N GAS: 481929306 ELECTRIC: 481929289)



⚠ WARNING

Disconnect the electrical power to the machine and follow lockout / tagout procedures.

1. Remove TOP FRONT COVER.
2. Disconnect the leads to door switch.
3. Remove switch mounting screws.
4. Remove switch which is secured by two screws.

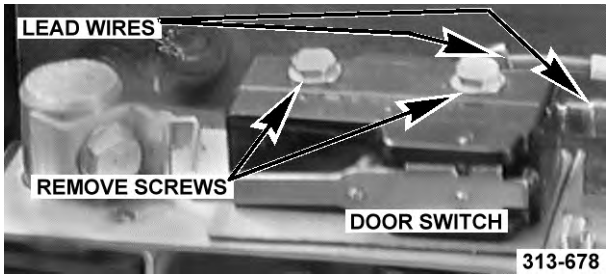

Fig. 33

5. Reverse the procedure to install.
6. Perform DOOR SWITCH ADJUSTMENT.

DOOR SWITCH (AFTER S/N GAS: 481929307 ELECTRIC: 481929290)



⚠ WARNING

Disconnect the electrical power to the machine and follow lockout / tagout procedures.

1. Remove TOP FRONT COVER and BOTTOM FRONT COVER.
2. Disconnect leads (1, Fig. 34) to door switch.

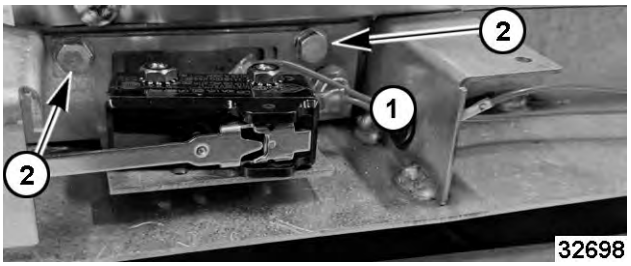

Fig. 34

3. Remove door switch bracket mounting screws (2, Fig. 34).
4. Reverse the procedure to install new switch.
5. Perform DOOR SWITCH ADJUSTMENT (AFTER S/N GAS: 481929307 ELECTRIC: 481929290).
6. Verify proper oven operation.

SERVICE PROCEDURES AND ADJUSTMENTS

TEMPERATURE PROBE TEST (ALL MODELS)



⚠ WARNING

Certain procedures in this section require electrical test or measurements while power is applied to the machine. Exercise extreme caution at all times and follow Arc Flash procedures. If test points are not easily accessible, disconnect power and follow Lockout/Tagout procedures, attach test equipment and reapply power to test.



⚠ WARNING

Disconnect the electrical power to the machine and follow lockout / tagout procedures.

1. Remove the Right Side Panel as outlined under "COVERS AND PANELS".
2. Remove the probe lead wires from the electronic control.
3. Test the probe with an ohmmeter.

TEMPERATURE in °F	RESISTANCE in Ω ±10%
77	90000
240	4077
260	3016
280	3266
300	1726
320	1332
340	1041
360	822
380	656
400	529
425	424
450	334
475	266

VERIFICATION OF SPARK AT SPARK PROBE



⚠ WARNING

Disconnect the electrical power to the machine and follow lockout / tagout procedures.



⚠ WARNING

Shut off the gas before servicing the unit and follow lockout / tagout procedures.

1. Remove the Right Side Panel and Control Panel as outlined under “COVERS AND PANELS”.
2. Disconnect the high voltage lead from the electrode.

⚠ WARNING

DO NOT HOLD THE WIRE WITH YOUR HANDS FOR THIS TEST. THE MANUAL GAS VALVE MUST BE CLOSED

3. Clamp the wire in such a manner that the end of the wire is 3/16" from the frame of the oven.

NOTE: It is critical that the wire be held 3/16" away from the oven or sparking may not occur even though the probe circuits are functioning properly.

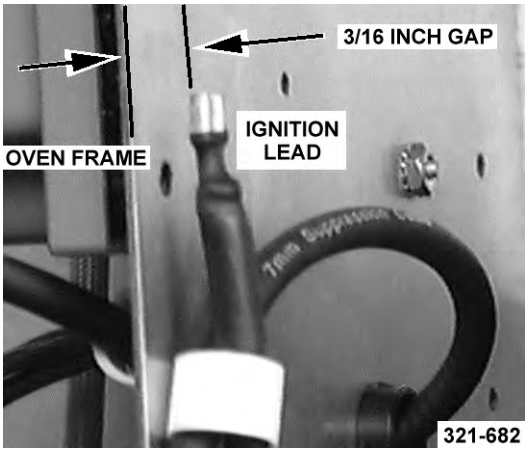

Fig. 35

⚠ WARNING

THE FOLLOWING STEPS REQUIRE POWER TO BE APPLIED TO THE UNIT DURING THE TEST. USE EXTREME CAUTION AT ALL TIMES.

4. Plug the unit in and set the temperature controller to the maximum setting.
5. Turn the power switch on.
6. Sparking should occur after a 15 second purge time. Arcing from the lead wire to the oven frame should be observed at this time.

GAS PRESSURE ADJUSTMENT



⚠ WARNING

Disconnect the electrical power to the machine and follow lockout / tagout procedures.



⚠ WARNING

Shut off the gas before servicing the unit and follow lockout / tagout procedures.

1. Remove the Right Side Panel and Control Panel as outlined under “COVERS AND PANELS”.
2. Remove the plug from the test port and install the manometer.

⚠ WARNING

THE FOLLOWING STEPS REQUIRE POWER TO BE APPLIED TO THE UNIT DURING THE TEST. USE EXTREME CAUTION AT ALL TIMES.

3. Plug in the unit and turn on the gas.
4. Set the temperature control to the highest setting and turn the power switch on. The burner must be lit while adjusting the pressure.
5. Turn the adjustment screw to obtain the proper gas pressure.

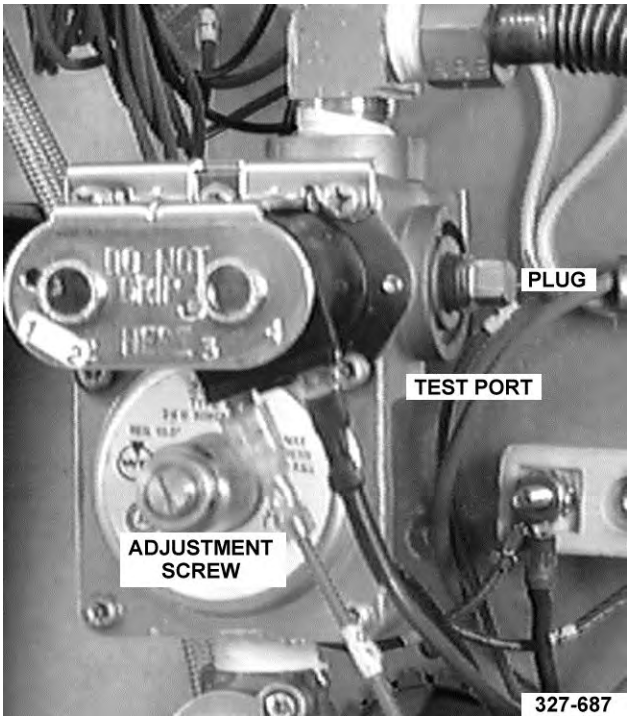

Fig. 36

- Turn screw clockwise to increase pressure.
- Turn screw counterclockwise to decrease pressure.

GAS TYPE	SETTING AT OUTPUT OF GAS VALVE
Natural	3.5 inches W.C.
Propane	10 inches W.C.

NOTE: If input pressure is below 4.0 (Natural) or 10.5 (Propane) inches W.C., the desired output cannot be obtained and the oven will overate at a lower BTU.

SPARK IGNITION CONTROL TEST



⚠ WARNING

Disconnect the electrical power to the machine and follow lockout / tagout procedures.

NOTE: Verify that the ground terminal is connected to the oven ground.

No gas ignition & no sparking

1. Remove the Right Side Panel as outlined under “COVERS AND PANELS”.
2. Plug in the unit and set the temperature controller to 350°.
3. Turn the power switch on.

4. Check for 24 VAC between the power terminal and ground terminal.
   A. If 24 VAC is present, replace the spark ignition control.
   B. If 24 VAC is not present, check the transformer, temperature controller, and switches.

No gas ignition & no sparking

1. Remove the Right Side Panel as outlined under "COVERS AND PANELS".
2. Plug in the unit and set the temperature controller to 350°.
3. Turn the power switch on.
4. Check for 24 VAC between the power terminal and ground terminal. The voltage should be present after the 15 second purge and during the 10 second ignition period.
   A. If 24 VAC is present, replace the spark ignition control.
   B. If 24 VAC is not present, check the transformer, temperature controller, and switches.

SOLID STATE CONTROL TEST



⚠ WARNING

Certain procedures in this section require electrical test or measurements while power is applied to the machine. Exercise extreme caution at all times and follow Arc Flash procedures. If test points are not easily accessible, disconnect power and follow Lockout/Tagout procedures, attach test equipment and reapply power to test.

1. Remove the Right Side Panel.

NOTE: If right side panel is not accessible, this component can be serviced by removing Control Panel.

2. Place a thermocouple in the geometric center of the oven cavity.

NOTE: Oven temperature must be below 450°F.

NOTE: If oven is equipped with "Cook and Hold" option, set to Cook (normal cooking) before continuing.

3. Set the temperature control to the maximum setting.
4. Check machine data plate for correct voltage to oven. Refer to diagram below for proper terminal locations and voltages before checking the control. Use the correct terminals for the corresponding voltage.
5. Turn the power switch to ON.

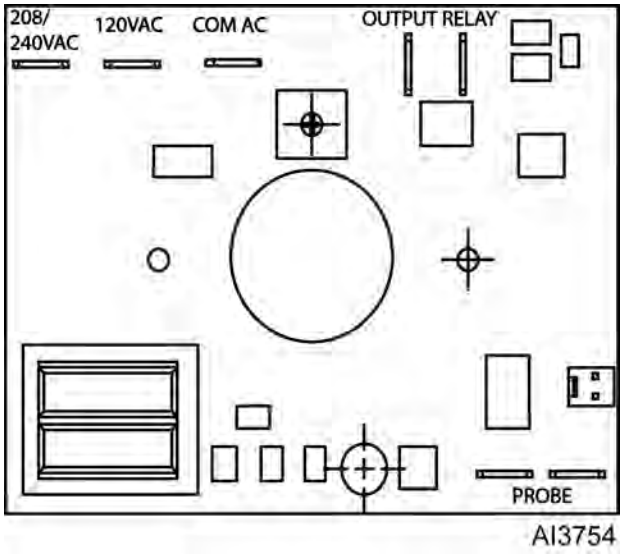

Fig. 37

6. Check for proper voltage across terminals COM AC to 120VAC or COM AC to 208-240VAC for power to the control.
   A. If correct, proceed to step 7.
   B. If incorrect, problem is **not** with the temperature control. See ELECTRIC OVENS.
7. Check relay voltages on the board:
   A. For 120VAC controls - check across OUTPUT RELAY terminal (left side) to 120 VAC terminal for input to the internal relay. Check across OUTPUT RELAY terminal (right side) to 120 VAC for output from the internal relay.
   B. For 208-240VAC controls - check across OUTPUT RELAY terminal (left side) to 208-240 VAC terminal for input to the internal relay. Check across OUTPUT RELAY terminal (right side) to 208-240 VAC for output from the internal relay.

1) If input voltage to the internal relay is correct, proceed to step 8. If input voltage to the internal relay is not present, problem is not with the temperature control. See ELECTRIC OVENS.

2) If output voltage from the internal relay is correct proceed to step 8. If output voltage from the internal relay is not correct, check temperature probe as outlined under TEMPERATURE PROBE TEST (ALL MODELS).

8. Set the temperature control to the minimum setting.

NOTE: Oven temperature **must** be above 300°F.

9. Check for zero (0) volts AC across terminals OUTPUT RELAY terminal (right side) to 120 VAC or OUTPUT RELAY terminal (right side) to 208-240 VAC for no output from the internal relay.

   A. If correct, temperature control is functioning properly.

   B. If incorrect, check temperature probe as outlined under TEMPERATURE PROBE TEST (ALL MODELS).

      1) If temperature probe is OK:

         a. Turn the power switch OFF.



⚠ WARNING

Disconnect the electrical power to the machine and follow lockout / tagout procedures.

         b. Replace the temperature control and check calibration as outlined underSOLID STATE CONTROL CALIBRATION.

SOLID STATE CONTROL CALIBRATION

1. Place a thermocouple in the geometric center of the oven cavity.
2. Set the On-Off-Cool Down switch to ON.
3. Set the temperature control to 350 degrees F.
4. Allow the oven to cycle until the oven temperature stabilizes. (cycle at least three times)
5. Record the temperature at which the HEAT LIGHT goes off and on.

   A. Check for at least two complete heating cycles.

6. Calculate the differential by subtracting the temperature indicated when the heat light comes on from the temperature indicated when the heat light goes out.

   Differential = Heat light OFF - Heat light ON.

   Example: 360 (light out) - 340 (light on) = 20° F differential.

   A. The differential calculated should be less than 20 degrees F.

      1) If the differential is more than 20 degrees F, check temperature probe and temperature control board as out lined under "TEMPERATURE PROBE TEST (ALL MODELS)" and "SOLID STATE CONTROL TEST".

7. Calculate the average temperature by adding the temperature indicated when the heat light goes out to the temperature indicated when the heat light comes on and dividing this answer by 2.

   [Temp.(light off)+ Temp.(light on)] ÷ 2 = Average Temperature

   Example: $\frac{360 + 340}{2} = \frac{700}{2}$ 350°F average temperature

8. If the average temperature differs more than 10 degrees F from the dial settings:

   A. Pencil mark the knob pointer position as a reference point on the control panel next to the dial plate.

   B. Remove the temperature control knob.



Fig. 38

C. Loosen the two dial plate mounting screws and the temperature control mounting nut. Loosen only enough to turn the dial plate.

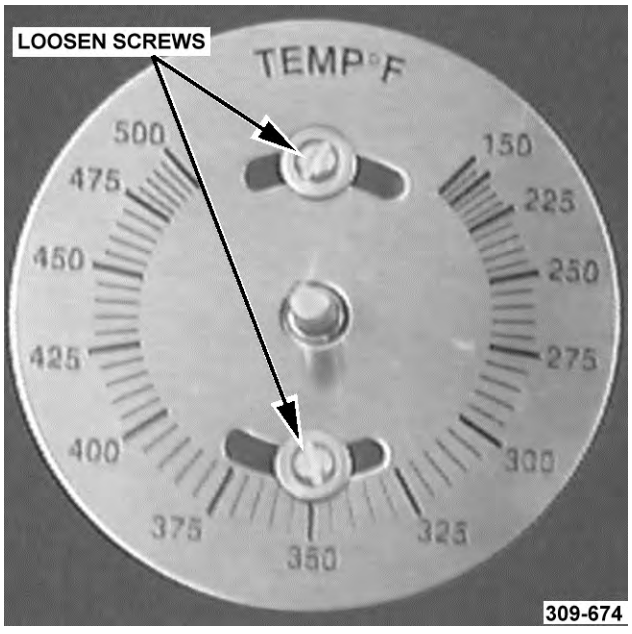

Fig. 39

D. Rotate the dial plate until the temperature calculated in Step 7 is in line with the pencil mark.

E. If the above adjustment cannot be obtained, check temperature probe and temperature control board as outlined under "TESTING TEMPERATURE CONTROL BOARD".

DOOR SWITCH ADJUSTMENT (UP TO S/N GAS: 481929306 ELECTRIC: 481929289)



⚠ WARNING

Disconnect the electrical power to the machine and follow lockout / tagout procedures.

1. Remove Top Front Cover.

NOTE: The door switch actuator should be operated by the switch lever when the door is about ½" from being closed.

2. Make adjustment if necessary.

Adjustment

A. Loosen the two switch mounting screws.

B. Adjust the switch bracket to obtain the correct setting as outlined in step 2.

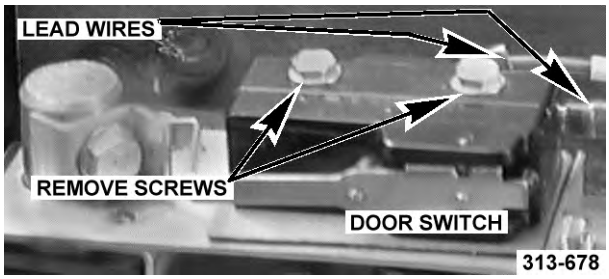

Fig. 40

C. Tighten the two switch bracket mounting screws.

D. If the adjustment can not be obtained by moving the switch, you can bend the tab of actuator lever.

3. Install Top Front Cover.

DOOR SWITCH ADJUSTMENT (AFTER S/N GAS: 481929307 ELECTRIC: 481929290)



⚠ WARNING

Disconnect the electrical power to the machine and follow lockout / tagout procedures.

1. Remove BOTTOM COVER.

NOTE: The door switch actuator should be operated by the switch lever when the door is about ½" from being closed.

2. Make adjustment if necessary.

   Adjustment

   A. Bend switch arm or acutator lever to adjust.



Fig. 41

3. Install BOTTOM COVER.
4. Verify proper operation of door.

DOOR REVERSAL



⚠ WARNING

Disconnect the electrical power to the machine and follow lockout / tagout procedures.

1. Remove the oven door.
   A. Remove the door strike plate from the top of the door.
   B. Rotate the door 180°. The top of the door is now the bottom.
   C. Install the door strike on the new top of the door. Use the screws removed to install the strike plate to fill the holes on the bottom of the door.
2. Remove the bottom door bushing and antirotation plate.
3. Remove the knockout from the lower sill cover.
4. Install the plug button in the old door bushing hole in the lower sill cover.
5. Install the bottom door bushing and anti-rotation plate.
6. Remove the catch assembly from the oven.
   A. Move the door catch to the opposite side of the door catch channel.
   B. Install the door catch assembly to the opposite side of the top sill.



Fig. 42

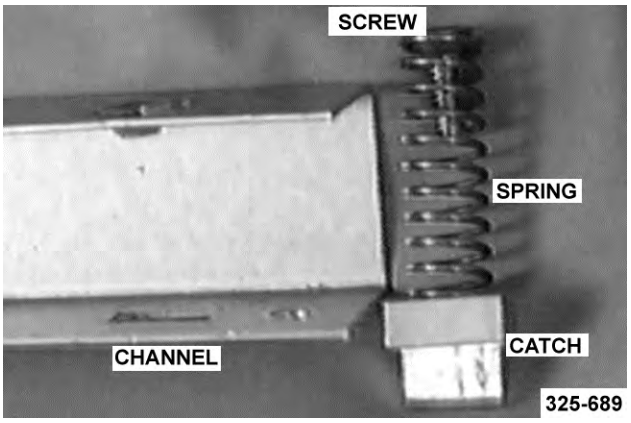

Fig. 43

7. Remove the door switch from the switch mounting bracket.
   A. Use the other set of holes in the mounting bracket to mount the switch.

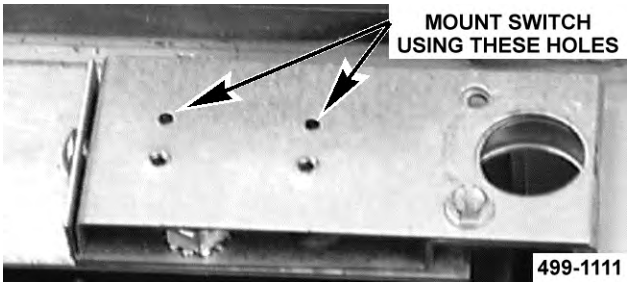

Fig. 44

   B. Place the switch insulation pad on the mounting bracket.

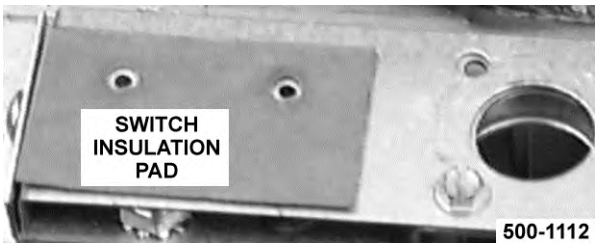

Fig. 45

   C. Install the switch onto the mounting bracket.

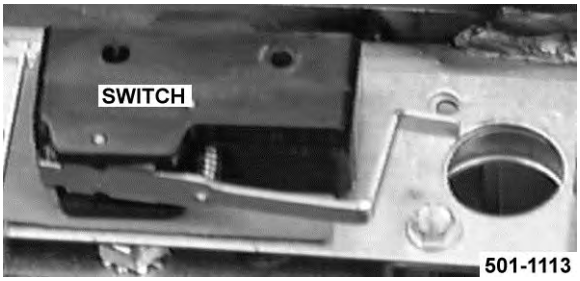

Fig. 46

8. Install the door in the lower door bushing.
9. Install the top door bushing and door switch mounting plate to the new position on the upper sill.
10. Adjust the door as outlined under "DOOR ADJUSTMENT (UP TO S/N GAS: 481929306 ELECTRIC: 481929289)".
11. Adjust the door switch as outlined under "DOOR SWITCH ADJUSTMENT (UP TO S/N GAS: 481929306 ELECTRIC: 481929289)".
12. Replace the top front cover and check the oven for proper operation.

DOOR ADJUSTMENT (UP TO S/N GAS: 481929306 ELECTRIC: 481929289)



⚠ WARNING

Disconnect the electrical power to the machine and follow lockout / tagout procedures.

1. The door should be parallel with the face of the oven cavity.

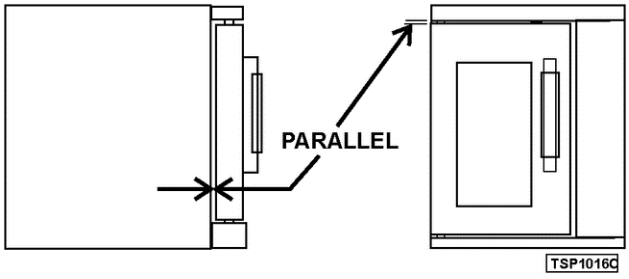

Fig. 47

2. If adjustment is needed:
   A. Remove the Top Front Cover as outlined under "COVERS AND PANELS" in "REMOVAL AND REPLACEMENT OF PARTS".
   B. Loosen the screws that secure the door support and move the door in the slot until it is parallel with the face of the oven cavity.
   C. Tighten the screws and install the top front cover.

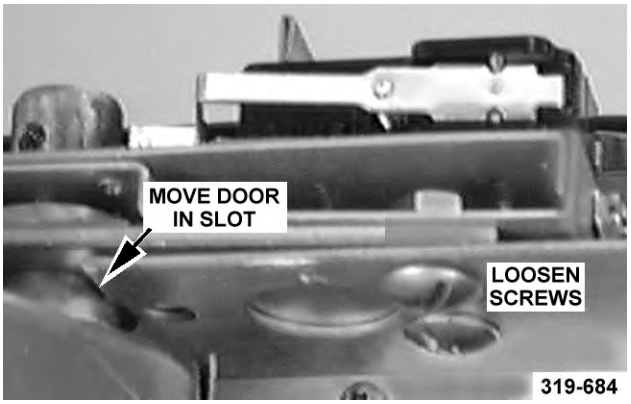

Fig. 48

DOOR ADJUSTMENT (AFTER S/N GAS: 481929307 ELECTRIC: 481929290)



⚠ WARNING

Disconnect the electrical power to the machine and follow lockout / tagout procedures.

1. Remove TOP FRONT COVER.
2. Loosen door mounting screws.

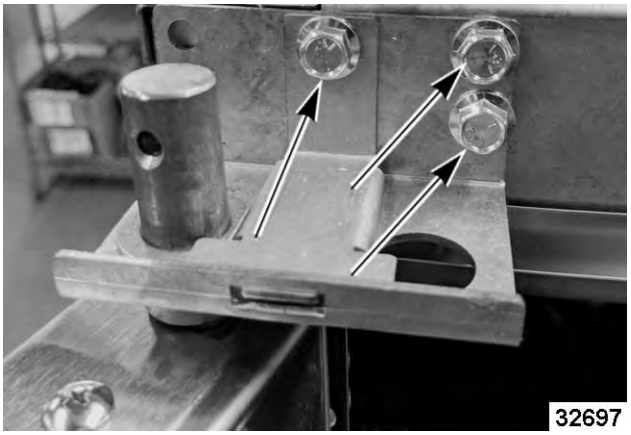

Fig. 49

3. Hold door to achieve parallel.
4. Tighten screws.

BLOWER ADJUSTMENT (UP TO S/N GAS: 481929306 ELECTRIC: 481929289)



⚠ WARNING

Disconnect the electrical power to the machine and follow lockout / tagout procedures.

1. Remove rack and rack supports.
2. Remove baffle panel by lifting up and out.
3. Check the blower. It should be ¼" away from and parallel to the oven wall. If not, proceed to step 4.
4. Remove the right side panel as outlined under "COVERS AND PANELS".
5. To adjust the blower at the sides (front and rear of oven cavity), loosen the motor mounting bolts and move the motor until the ¼" gap is obtained.
6. To adjust the blower at the top and bottom, place shims between the motor mounting bracket and the mounting base.

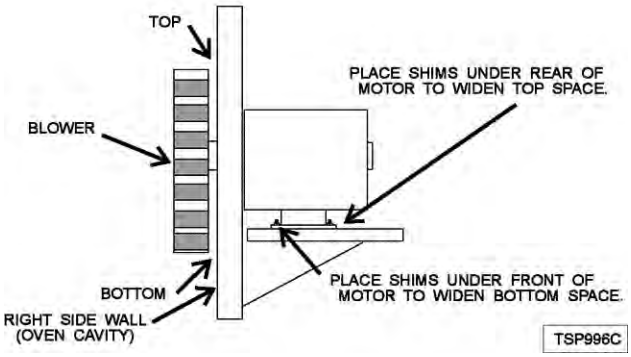

Fig. 50

7. Reverse the procedure to install.

BLOWER ADJUSTMENT (AFTER S/N GAS: 481929307 ELECTRIC: 481929290)



⚠ WARNING

Disconnect the electrical power to the machine and follow lockout / tagout procedures.

1. Remove rack and rack supports.
2. Remove baffle panel by lifting up and out.
3. Check the blower. It should be ¼" away from and parallel to the oven wall. If not, proceed to STEP 4.
4. Remove RIGHT SIDE PANEL.
5. Loosen blower mounting bolts.
6. Slide on motor shaft to get ¼" gap between blower and fan cover.
7. Tighten blower mounting bolts.
8. Reverse the procedure to install.

ELECTRONIC CONTROL

SPECIAL KEY FUNCTIONS - To activate these functions press the specified keys while turning the oven on. You can not toggle between functions. Each function has to be entered from the off position.

NOTE: There are four hidden keys on the control. See diagram TSP1008C following the table.

HOLD KEYS	1 & 3	4 & 9	6 & 8
FUNCTION	Calibration Mode	Change between °C & °F	Display test

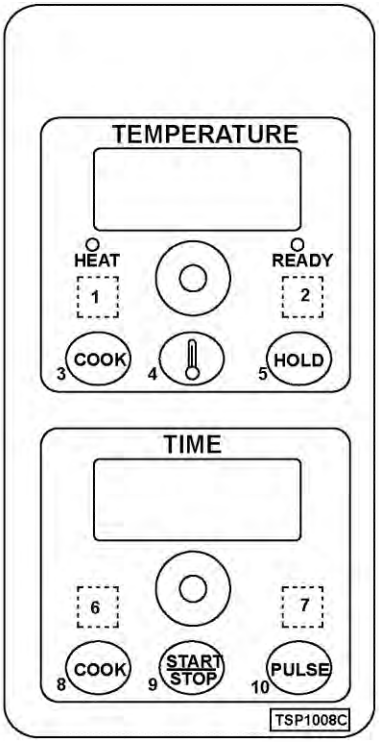

Fig. 51

CALIBRATE OVEN - Perform Calibration at 350°F

1. Place a thermocouple near the geometric center of the oven cavity.
2. Cycle oven until the cavity temperature stabilizes. (usually 3 cycles)
3. Turn the oven off.
4. Enter the calibration mode.
5. Compare the set temperature to the measured temperature.
6. Adjust the temperature on the display to match the measured temperature.
7. Press key 3 to store the calibration information.

DISPLAY TEST - The control will cycle through a continuous test until the oven is turned off. Each segment of the displays will be lit in sequence, each LED in order and then each digit will light.

ERROR CODES	
CODES	**CONDITIONS**
E-01	High Limit Error - Check open probe.
E-02	Low Limit Error - check for 6 VAC from transformer. Check control pins 1-2 for 12 VAC & pins 2-3.
E-03	Control compartment ambient temperature is above 215°F
E-04	Control compartment ambient temperature is below 32°F

HEATING ELEMENT TEST

Test each rod in the element assembly.

Values in the table are nominal (± 10%).

VOLTAGE	WATTAGE	AMPERAGE	RESISTANCE
208	2500	12	17.33
240	2500	10.4	23.1

ELECTRICAL OPERATION

COMPONENT FUNCTION

POWER SWITCH	Controls power to oven.
COOLDOWN SWITCH	Prevents heaters from operating and allows fan to run. (On some solid state control models, this switch is combined with the power switch)
FAN SPEED SWITCH	Controls speed of oven cavity blower motor. (Electric ovens)
SOLID STATE CONTROL	Controls oven temperature.
TIMER	Signals end of timed baking. Does not shut heater or burner off. (Solid state control)
ELECTRONIC CONTROL	Controls oven temperature, cook and hold mode, pulse mode and time.
BLOWER MOTOR	Circulates air inside oven cavity. (Contains centrifugal switch for gas ovens) (2 speed electric ovens)
DOOR SWITCH	Allows heating of oven, only when the doors are closed.
TEMPERATURE PROBE	Senses temperature of oven cavity for the solid state control and electronic control.
SOLID STATE RELAY	Controls power to blower motor. (Electronic Control)
TRANSFORMER	Provides 12 and 6 VAC power. (Electronic Control)
TRANSFORMER	Provides 24 VAC power to the spark ignition control if the centrifugal switch (part of blower motor) is closed. (Gas Ovens)
GAS VALVE	Allows gas to flow to burner. (Gas ovens)
SPARK MODULE	Generates spark for burner ignition, monitors flame, controls 15 second purge time and 10 second ignition time and power to gas valve. (Gas ovens)
POWER LIGHT	Lit whenever the power switch is ON. (Solid state control)
HEAT LIGHT	Lit whenever burner or heaters are operating. (Solid state control)
NO IGNITION LIGHT	Lit when sensor fails to detect flame. (Solid state control - Gas oven)
CONTACTOR	Powers heater elements. (Electric ovens)
FUSE	Protects control circuit. (Electric ovens)

COMPONENT LOCATION

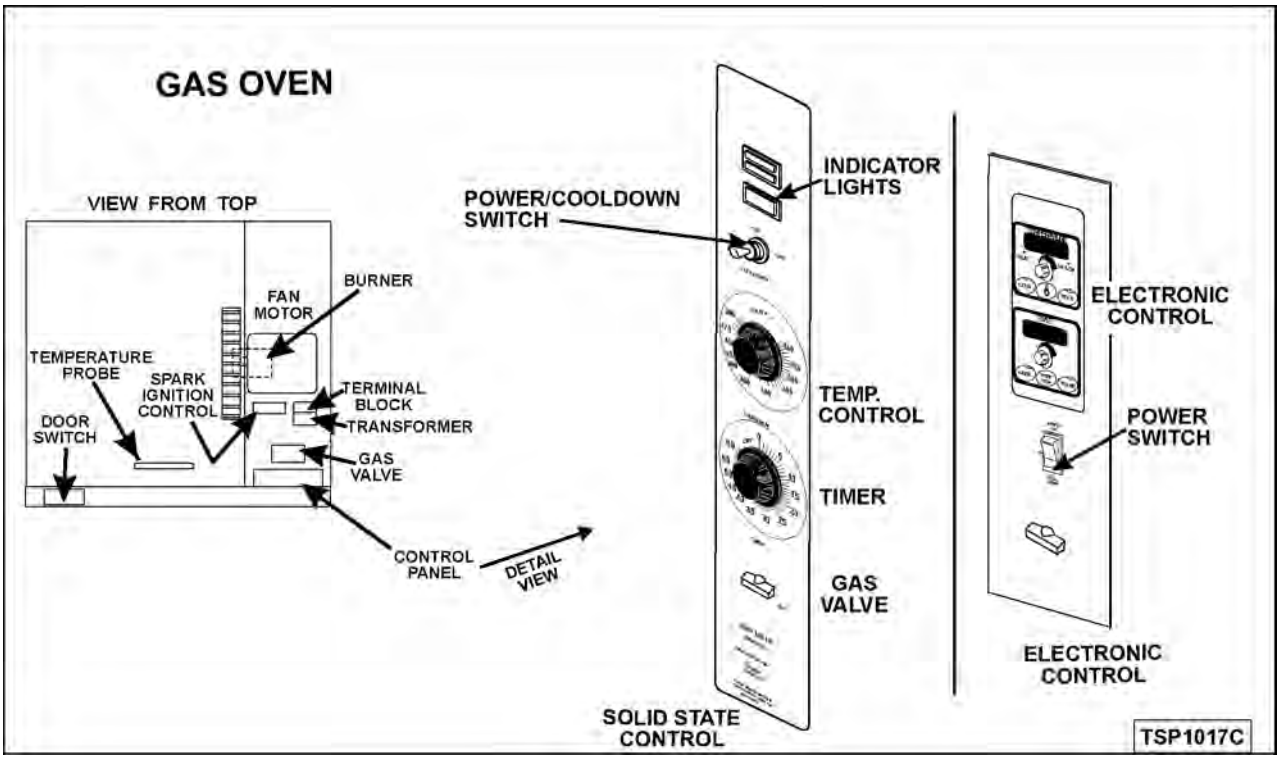

Fig. 52

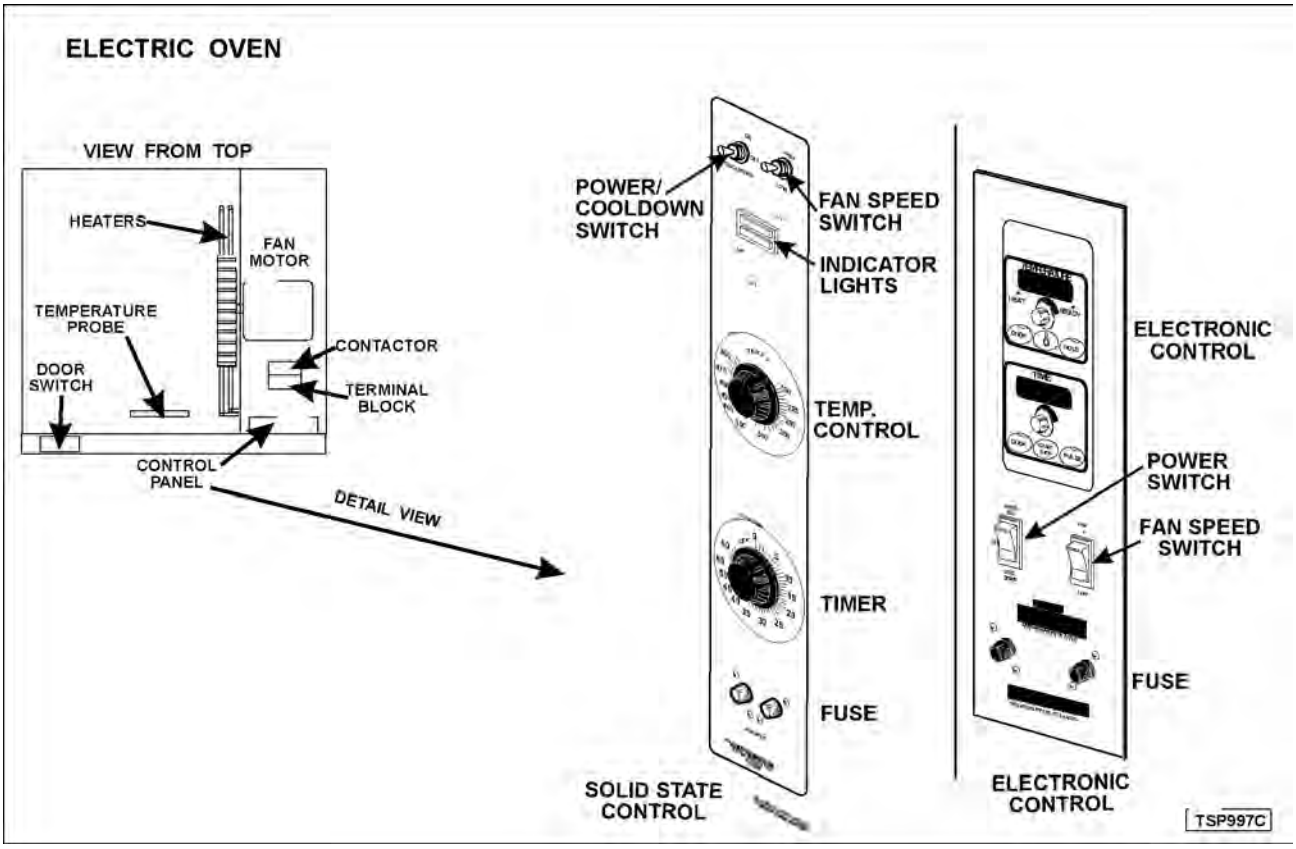

Fig. 53

SEQUENCE OF OPERATION - GAS OVEN

IGNITION MODULE

1. 24VAC supplied to ignition module as described under oven sequence of operation
   - A. 15 second prepurge period
     - 1) No-ignition light is on
     - 2) Cavity blower motor removes any residual gas from combustion chamber
   - B. 10 second spark period
     - 1) Gas valve energized
     - 2) No-ignition light is off
2. The flame is monitored by a DC voltage of at least 5 microamps passing from the ignitor probe through the flame to ground.
   - A. If the flame is detected before 10 seconds:
     - 1) Sparking is terminated
     - 2) Gas valve held open
     - 3) Monitoring of flame continues
   - B. If a flame is not established after the 10 second spark period
     - 1) A second 15 second prepurge period
     - 2) A second 10 second spark period
   - C. If a flame is not established after the second 10 second spark period
     - 1) A third 15 second prepurge period
     - 2) A third 10 second spark period
   - D. If a flame is not established after the third 10 second spark period, the module will go into lock out .
     - 1) No ignition light on
3. To reset the ignition module perform one of the following
   - A. Turn power switch off; then on
   - B. Open and close the door
   - C. Turn the temperature control all the way off then back to the set temperature
4. If a flame is established then is extinguished before the temperature control is satisfied, the no ignition light will be on and the ignition module will attempt to light the burner in the sequence described above.

Solid State Control

1. Conditions
   - A. Supply voltage to unit
     - 1) L1 to power/cooldown switch
     - 2) N (120V) or L2 (220V) to motor; ignition transformer; power light; heat light; temp control (pin 9); buzzer; timer motor
     - 3) Good chassis ground for the ignition system; no ignition light; gas valve; control module transformer
   - B. Power/cooldown switch off
   - C. Oven at room temperature D. Temperature control set to desired temperature
   - D. Manual gas valve open
   - E. Door switch closed
2. Power/cooldown switch turned "on"; L1 voltage to:
   - A. Power light
   - B. Control pin 8 and pin 7
   - C. Blower motor energized; thru power switch, door switch
   - D. Pin 1 of timer
   - E. Control calls for heat; contacts 6/7 closed
     - 1) Heat light
     - 2) Primary of 24 VAC ignition transformer
3. 24 VAC to contacts of blower motor centrifugal switch
4. As blower motor reaches operating speed, blower motor centrifugal switch closes A. 24 VAC to ignition module
5. Ignition module operates (see ignition module sequence of operation)
6. Temperature is satisfied and control contacts 6/7 open.
   - A. Heat light goes out.
   - B. Power removed from ignition transformer.
     - 1) Gas valve shuts off gas supply to burner.
7. Oven cycles on solid state control until power/ cooldown switch is moved from the "on" position or the door is opened.

NOTE: The blower motor and gas valve (solenoid) are de-energized when the door is opened while the oven is in the heat mode.

Electronic Control
Preheat

1. Conditions. A. Supply voltage to unit. 1) L1 (black 120V) to power/cooldown switch 2) N (120V) or L2 (220V) to motor; primary of ignition transformer; primary of control transformer 3) Good chassis ground for the ignition system; electronic control; gas valve; ignition module transformer B. Power/cooldown switch "off". C. Oven at room temperature. D. Door switch closed. E. Manual gas valve open.
2. Power/cooldown switch turned "on"; L1 voltage to: A. Primary of control transformer 1) 6 VAC - in at pin 3 of control 2) 12 VAC - in at pin 1 of control 3) Common - in at pin 2 of control B. Terminal 1 of solid state relay C. Pin 13 of control
3. Control set to desired temperature using set knob.
    A. 10 VDC output on pin 4 of control, thru door switch to:
        1) Power/cooldown switch
        2) Pin 11 of control - This input at pin 11 signals the control that the door is closed and the burner can be lit.
        3) Terminal 3 of ss relay
    B. Pin 15 of control to 24 volt transformer (L1 voltage) 1) 24 VAC to blower motor centrifugal switch
    C. Pin 10 of control to ss relay terminal 4
        1)
4. Blower Solid state relay energizedmotor energized.
5. As blower motor reaches operating speed, blower motor centrifugal switch closes. A. 24 VAC to ignition module
6. Ignition module operates (see ignition module sequence of operation)
7. Oven cycles on electronic control until power/ cooldown switch is moved from the "on" position, a different mode is selected or the door is opened.

NOTE: The blower motor is de-energized and gas valve (solenoid) closed when the door is opened while the oven is in the heat mode.

Cook

1. Conditions A. Oven in preheat.
2. Temperature is set.
3. Time is set and start key pressed.
4. Oven cycles at set temperature.

NOTE: In pulse mode (initiated at the beginning of the bake cycle), the blower motor is operated in 45 second cycles, with the first cycle being off then 45 seconds on. The pulse time cannot be longer than the bake time.

5. Time expires.
    A. Buzzer sounds continually until turned off.
6. Oven continues to cycle at set temperature.

NOTE: The blower motor and gas valve (solenoid) are de-energized when the door is opened while the oven is in the cook mode.

Cook and Hold

1. Conditions A. Oven in preheat.
2. A bake temperature and time is set.
3. A hold temperature and time is set and start key pressed.
4. Oven cycles at set temperature.

NOTE: In pulse mode (initiated at the beginning of the bake cycle), the blower motor is operated in 45 second cycles, with the first cycle being off then 45 seconds on. The pulse time cannot be longer than the bake time.

5. Time expires in cook mode.
    A. A. Buzzer sounds (short beep).
    B. Control lowers temperature to hold temperature.
6. Oven temperature reaches hold temperature.
    A. Display counts up time and flashes "hold"
7. Oven continues to cycle at hold temperature until oven is turned off or the hold function is turned off.

NOTE: The blower motor and gas valve (solenoid) are de-energized when the door is opened while the oven is in the hold mode.

Cooldown

1. Conditions
    A. Cooking completed, oven temperature needs to be lowered.
2. Power/cooldown switch to cooldown position.
3. Blower motor energized.

A. Door switch does not affect operation.

B. Burner will not lite.

4. Oven operates until power switch is moved from cooldown position.

SEQUENCE OF OPERATION - ELECTRIC OVEN

Solid State Control

1. Conditions.
   A. Fuses are good.
   B. Supply voltage to unit.
      1) L1 to power switch and one side of heater contacts C1, C2, C3
      2) L2 (L3 three phase) to motor; contactor coil; power light; heat light; temp control (pin 9); buzzer; timer motor; one side of heater contacts C2, C3 (C3 only for three phase)

NOTE: L2 of three phase connection goes to one side of heater contacts C2 3)

      3) Good chassis ground

   C. Power switch "off"
   D. Oven at room temperature
   E. Solid state control set to desired temperature.
   F. Door switch closed
   G. Fan speed switch in either position
2. Power switch turned "on", L1 voltage to:
   A. A. Power light
   B. Control pins 7 & 8
   C. Blower motor energized
   D. Pin 1 of timer
3. Control calls for heat, contacts 6/7 closed.
   A. Contactor coil energized.
      1) Heating elements energized.
   B. Heat light is on.
4. Oven reaches set temperature and control contacts 6/7 open.
   A. Power removed from contactor coil.
      1) Heating elements de-energized.
   B. Heat light goes out.
5. Oven cycles on solid state control until power switch is moved from the "on" position or the door is opened.

NOTE: The blower motor is de-energized when the door is opened and the oven is in the heat mode.

Electronic Control
Preheat

1. Conditions. A. Fuses are good. B. Supply voltage to unit. 1) L1 to power switch and one side of heater contacts C1 2) L2 (L3 three phase) to motor; contactor coil; power light; heat light; temp control (pin 9); buzzer; timer motor; one side of heater contacts C2, C3 (C3 only for three phase) NOTE: L2 of three phase connection goes to one side of heater contacts C2 3) Good chassis ground B. Power switch "off" C. Oven at room temperature D. Door switch closed E. Fan speed switch in either position
2. Power/cooldown switch turned "on"; L1 voltage to: A. Primary of control transformer 1) 6 VAC - in at pin 3 of control 2) 12 VAC - in at pin 1 of control 3) Common - in at pin 2 of control B. Terminal 1 of solid state relay contacts C. Pin 13 of control
3. Control set to desired temperature using set knob.
   A. 10 VDC output on pin 4 of control, thru door switch to:
      1) Power/cooldown switch
      2) Pin 11 of control - This input at pin 11 signals the control that the door is closed and the oven can heat.
      3) Terminal 3 of ss relay
   B. Pin 15 of control to contactor coil (L1 voltage)
      1) Heaters energized
   C. Pin 10 of control to ss relay terminal 4
      1) Solid state relay energized
4. Blower motor energized
5. Oven reaches set temperature:
   A. Power removed from contactor coil
      1) Heating elements de-energized
6. Oven cycles on electronic control until power switch is moved from the "on" position or the door is opened.

NOTE: The blower motor is de-energized when the door is opened and the oven is in the heat mode.

Cook

1. Conditions
   A. Oven in preheat.
2. Temperature is set.
3. Time is set and start key pressed.
4. Oven cycles at set temperature.

NOTE: In pulse mode (initiated at the beginning of the bake cycle), the blower motor is operated in 45 second cycles, with the first cycle being off then 45 seconds on. The pulse time cannot be longer than the bake time.

5. Time expires.
   A. Buzzer sounds continually.
6. Oven continues to cycle at set temperature.

NOTE: The blower motor is de-energized when the door is opened and the oven is in the cook mode.

Cook and Hold

1. Conditions
   A. Oven in preheat.
2. A bake temperature and time is set.
3. A hold temperature and time is set and start key pressed.
4. Oven cycles at set temperature.

NOTE:

5. Time expirIn pulse mode (initiated at the beginning of the bake cycle), the blower motor is operated in 45 second cycles, with the first cycle being off then 45 seconds on. The pulse time cannot be longer than the bake time.es in cook mode.
   A. Buzzer sounds (short beep).
   B. Control lowers temperature to hold temperature.
6. Oven temperature reaches hold temperature.
   A. Display counts up time and flashes "hold"
7. Oven continues to cycle at hold temperature until oven is turned off or the hold function is turned off.

NOTE: The blower motor is de-energized when the door is opened and the oven is in the hold mode.

Cooldown

1. Conditions
   A. Cooking completed, oven temperature needs to be lowered.
2. Power/cooldown switch to cooldown position.
3. Blower motor energized.
   A. Door switch does not affect operation.
   B. The heaters will not energize.
4. Oven operates until power switch is moved from cooldown position.

SCHEMATICS GAS OVENS

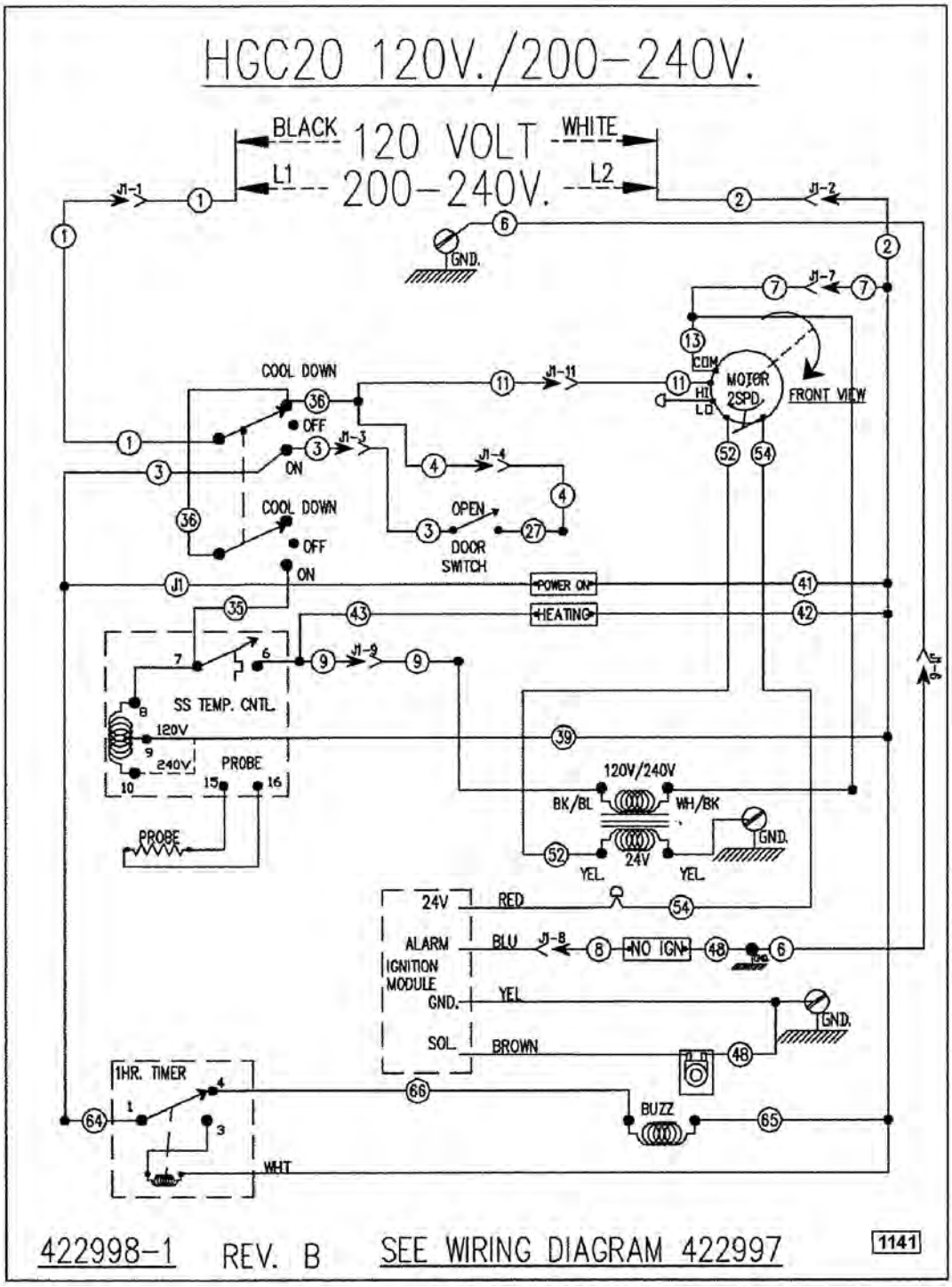

HGC20 - UP TO S/N: 481929306

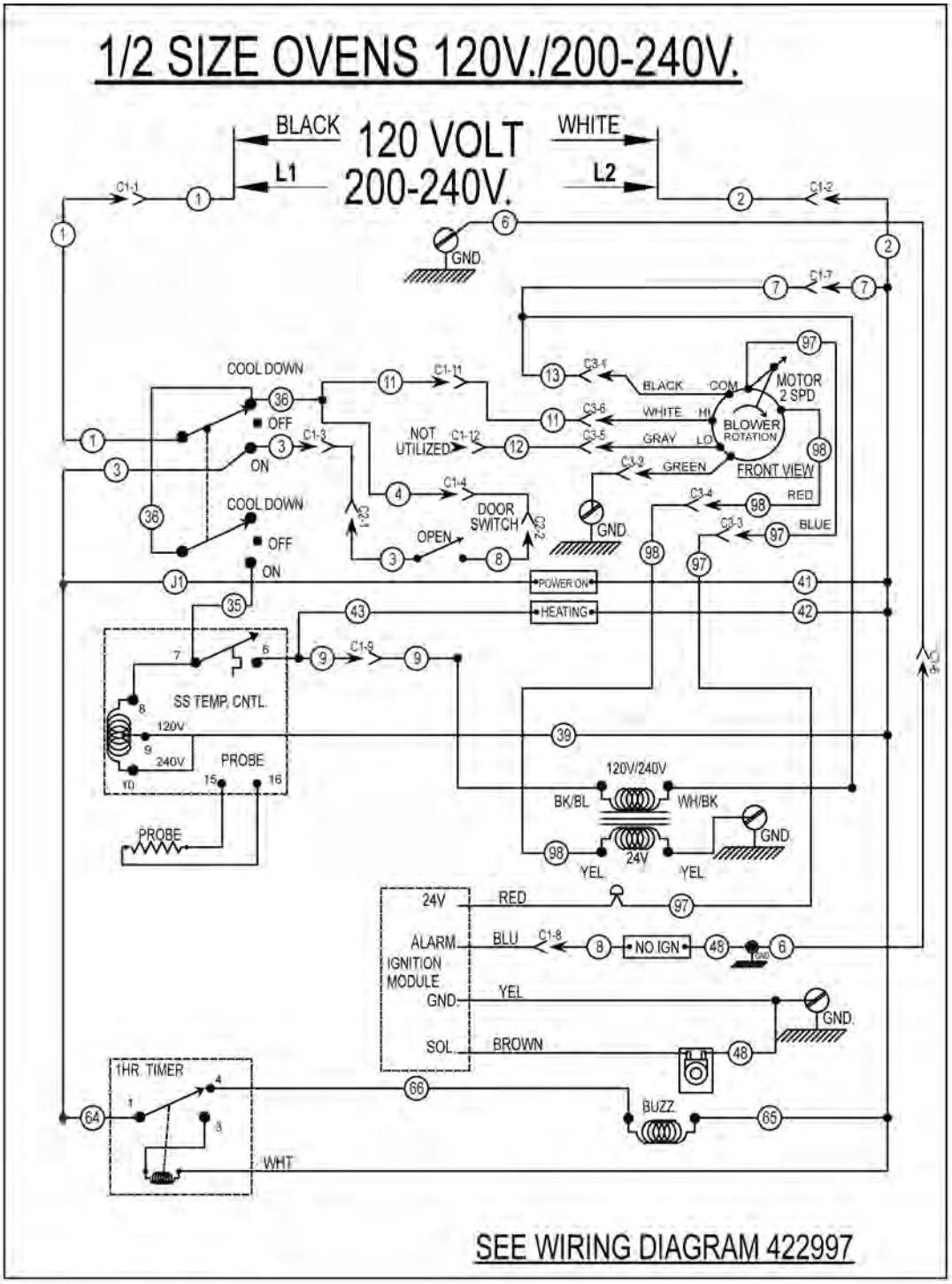

DERIVED FROM 422998 REV. E

AI4921

AFTER S/N: 481929307

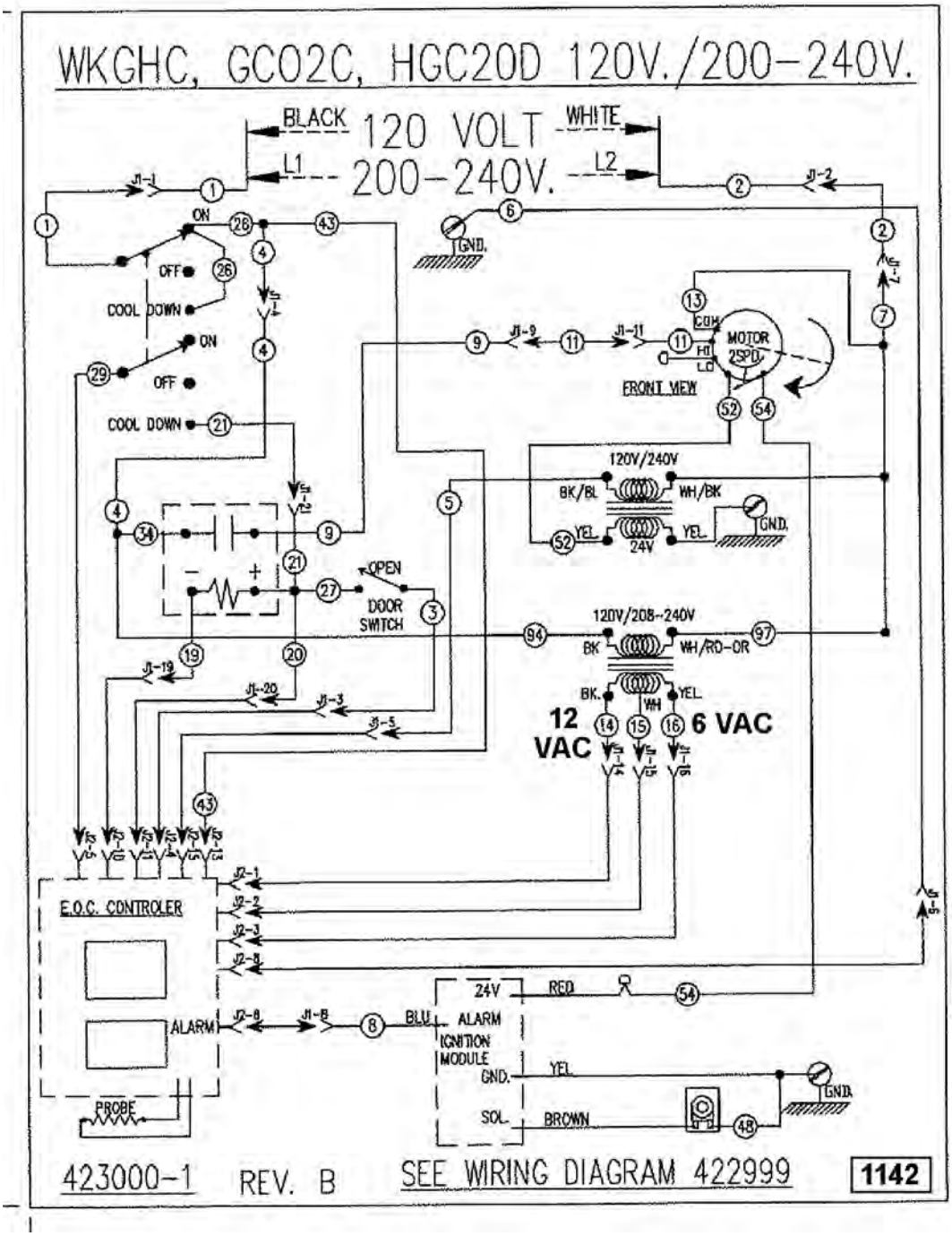
WKGHC, GCO2C, HGC20D 120V./200-240V.
BLACK
120 VOLT
WHITE
L1
200-240V.
L2
ON
OFF
COOL DOWN
ON
OFF
COOL DOWN
GND.
MOTOR 2SPD.
FRONT VIEW
120V/240V
BK/BL
WH/BK
YEL.
24V
YEL.
GND.
OPEN
DOOR SWITCH
120V/208-240V
BK
WH/RD-OR
BK.
WH
YEL.
12 VAC
6 VAC
E.O.C. CONTROLER
ALARM
PROBE
24V
RED
ALARM IGNITION MODULE
BLU
GND.
YEL
SOL.
BROWN
GND.
423000-1
REV. B
SEE WIRING DIAGRAM 422999
1142

HG20D

WIRING DIAGRAM - GAS OVENS

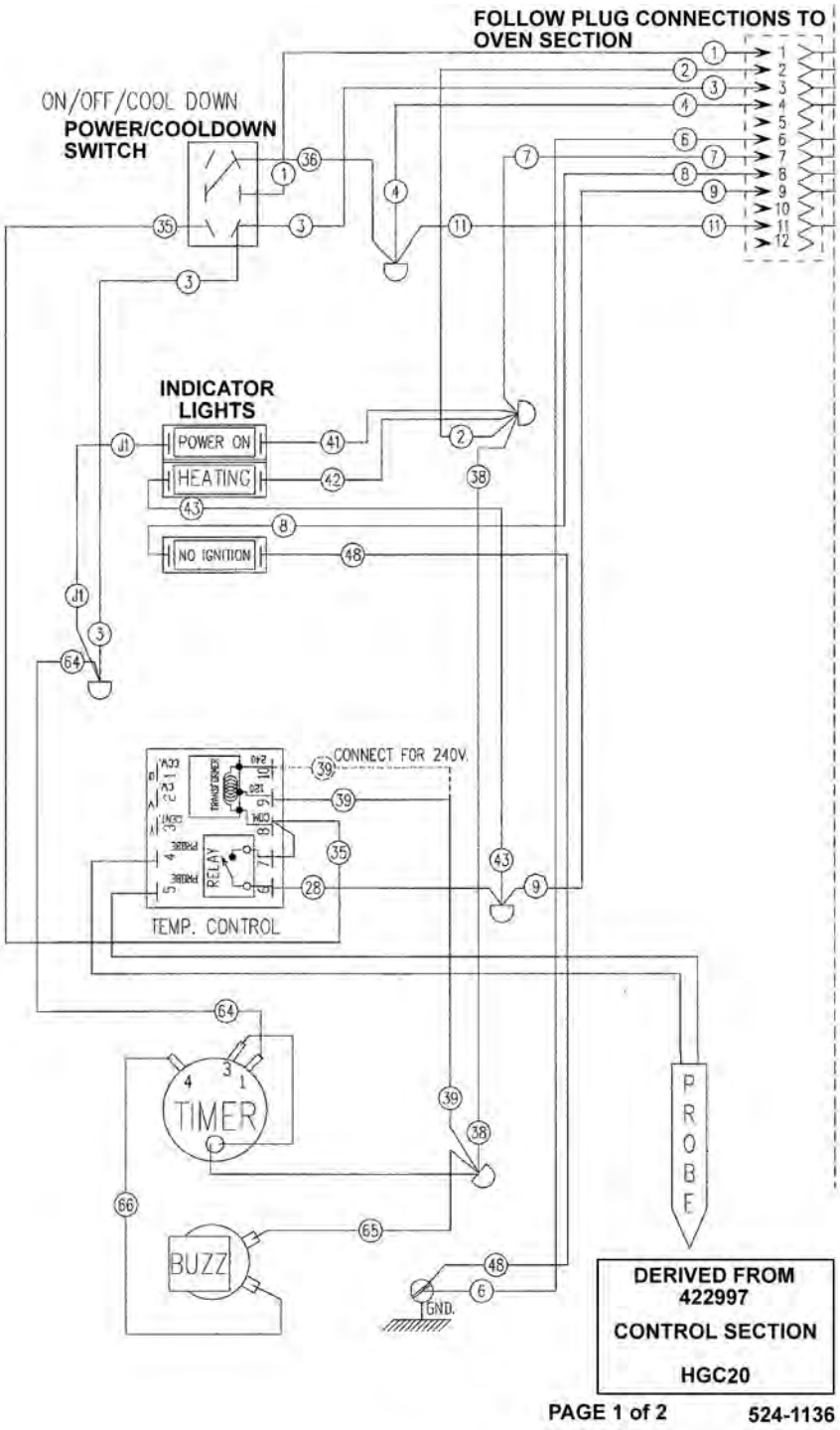

HGC20 - Control Section - UP TO S/N: 481929306

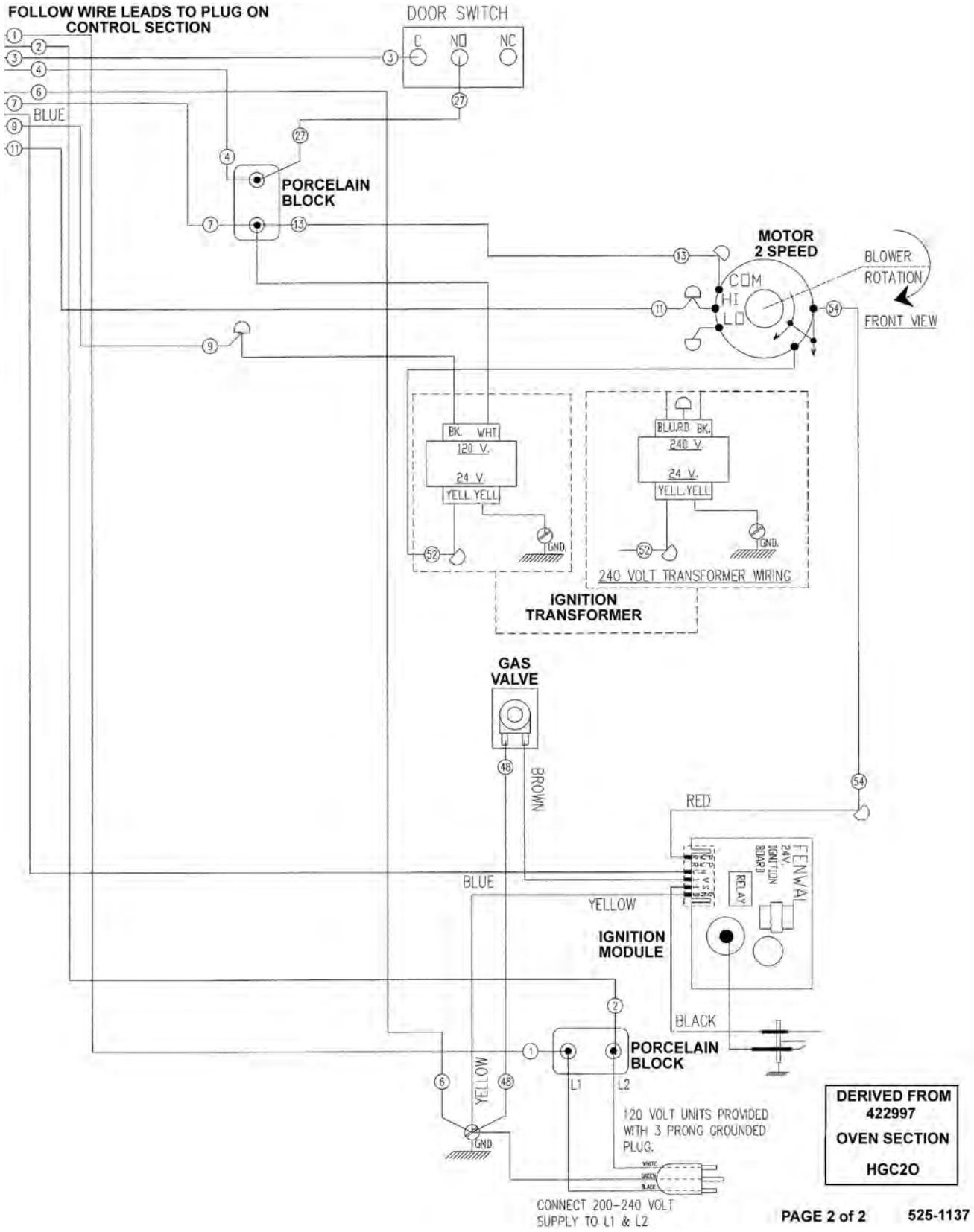

HGC20 - Oven Section - UP TO S/N: 481929306

11 x 17 Half Size Gas Convection Ovens - 120-200V - 50 & 60Hz - 1Ph -00-422997M - AI5633

STARTING AT SERIAL NUMBER 482054724.

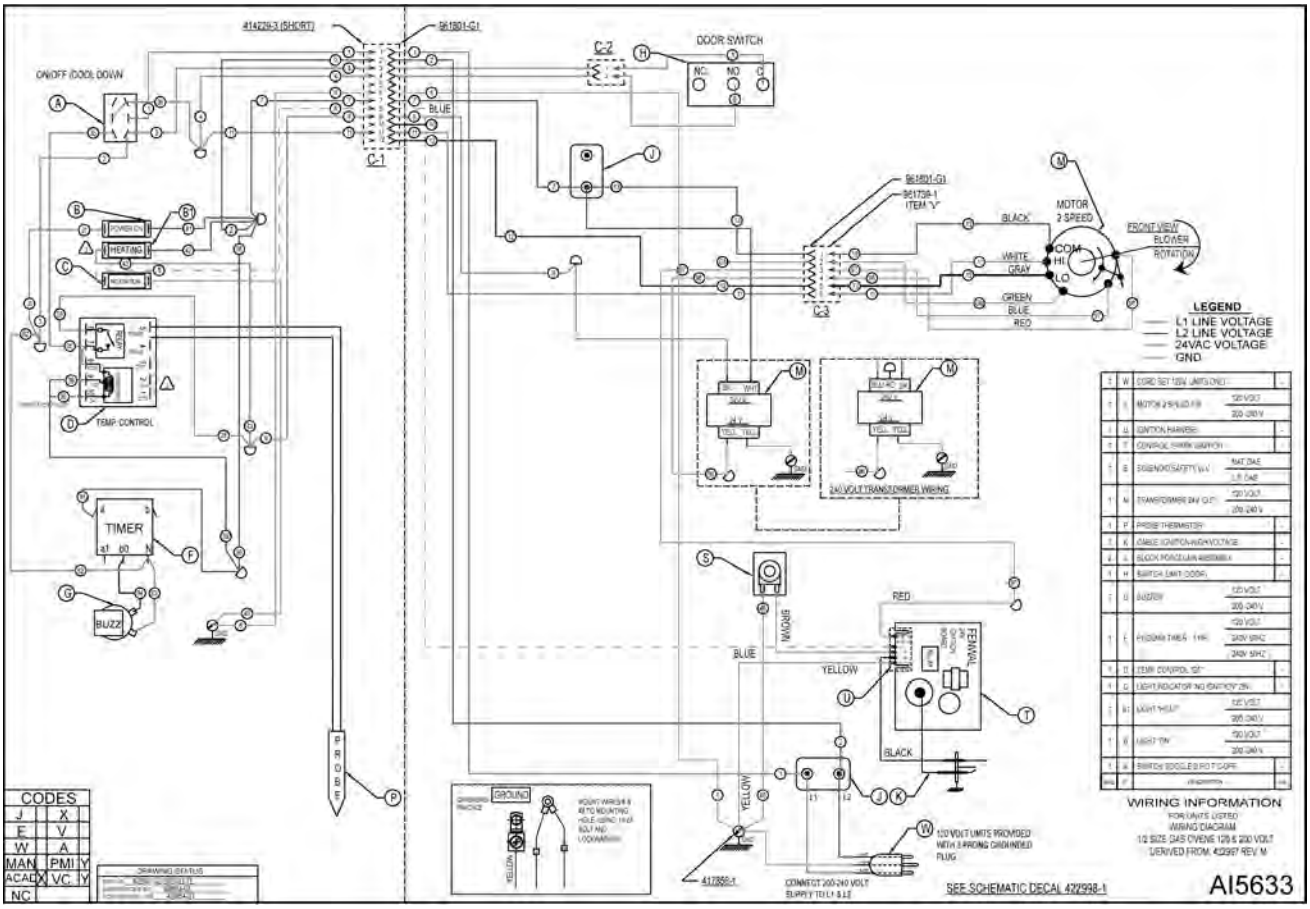

Fig. 59

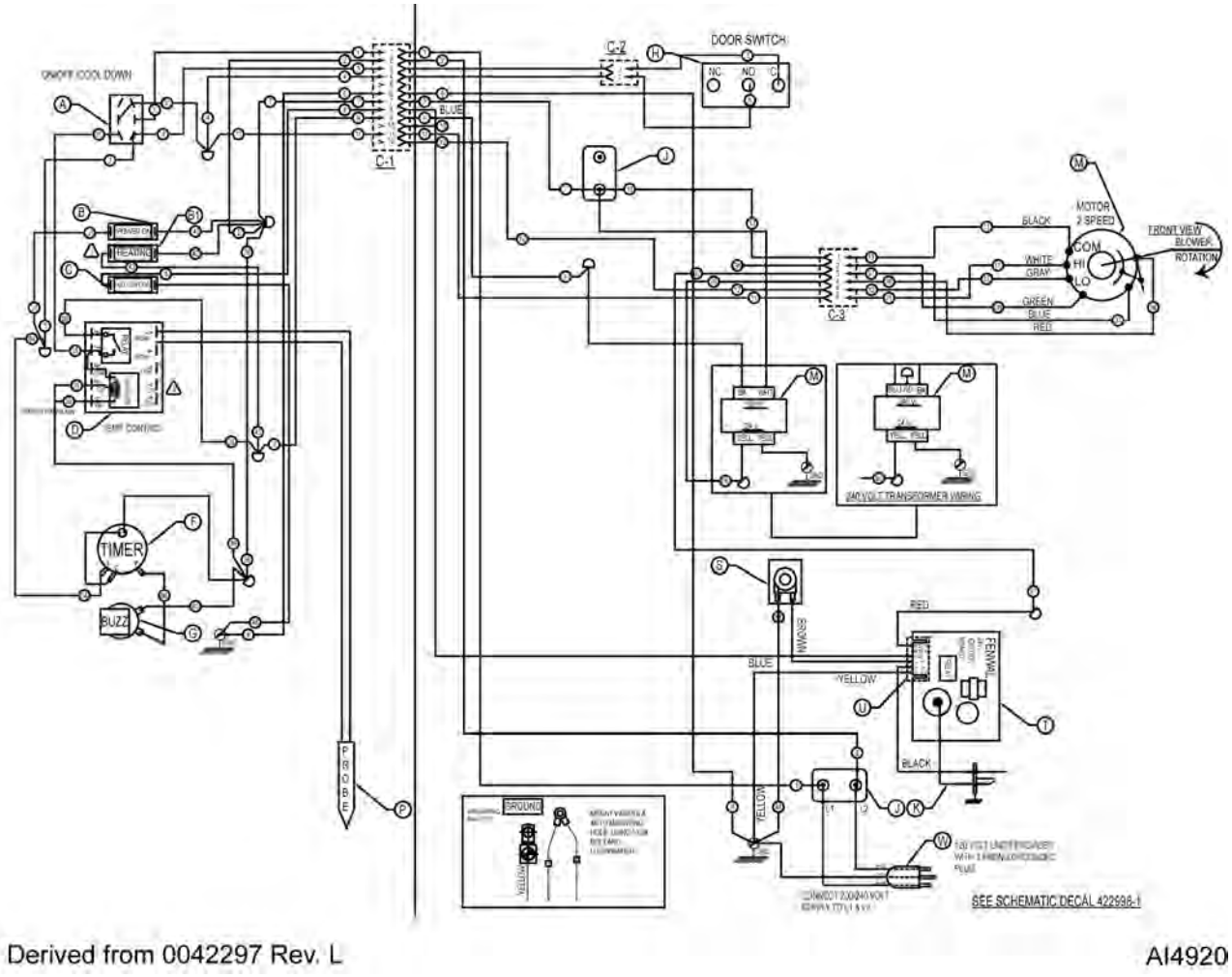

AFTER S/N: 481929307

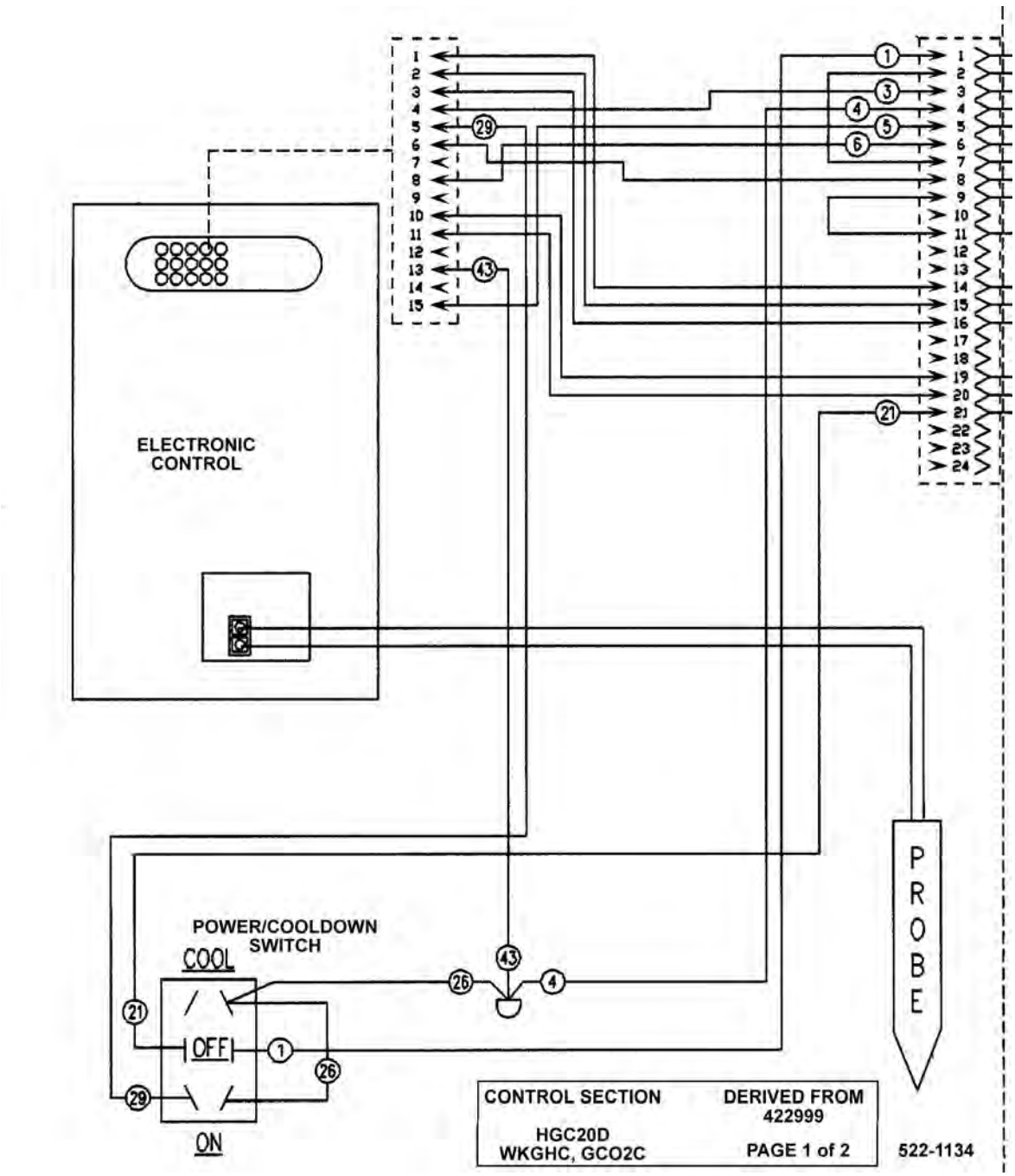

HGC20D - Control Section

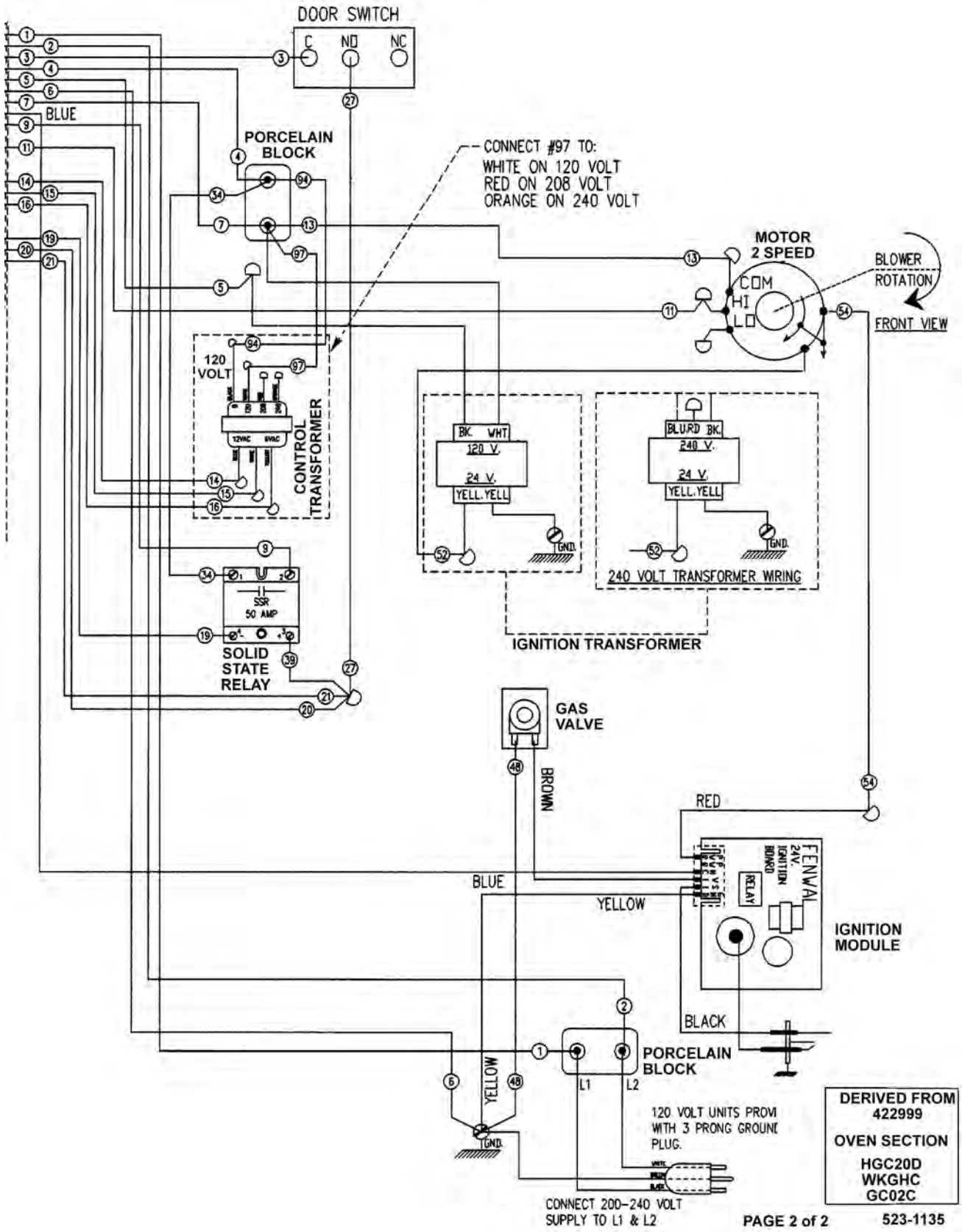

HGC20D- Oven Section

SCHEMATICS - ELECTRIC OVENS

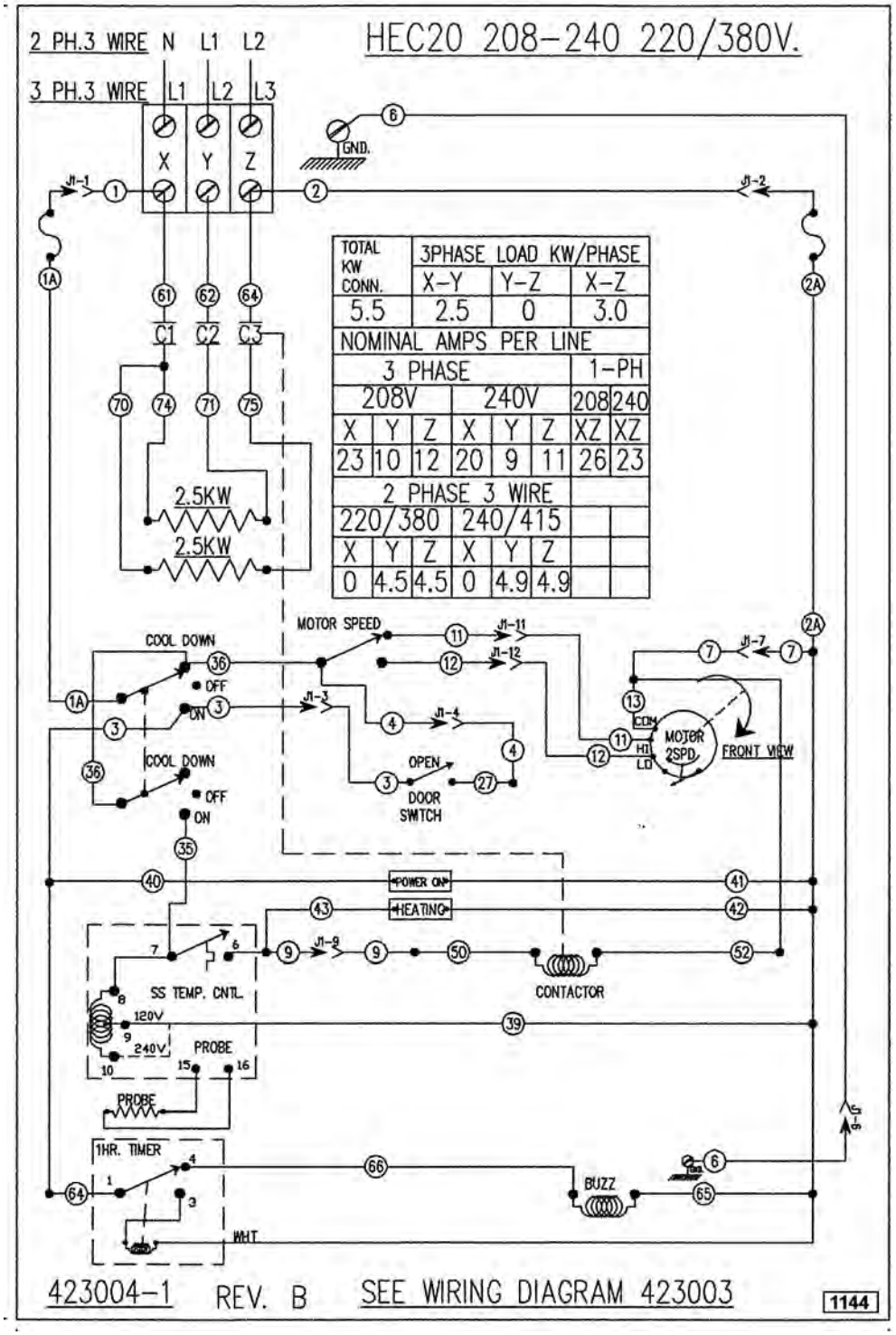

HEC20 - UP TO S/N: 481929289

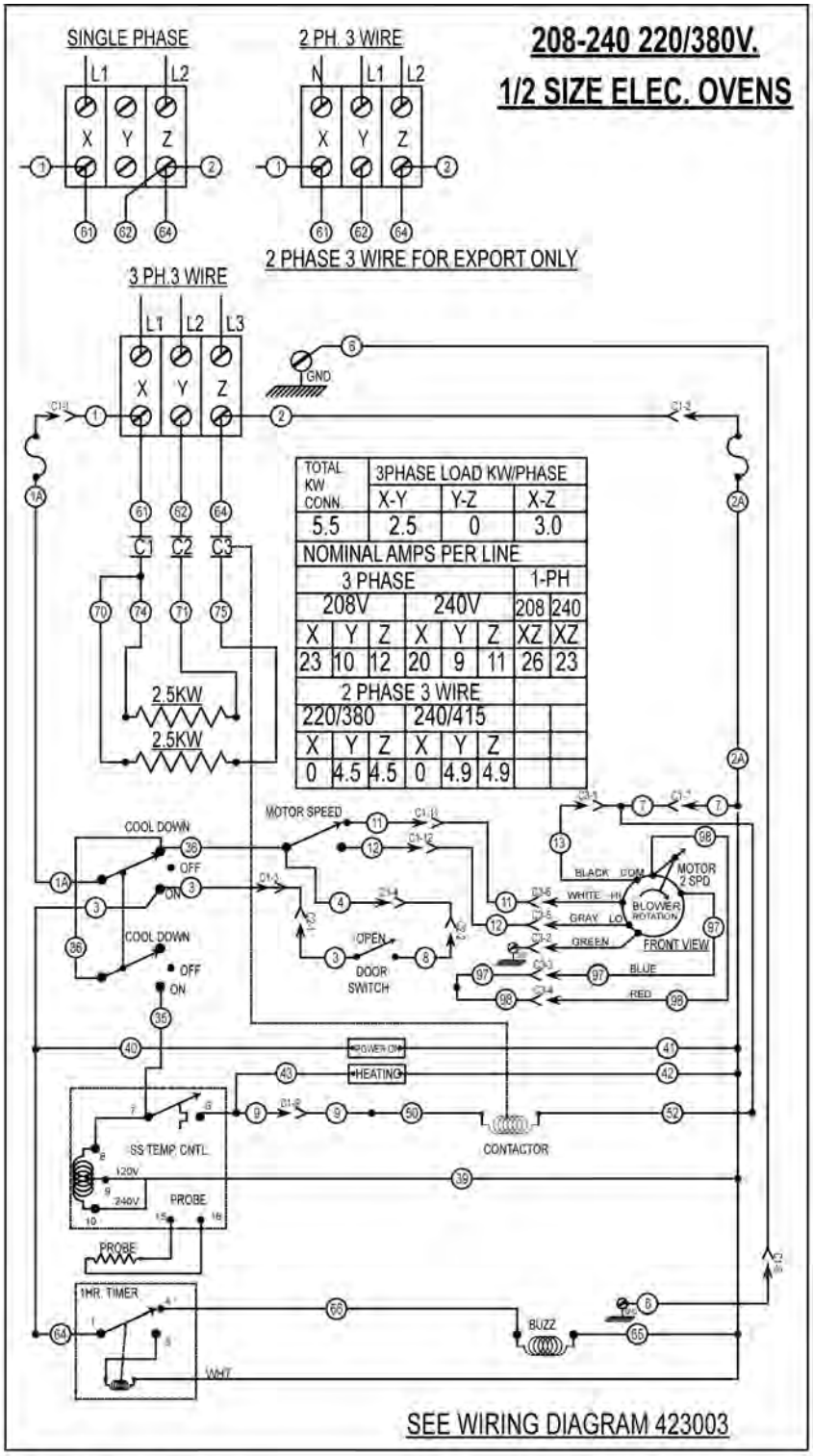

DERIVED FROM 423004 REV. G

AI4923

AFTER S/N: 481929290

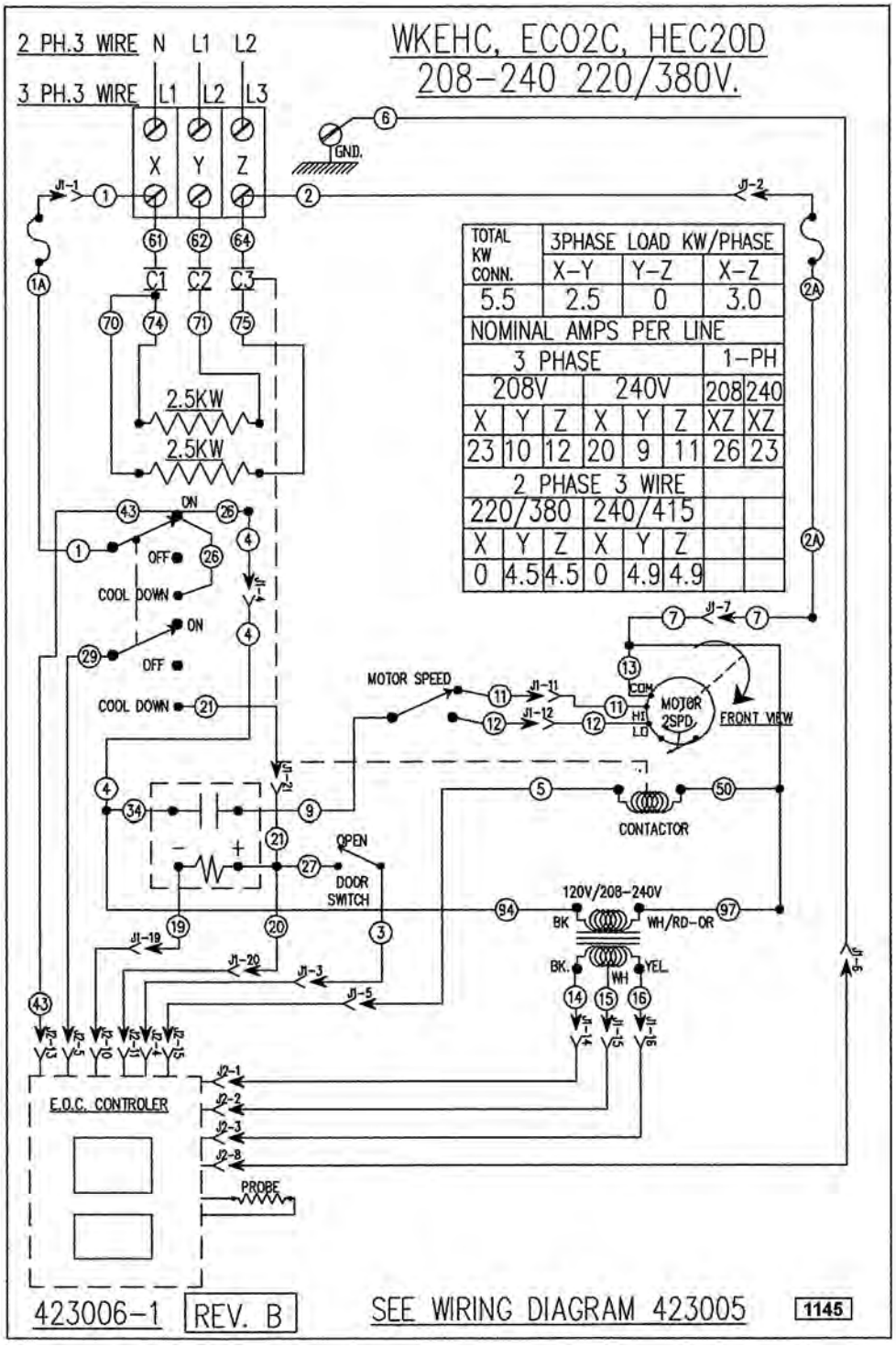
WKEHC, ECO2C, HEC20D
208-240 220/380V.
2 PH.3 WIRE N L1 L2
3 PH.3 WIRE L1 L2 L3
X Y Z
GND.
TOTAL KW CONN.
3PHASE LOAD KW/PHASE
X-Y Y-Z X-Z
5.5 2.5 0 3.0
NOMINAL AMPS PER LINE
3 PHASE 1-PH
208V 240V 208 240
X Y Z X Y Z XZ XZ
23 10 12 20 9 11 26 23
2 PHASE 3 WIRE
220/380 240/415
X Y Z X Y Z
0 4.5 4.5 0 4.9 4.9
2.5KW
2.5KW
ON
OFF
COOL DOWN
MOTOR SPEED
MOTOR 2SPD.
FRONT VIEW
CONTACTOR
OPEN
DOOR SWITCH
120V/208-240V
BK
WH/RD-OR
BK.
WH
YEL.
E.O.C. CONTROLER
PROBE
423006-1
REV. B
SEE WIRING DIAGRAM 423005
1145

HEC20D

WIRING DIAGRAM - ELECTRIC OVENS

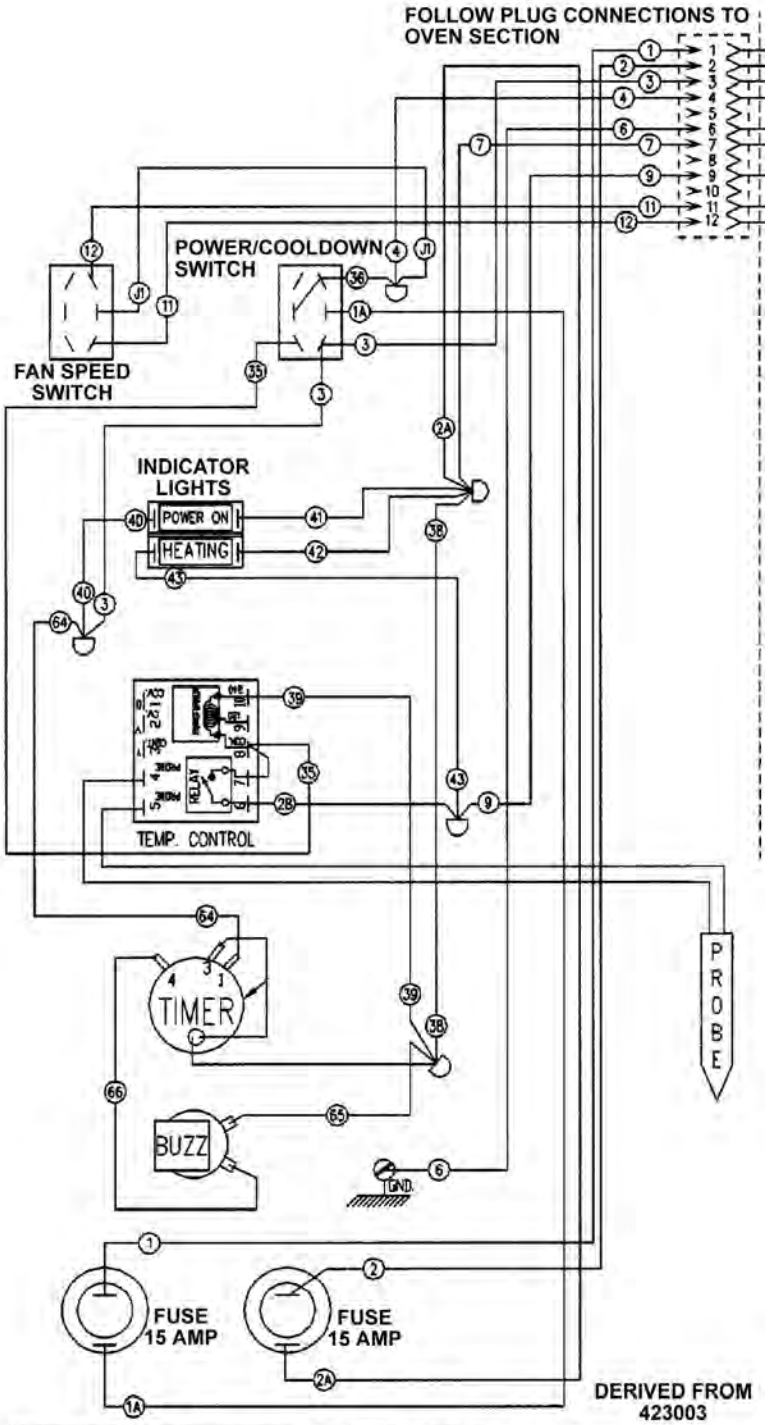

TOTAL KW CONN.	3PHASE LOAD KW/PHASE		
	X-Y	Y-Z	X-Z
5.5	2.5	0	3.0

NOMINAL AMPS PER LINE							
3 PHASE						1-PH	
208V			240V			208	240
X	Y	Z	X	Y	Z	XZ	XZ
23	10	12	20	9	11	26	23

TOTAL KW CONN.	3PHASE LOAD KW/PHASE		
	X-N	Y-N	Z-N
5.5	0	2.5	3.0

NOMINAL AMPS PER LINE							
2 PHASE 3 WIRE							
220/380			240/415				
X	Y	Z	X	Y	Z		
0	4.5	4.5	0	4.9	4.9		

HEC20 - Control Section - UP TO S/N: 481929290

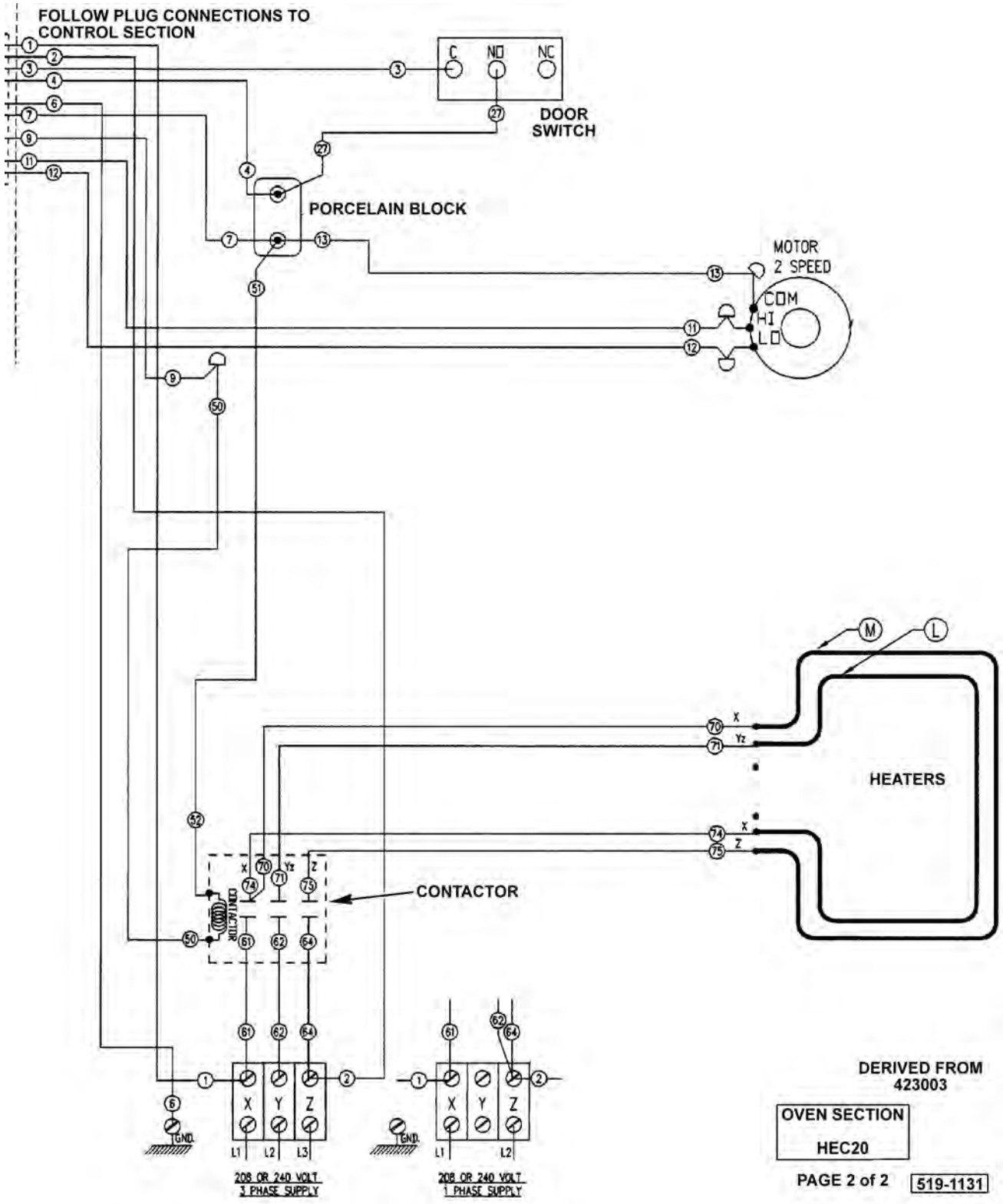

HEC20 - Oven Section - UP TO S/N: 481929289

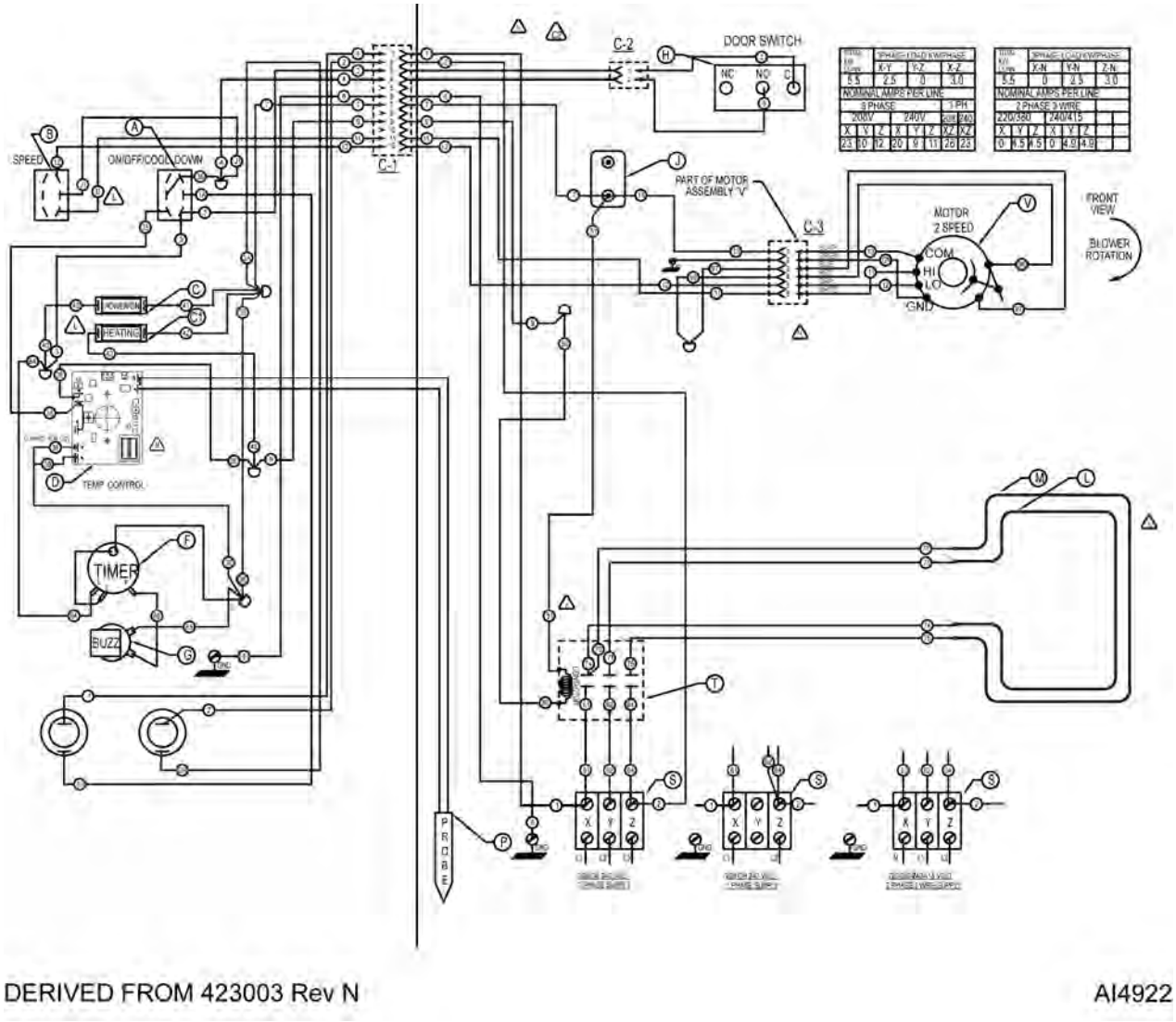

DERIVED FROM 423003 Rev N

AI4922

AFTER S/N: 481929290

11 x 17 Half Size Elec Convection Ovens - 208-415V - 50 & 60Hz - 1-2-3Ph -00-423003P - AI5634

STARTING AT SERIAL NUMBER 482055841

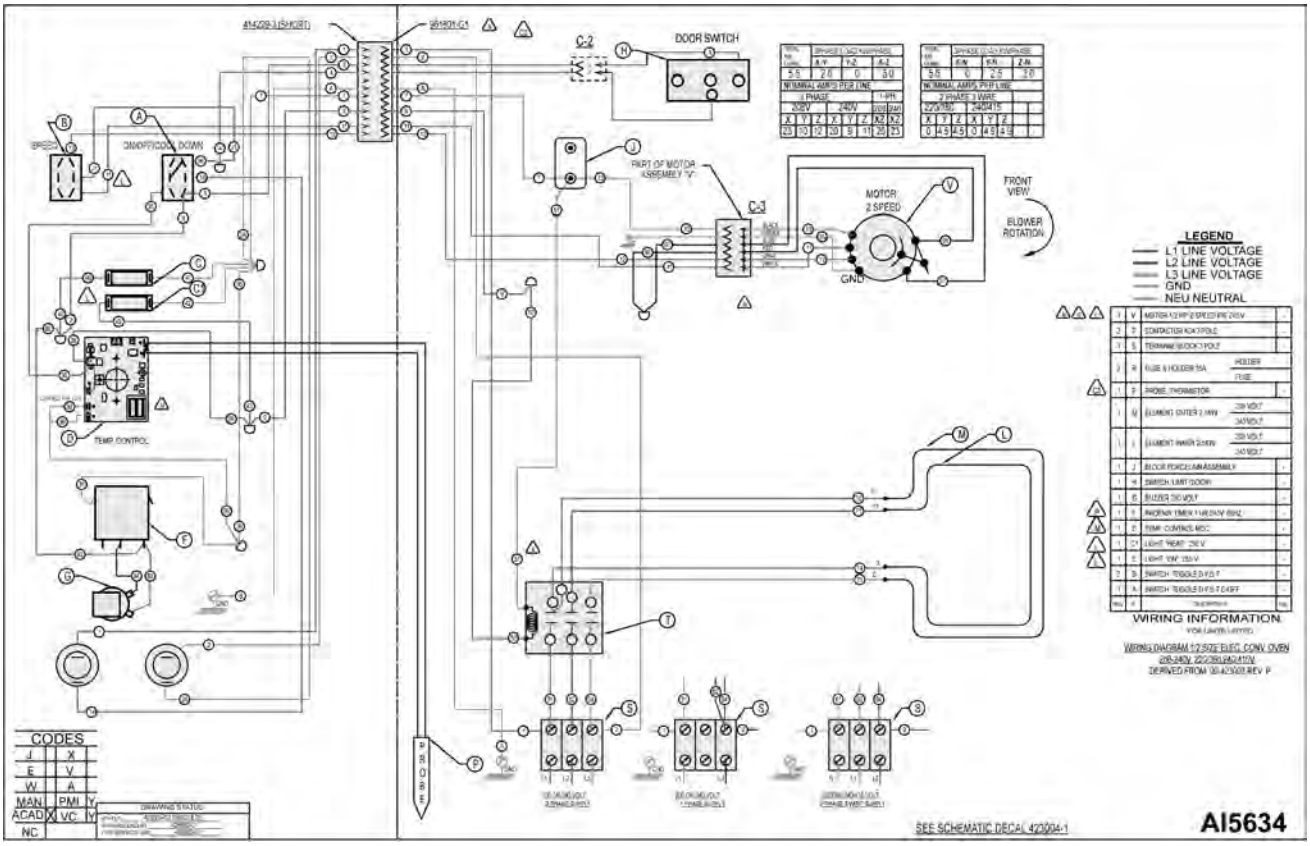

Fig. 69

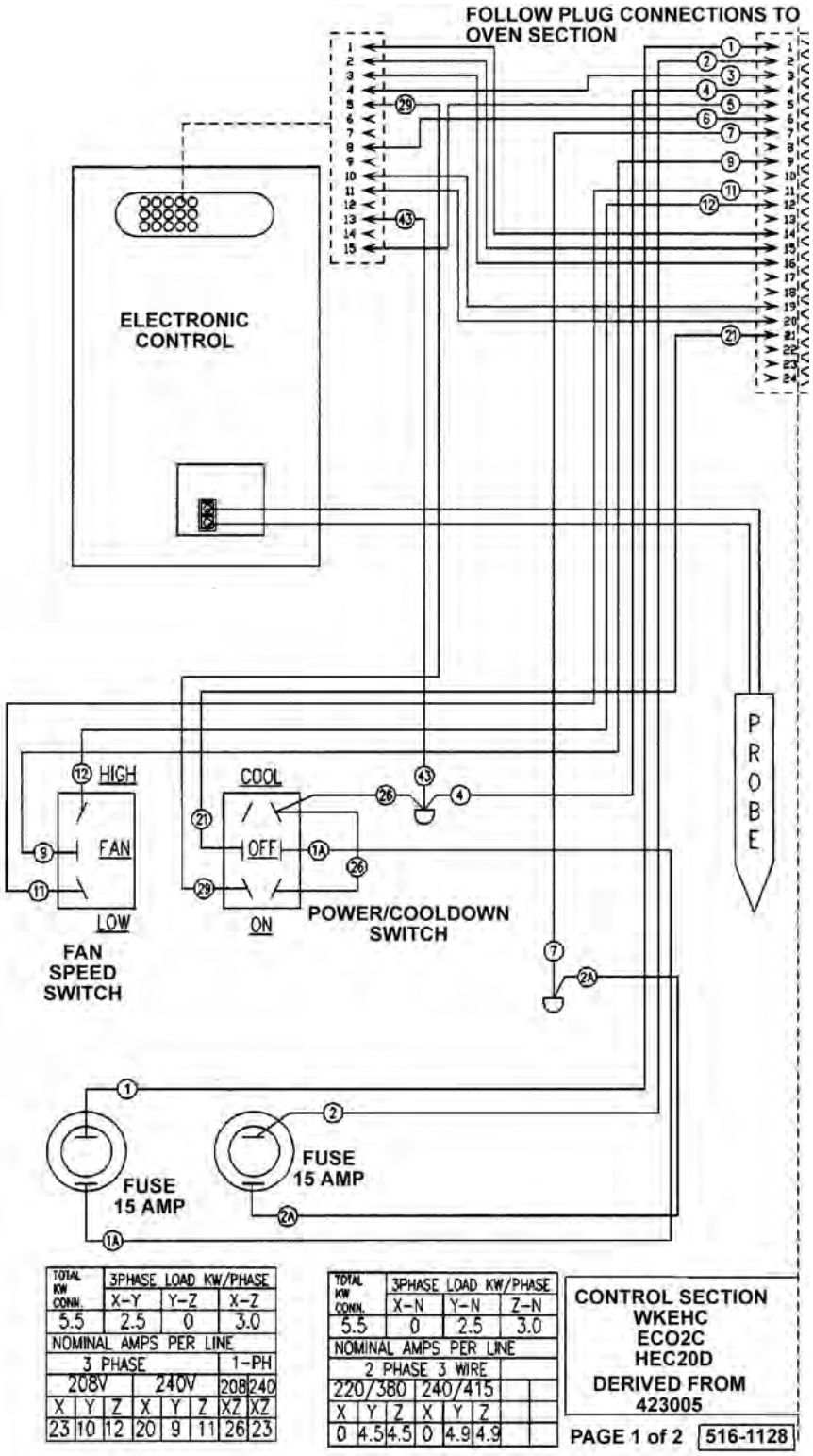

TOTAL KW CONN.	3PHASE LOAD KW/PHASE		
	X-Y	Y-Z	X-Z
5.5	2.5	0	3.0

NOMINAL AMPS PER LINE							
3 PHASE						1-PH	
208V			240V			208	240
X	Y	Z	X	Y	Z	XZ	XZ
23	10	12	20	9	11	26	23

TOTAL KW CONN.	3PHASE LOAD KW/PHASE		
	X-N	Y-N	Z-N
5.5	0	2.5	3.0

NOMINAL AMPS PER LINE							
2 PHASE 3 WIRE							
220/380			240/415				
X	Y	Z	X	Y	Z		
0	4.5	4.5	0	4.9	4.9		

HEC20D - Control Section

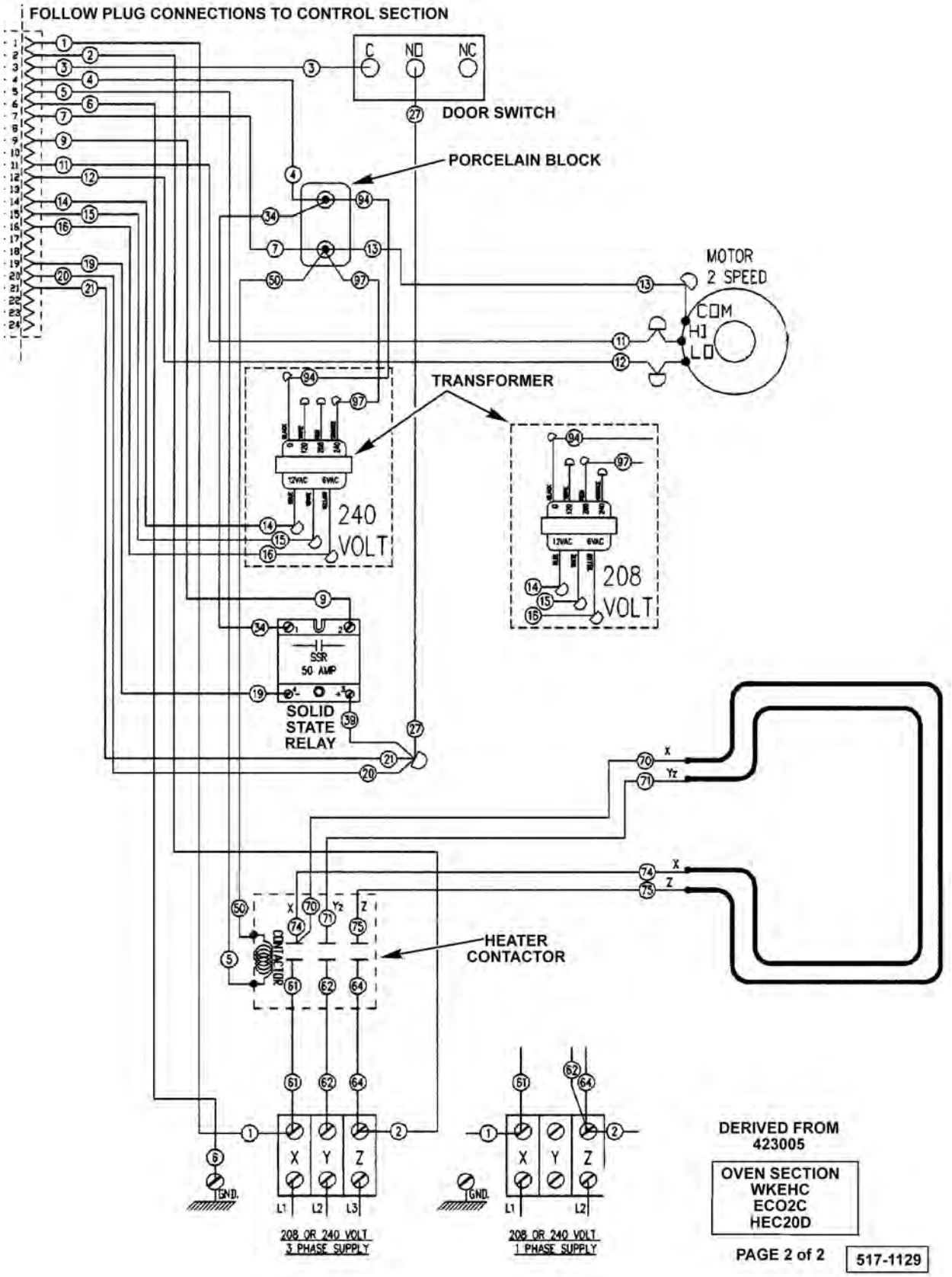

HGC20D- Oven Section

TROUBLESHOOTING

ELECTRIC OVENS

SYMPTOM	POSSIBBLE CAUSED
No power to oven controls.	1. Main breaker open. 2. Control circuit fuses open. 3. 12/6 volt transformer inoperative. (Electronic control)
No oven operation; power to controls.	1. Power/cooldown switch inoperative.
Blower motor operates when oven is heating, but not in cooldown.	1. Power/cooldown switch inoperative.
Blower motor does not operate, oven heats.	1. Door switch open or inoperative. 2. Speed selection switch malfunction. 3. Blower motor inoperative. 4. Solid state relay malfunction. (Electronic Control) 5. Electronic control inoperative. (Electronic Control)
Oven is slow to heat or not hot enough.	1. Incorrect line voltage. 2. One phase of 3 phase out. 3. Thermostat or control malfunction. 4. Blower motor inoperative. 5. Contactor malfunction. 6. Temperature probe malfunction.
Oven temperature is too hot.	1. Thermostat or control not calibrated. 2. Thermostat or control malfunction. 3. Contactor inoperative.
No heat; blower motor operates.	1. Thermostat or control not calibrated. 2. Thermostat or control malfunction. 3. Contactor inoperative.
Electronic control does not function.	1. See "ELECTRONIC CONTROL" in "SERVICE PROCEDURES AND ADJUSTMENTS".
Door does not seal or will not shut properly.	1. Doors out of adjustment. 2. Door seals inoperative. 3. Door catch malfunction.

GAS OVENS

SYMPTOM	POSSIBBLE CAUSED
No power to oven controls.	1. Unit unplugged 2. Power/cooldown switch inoperative. 3. 12/6 volt transformer inoperative. (Electronic control)
No oven operation; power to controls.	1. Door switch open or inoperative. 2. Solid state relay malfunction. (Electronic control) 3. Blower motor malfunction. 4. Electronic control malfunction.
Gas does not ignite; no spark.	1. 24 volt transformer not functioning. 2. Spark ignition control inoperative or not grounded. 3. Solid state control or probe malfunction. 4. Electronic control or probe inoperative. 5. Centrifugal switch in blower motor inoperative.
Oven is slow to heat or not hot enough.	1. Gas pressure not correct. 2. Control malfunction.(solid state or electronic) 3. Probe inoperative. 4. Blower motor malfunction. 5. Check orifice.
Gas ignites, but will not maintain flame.	1. Insufficient gas pressure. 2. Flame sensor not positioned in flame. 3. Spark ignition control malfunction. 4. Check orifice.
Sparks but does not ignite.	1. Manual gas valve off. 2. Gas valve (solenoid) malfunction. 3. Spark ignition control inoperative.
Electronic control does not function.	1. See "ELECTRONIC CONTROL" in "SERVICE PROCEDURES AND ADJUSTMENTS".
Door does not seal or will not shut properly.	1. Doors out of adjustment. 2. Door seals inoperative. 3. Door catch malfunction.

414229-3 (SHORT)

961801-G1

C-1

C-2

C-3

DOOR SWITCH

NC NO C

ON/OFF /COOL DOWN

BLUE

POWER ON

HEATING

NO IGNITION

RELAY

PROBE

CENT.

COM.

CW.

CCW.

TRANSFORMER

120

240

CONNECT FOR 208-240V.

TEMP. CONTROL

TIMER

a b

a1 b0 N

BUZZ

GND.

961801-G1

961739-1
ITEM "V"

BLACK

WHITE

GRAY

GREEN

BLUE

RED

MOTOR
2 SPEED

COM

HI

LO

FRONT VIEW
BLOWER
ROTATION

BK. WHT

120 V.

24 V.

YELL. YELL.

240 VOLT TRANSFORMER WIRING

BLU.RD BK.

240 V.

24 V.

YELL. YELL.

PROBE

BROWN

BLUE

YELLOW

RED

BLACK

FENWAL
24V.
IGNITION
BOARD

RELAY

L1

L2

GROUNDING
PRACTICE

GROUND

MOUNT WIRES 6 &
48 TO MOUNTING
HOLE, USING 10-24
BOLT AND
LOCKWASHER

417856-1

CONNECT 200-240 VOLT
SUPPLY TO L1 & L2

120 VOLT UNITS PROVIDED
WITH 3 PRONG GROUNDED
PLUG.

SEE SCHEMATIC DECAL 422998-1

LENGEND

- L1 LINE VOLTAGE
- L2 LINE VOLTAGE
- 24VAC VOLTAGE
- GND

REQ.	IT.	DESCRIPTION	FIN.
1	W	CORD SET 120V. UNITS ONLY	-
1	V	MOTOR 2 SPEED FIR — 120 VOLT / 200 -240 V.	
1	U	IGNITION HARNESS	-
1	T	CONTROL, SPARK IGNITION	-
1	S	SOLENOID SAFETY VLV. — NAT. GAS / L.P. GAS	
1	M	TRANSFORMER 24V. OUT — 120 VOLT / 200 -240 V.	
1	P	PROBE THERMISTOR	-
1	K	CABLE, IGNITION-HIGH VOLTAGE	-
2	J	BLOCK,PORCELAIN ASSEMBLY	-
1	H	SWITCH, LIMIT (DOOR)	-
1	G	BUZZER — 120 VOLT / 200 -240 V.	
1	F	PHOENIX TIMER - 1 HR — 120 VOLT / 240V. 60HZ / 240V. 50HZ	
1	D	TEMP. CONTROL "G5"	-
1	C	LIGHT,INDICATOR "NO IGNITION" 28V.	-
1	B1	LIGHT "HEAT" — 120 VOLT / 200 -240 V.	
1	B	LIGHT "ON" — 120 VOLT / 200 -240 V.	
1	A	SWITCH, TOGGLE D.P.D.T C-OFF	-

CODES			
J		X	
E		V	
W		A	
MAN		PMI	Y
ACAD	X	VC	Y
NC			

DRAWING STATUS

STATUS 422997-G2 OBSOLETE

SUPERSEDED BY 428654-G1

FOR SERVICE USE 428654-G1

WIRING INFORMATION

FOR UNITS LISTED

WIRING DIAGRAM

1/2 SIZE GAS OVENS 120 & 200 VOLT

DERIVED FROM: 422997 REV. M

STARTING SERIAL NUMBER 482054724

AI5633

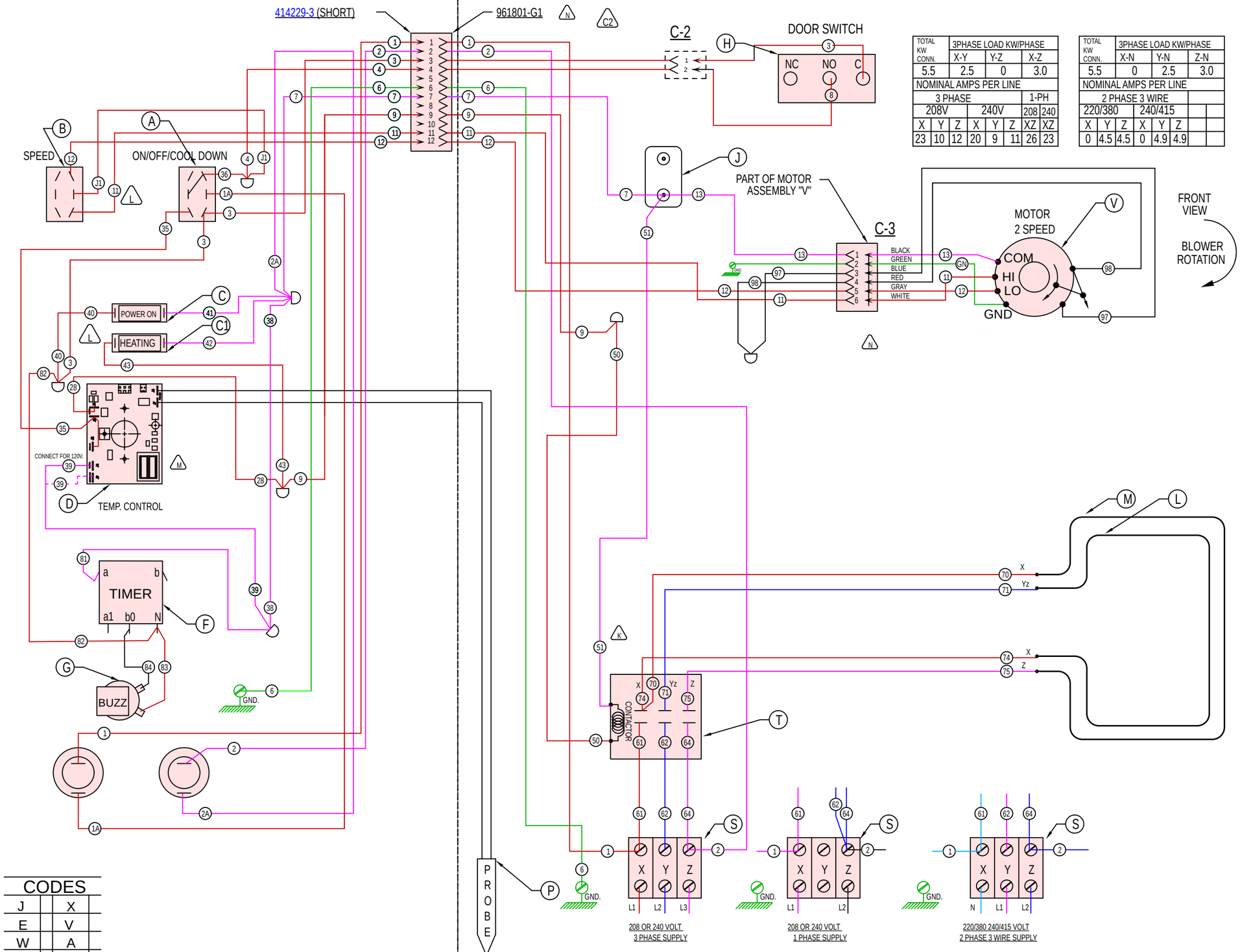

TOTAL KW CONN.	3PHASE LOAD KW/PHASE		
	X-Y	Y-Z	X-Z
5.5	2.5	0	3.0
NOMINAL AMPS PER LINE			
3 PHASE			1-PH
208V		240V	208 240
X Y Z	X Y Z		XZ XZ
23 10 12	20 9 11		26 23

TOTAL KW CONN.	3PHASE LOAD KW/PHASE		
	X-N	Y-N	Z-N
5.5	0	2.5	3.0
NOMINAL AMPS PER LINE			
2 PHASE 3 WIRE			
220/380	240/415		
X Y Z	X Y Z		
0 4.5 4.5	0 4.9 4.9		

LEGEND

- L1 LINE VOLTAGE
- L2 LINE VOLTAGE
- L3 LINE VOLTAGE
- GND
- NEU NEUTRAL

CODES			
J		X	
E		V	
W		A	
MAN		PMI	Y
ACAD	X	VC	Y
NC			

DRAWING STATUS

STATUS 423003-G2 OBSOLETE
SUPERSEDED BY 428652-G1
FOR SERVICE USE 428652-G1

REQ.	IT.	DESCRIPTION	FIN.
1	V	MOTOR 1/2 HP. 2 SPEED FIR 240 V	-
2	T	CONTACTOR 40A 3 POLE	-
1	S	TERMINAL BLOCK 3 POLE	-
2	R	FUSE & HOLDER 15A — HOLDER	
		FUSE	
1	P	PROBE, THERMISTOR	-
1	M	ELEMENT, OUTER 2.5KW — 208 VOLT	
		240 VOLT	
1	L	ELEMENT, INNER 2.5KW — 208 VOLT	
		240 VOLT	
1	J	BLOCK,PORCELAIN ASSEMBLY	-
1	H	SWITCH, LIMIT (DOOR)	-
1	G	BUZZER 230 VOLT	-
1	F	PHOENIX TIMER 1 HR 240V. 60HZ	-
1	D	TEMP. CONTROL NCC	-
1	C1	LIGHT, "HEAT" 250 V.	-
1	C	LIGHT, "ON" 250 V.	-
2	B	SWITCH, TOGGLE D.P.D.T	-
1	A	SWITCH, TOGGLE D.P.D.T C-OFF	-

SEE SCHEMATIC DECAL 423004-1

WIRING INFORMATION

FOR UNITS LISTED
WIRING DIAGRAM 1/2 SIZE ELEC. CONV. OVEN
208-240V. 220/380,240/415V.
DERIVED FROM: 00-423003 REV. P
STARTING SERIAL NUMBER 482055841

AI5634