VULCAN

CATALOG OF REPLACEMENT PARTS

CEF SERIES
COUNTERTOP FRYERS

MODELS

CEF40
CEF75

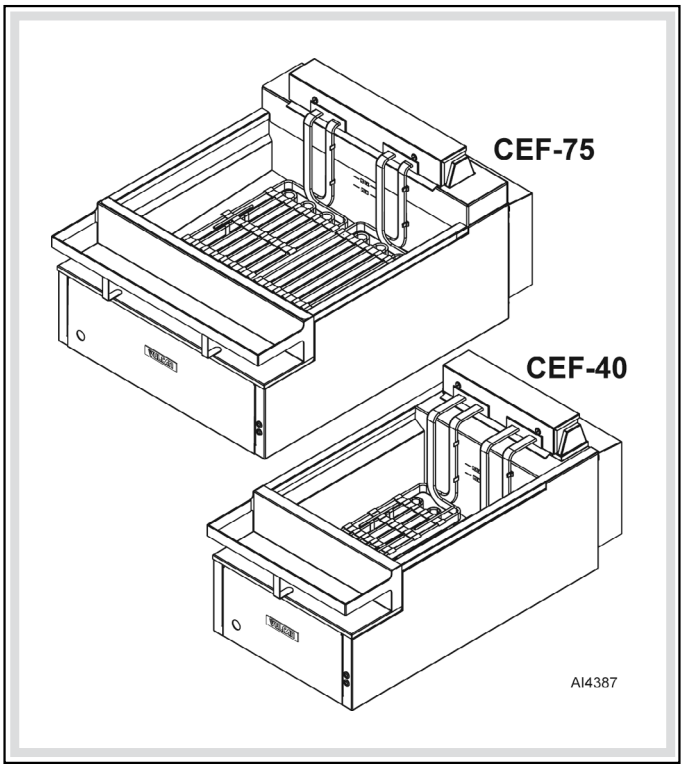

For additional information on Vulcan Equipment or to locate an authorized parts and service provider in your area, visit our website at www.vulcanequipment.com

VULCAN
DIVISION OF ITW FOOD EQUIPMENT GROUP, LLC
WWW.VULCANEQUIPMENT.COM

3600 NORTH POINT BLVD.
BALTIMORE, MD 21222

F-43340 Rev C (July 2021)

 © VULCAN-HART COMPANY 2021

Table of Contents

5 CONTROL PANEL
7 ELECTRICAL COMPONENTS
9 HEATING ELEMENTS (CEF40)
11 HEATING ELEMENTS (CEF75)
13 PANELS

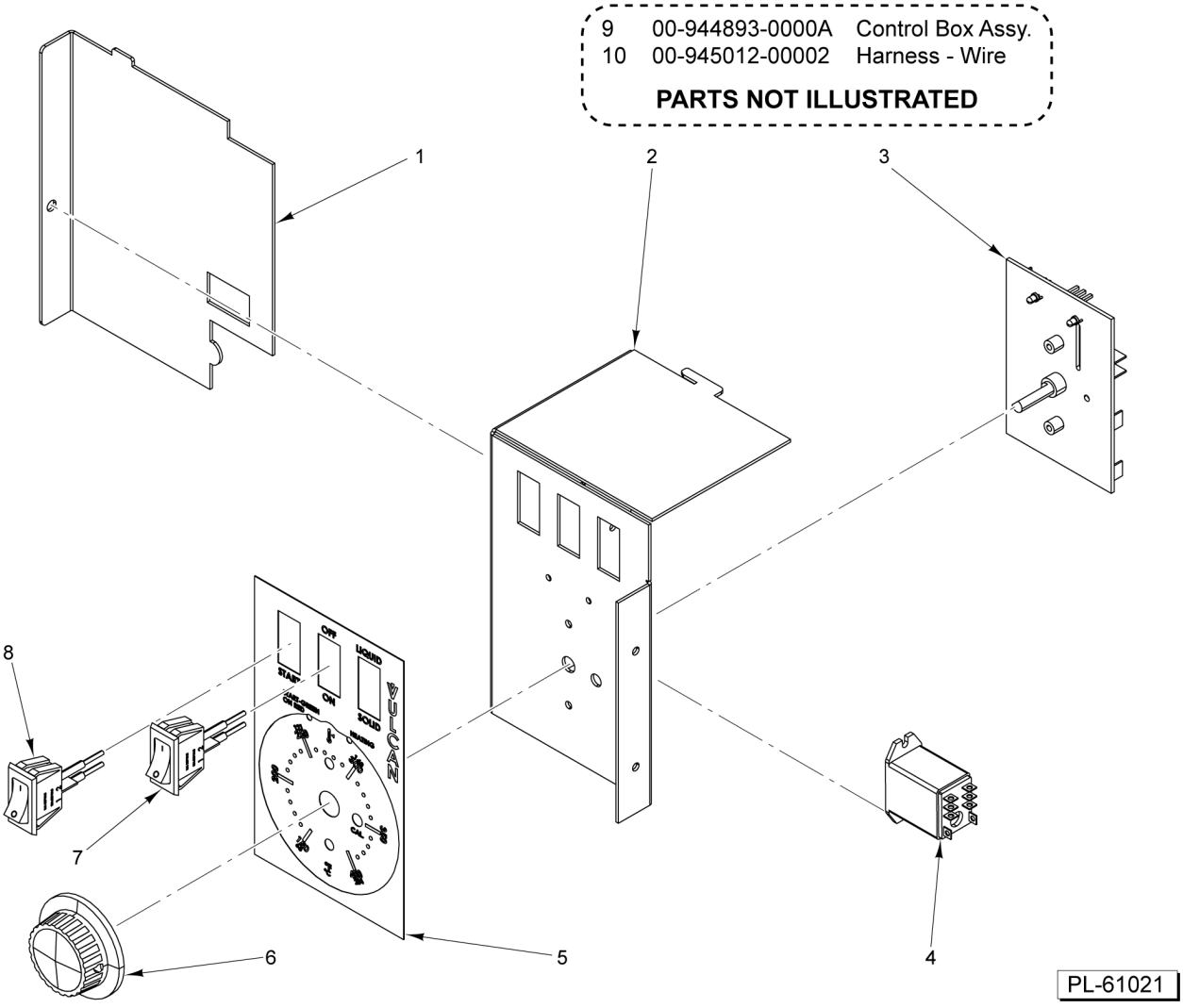

CONTROL PANEL

CONTROL PANEL

ILLUS. PL-61021	PART NO.	NAME OF PART	AMT.
1	00-944893-00002	Control Box - Back	1
2	00-944893-00001	Control Box - Front	1
3	00-428897-00009	Control Assy	1
4	00-416535-00004	Switch - Relay S.P.D.T. 24 V. Coil	1
5	00-944982-00001	Overlay - Control	1
6	00-411242-00001	Knob	1
7	00-427755-000G1	Rocker Switch Assy	2
8	00-427755-000G2	Rocker Switch Assy	1
9	00-944893-0000A	Control Box Assy. (CEF A) (Incls. Items 1 thru 8)	1
10	00-945012-00002	Harness - Wire (Front to Back)	1

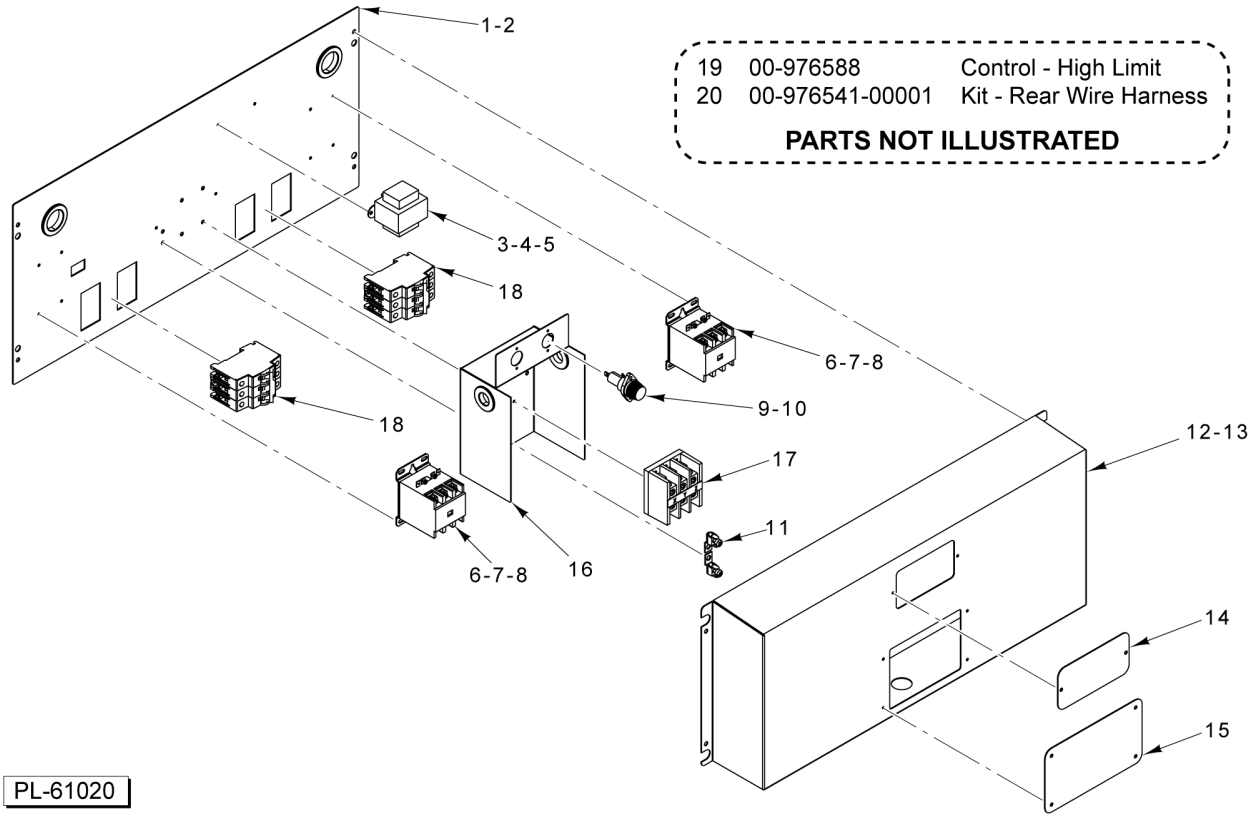

ELECTRICAL COMPONENTS

ELECTRICAL COMPONENTS

ILLUS. PL-61020	PART NO.	NAME OF PART	AMT.
1	00-944855-00018	Panel - Electrical (18 In.) (CEF40)	1
2	00-944855-00027	Panel - Electrical (27 In.) (CEF75)	1
3	00-411500-00013	Transformer (200-240 VAC, 24 V., 40 VA) (Before S/N 650200477)	1
4	00-976721-00014	Transformer (208 VAC, 24V., 40VA) (Starting S/N 650200477)	1
5	00-976721-00010	Transformer (240 VAC, 24 V., 40 VA) (Starting S/N 650200477)	1
6	00-945037-00050	Contactor - 50 Amp. DEF (CEF40)	2
7	00-945037-00063	Contactor - 63 Amp. DEF (CEF75)	2
8	00-411497-000C6	Contactor (3-Pole) (50 Amp., 120 V.) (480 V. Units)	1
9	00-960961-000G1	Holder - Fuse (15 Amp., 300 V.)	2
10	FE-019-40	Fuse (15 Amp., 600 V.)	2
11	00-417856-00001	Lug - Grounding (With Set Screw)	2
12	00-944854-00018	Cover - Electrical Panel (18 In.) (CEF40)	1
13	00-944854-00027	Cover - Electrical Panel (27 In.) (CEF75)	1
14	00-944855-00005	Cover - Fuse	1
15	00-944855-00004	Cover - Junction Block	1
16	00-944855-00002	Mount - Junction Block	1
17	00-410472-00008	Block - Terminal (3-Pole)	1
18	00-976610-00001	Breaker - Circuit (CEF75)	6
19	00-976588	Control - High Limit (No Capillary Wire) (Starting S/N 650200477)	1
20	00-976541-00001	Kit - Rear Wire Harness (Starting S/N 650200477)	1

17	00-976776-00001	Bracket - Terminal Block
18	00-976791-00001	Block - Terminal

PARTS NOT ILLUSTRATED

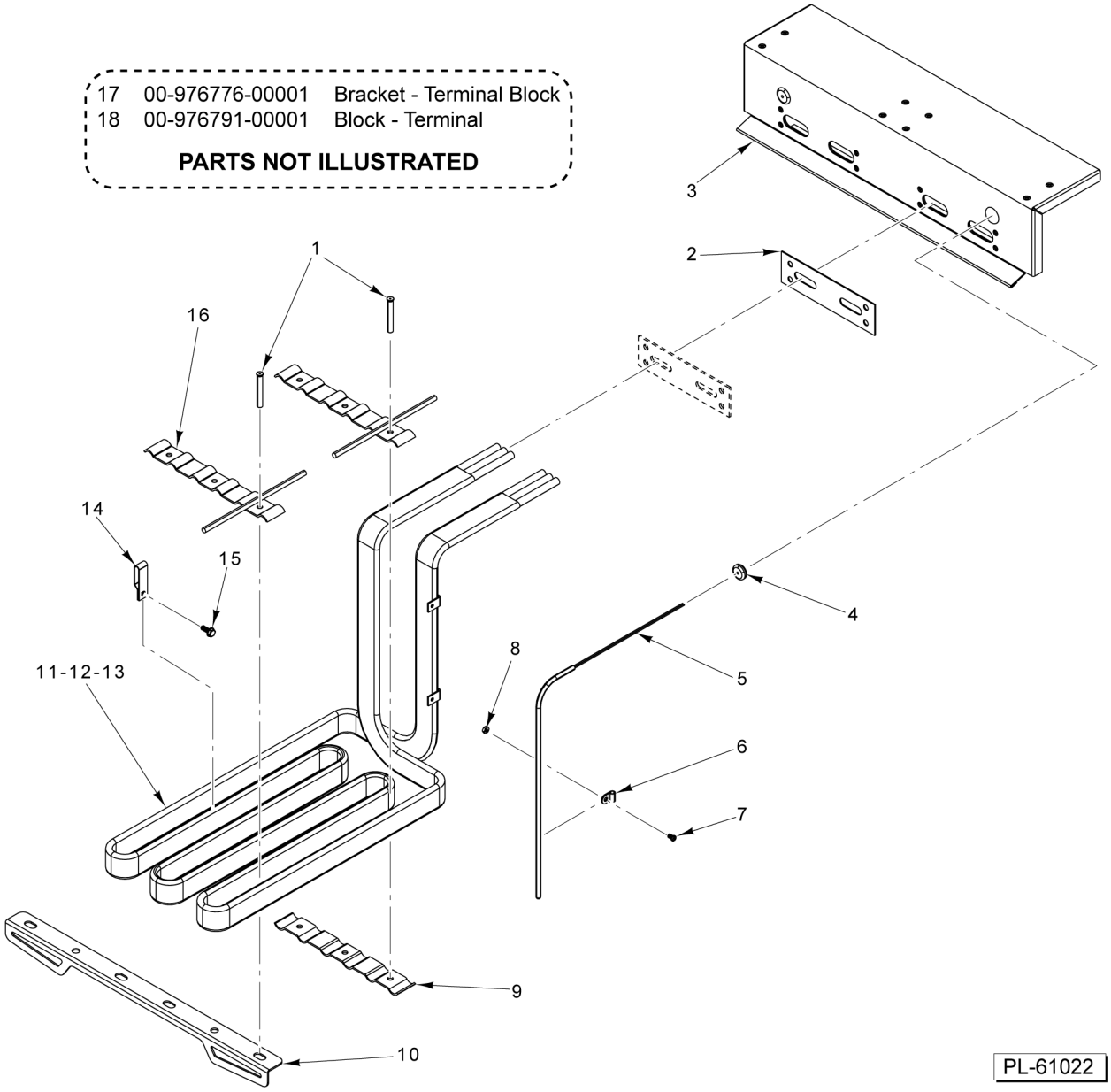

HEATING ELEMENTS (CEF40)

HEATING ELEMENTS (CEF40)

ILLUS. PL-61022	PART NO.	NAME OF PART	AMT.
1	SD-036-80	Self-Tapping Screw 8-32 x 3/8 Hex Washer Hd., Type TT	AR
2	00-416736-00001	Gasket - Element Flange	2
3	00-422322-000G1	Element Head Assy	1
4	00-410430-00001	Grommet - High Limit	2
5	00-422737-00002	Probe - Thermistor	1
6	00-419592-00001	Clip - Thermistor Probe	2
7	SC-060-23	Mach. Screw 4-40 x 1/4 Slotted Rd. Hd	2
8	NS-009-02	Nut 4-40 Hex	2
9	00-414177-00002	Clamp - Firebar	5
10	00-944985-00001	Clamp - Lower Firebar	1
11	00-416741-000G9	Element Assy. (208 V., 8500 kW)	2
12	00-416741-00G11	Element Assy. (240 V., 8500 kW)	2
13	00-416741-00G12	Element Assy. (480 V., 8500 kW)	2
14	00-416782-00001	Bracket - Hi-Limit	2
15	SD-032-07	Self-Tapping Screw 10-24 x 1/2 Hex Washer Hd., Type TT	2
16	00-414178-000G2	Clamp - Top Element Assy	5
17	00-976776-00001	Bracket - Terminal Block (Starting S/N 650200477)	1
18	00-976791-00001	Block - Terminal (Starting S/N 650200477)	1

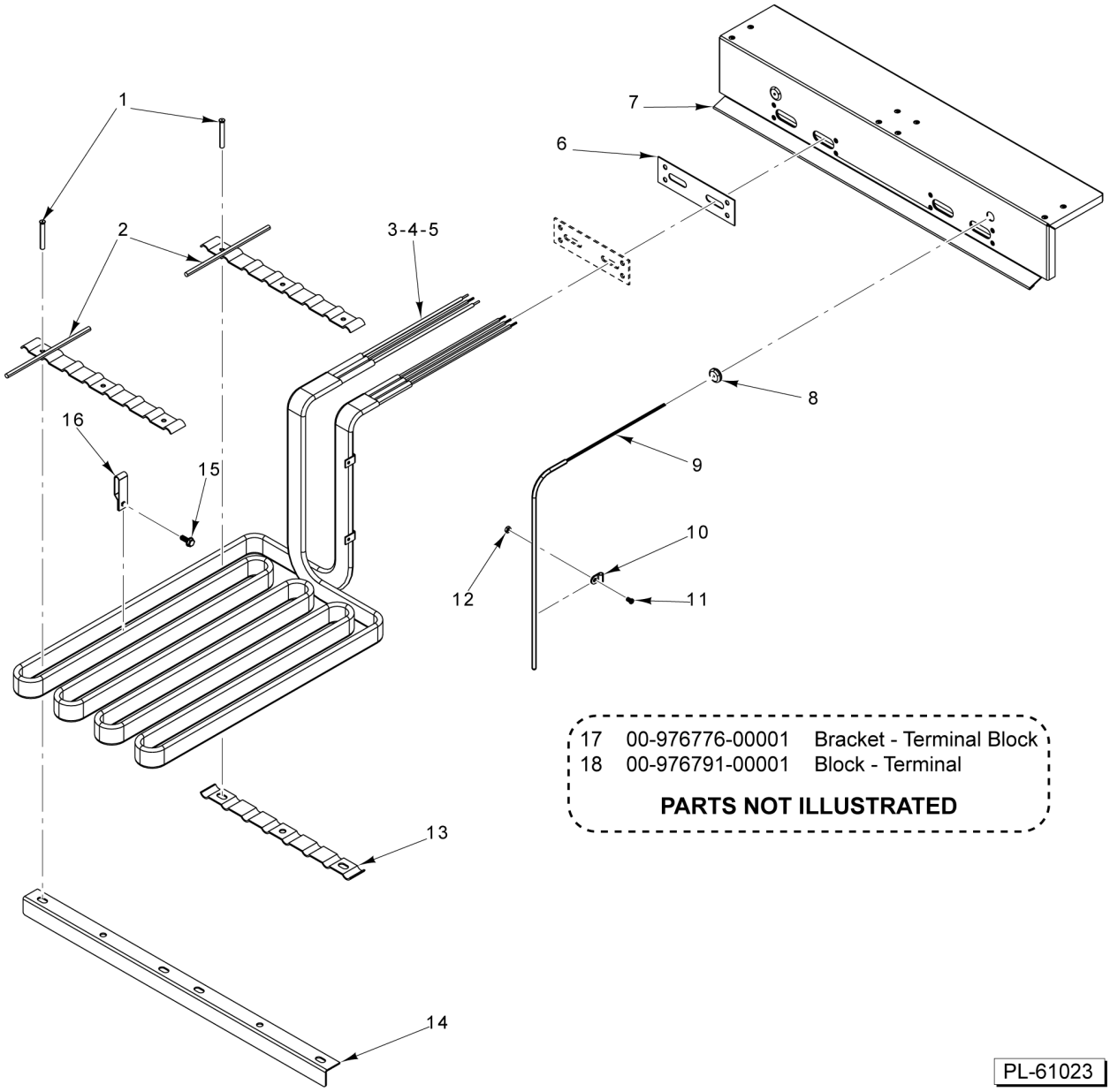

HEATING ELEMENTS (CEF75)

HEATING ELEMENTS (CEF75)

ILLUS. PL-61023	PART NO.	NAME OF PART	AMT.
1	SD-036-80	Self-Tapping Screw 8-32 x 3/8 Hex Washer Hd., Type TT	AR
2	00-422381-000G1	Clamp - Top Element Assy	5
3	00-421892-000G1	Element Assy. (208 V., 12000 W)	2
4	00-421892-000G3	Element Assy. (240 V., 12000 W)	2
5	00-421892-000G4	Element Assy. (480 V., 12000 W)	2
6	00-416736-00001	Gasket - Element Flange	2
7	00-421829-000G1	Element Head Assy	1
8	00-410430-00001	Grommet - High Limit	2
9	00-422737-00001	Probe - Thermistor	1
10	00-419592-00001	Clip - Thermistor Probe	2
11	SC-060-23	Mach. Screw 4-40 x 1/4 Slotted Rd. Hd	2
12	NS-009-02	Nut 4-40 Hex	2
13	00-422380-00001	Clamp - Rear Lower Element	3
14	00-422414-00001	Clamp - Front Lower Element	1
15	SD-032-07	Self-Tapping Screw 10-24 x 1/2 Hex Washer Hd., Type TT	2
16	00-416782-00001	Bracket - Hi-Limit	2
17	00-976776-00001	Bracket - Terminal Block (Starting S/N 650200477)	1
18	00-976791-00001	Block - Terminal (Starting S/N 650200477)	1

35	00-421756-00001	Brush - Fryer Cleaning
36	00-944959-00003	Adapter - Quick Disconnect
37	00-944959-00005	O-Ring
38	00-976588	Control - High Limit
39	00-976550-00040	Strip - Banking
40	00-976550-00075	Strip - Banking
41	00-976550-04075	Strip - Banking
42	00-976550-07540	Strip - Banking

PARTS NOT ILLUSTRATED

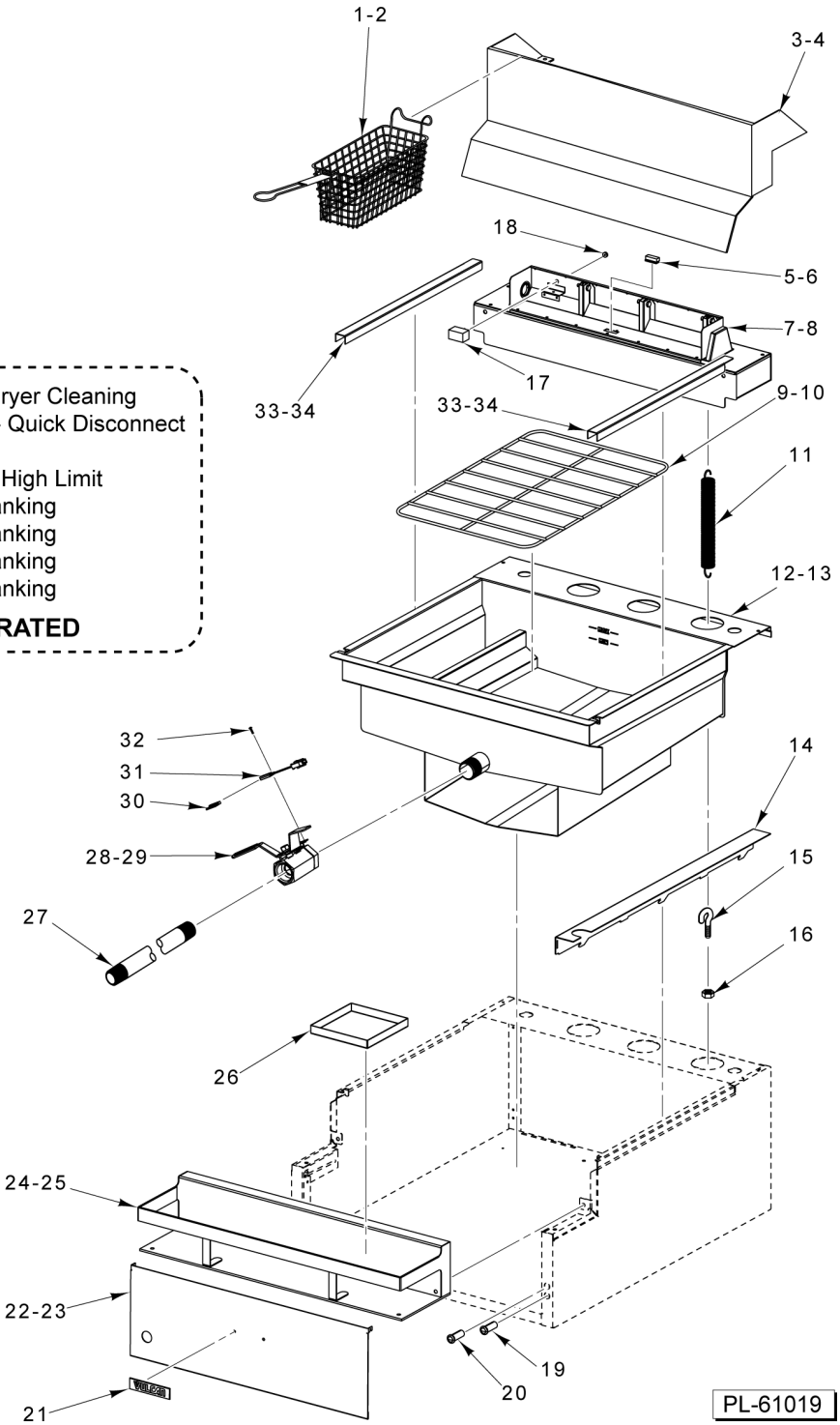

PANELS

PANELS

ILLUS. PL-61019	PART NO.	NAME OF PART	AMT.
1	00-499223-00001	Basket - Twin (CEF40)	1
2	00-499223-00004	Basket - Twin (CEF75)	2
3	00-421912-000G1	Hanger - Single Basket (CEF40)	1
4	00-944979-0000A	Hanger - Basket (CEF75)	1
5	00-426801-00001	Switch - Wired	1
6	00-426801-00002	Magnet - Switch Element Head	1
7	00-416315-000G1	Wire Chase Assy. (CEF40)	1
8	00-422415-000G1	Wire Chase Assy. (CEF75)	1
9	00-427883-00002	Screen - Basket Support (CEF40)	1
10	00-427883-00004	Screen - Basket Support (CEF75)	1
11	00-406363-00001	Spring - Door (Long)	AR
12	00-944790-0018A	Tank - Fryer (18 In.) (CEF40)	1
13	00-944790-0027A	Tank - Fryer (27 In.) (CEF75)	1
14	00-944894	Wireway	1
15	00-402570-00003	Eye Bolt	3
16	NS-047-69	Lock Nut 6-32 Hex	3
17	00-414146-00002	Thermostat Hi-Limit (Capillary Wire and Probe) (Before S/N 650200477)	1
18	00-413927-00001	Grommet - Rubber	1
19	00-945008-0000Y	Indicator Light - Yellow LED	1
20	00-945008-0000G	Indicator Light - Green LED	1
21	00-957916-00003	Nameplate - Small (Vulcan)	1
22	00-944956-0018A	Door - Fryer (18 In.) (CEF40)	1
23	00-944956-0027A	Door - Fryer (27 In.) (CEF75)	1
24	00-944955-0018A	Bullnose - Fryer (18 In.) (CEF40)	1
25	00-944955-0027A	Bullnose - Fryer (27 In.) (CEF75)	1
26	00-944897	Tray - Grease	1
27	00-976577-0000A	Drain Pipe Assy.	1
28	00-913111	Valve Assy. (Incls. Items 30 & 31) (Before S/N 650200477)	1
29	00-976656-00004	Valve Assy. (Incls. Items 30 & 31) (Starting S/N 650200477)	1
30	00-426801-00002	Magnet - Switch Element Head	1
31	00-426805-G1	DVI switch-wired	1
32	SC-018-55	Mach. Screw 4-40 x 1/2 Phil. Pan Hd	4
33	00-944892	Trim (CEF40)	1
34	00-976553	Trim (CEF75)	1
35	00-421756-00001	Brush - Fryer Cleaning	1
36	00-944959-00003	Adapter - Quick Disconnect	1
37	00-944959-00005	O-Ring	1
38	00-976588	Control - High Limit (No Capillary Wire) (Starting S/N 650200477)	AR
39	00-976550-00040	Strip - Banking (CEF40 to CEF40)	AR
40	00-976550-00075	Strip - Banking (CEF75 to CEF75)	AR
41	00-976550-04075	Strip - Banking (CEF40 On Left, CEF75 on Right)	AR
42	00-976550-07540	Strip - Banking (CEF75 On Left, CEF40 on Right)	AR