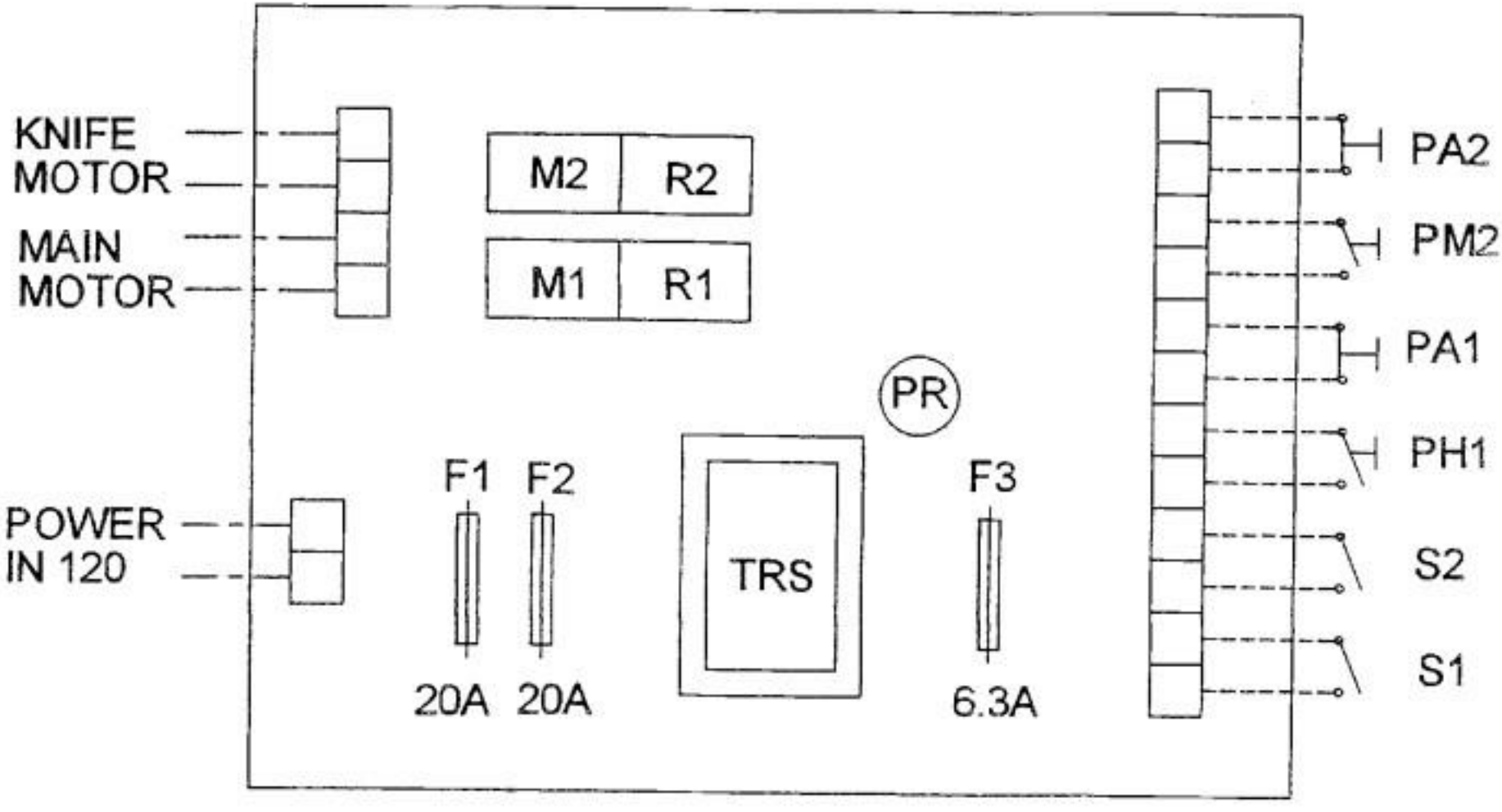
KNIFE MOTOR
MAIN MOTOR
POWER IN 120
M2
R2
M1
R1
PR
F1
F2
20A
20A
TRS
F3
6.3A
PA2
PM2
PA1
PH1
S2
S1

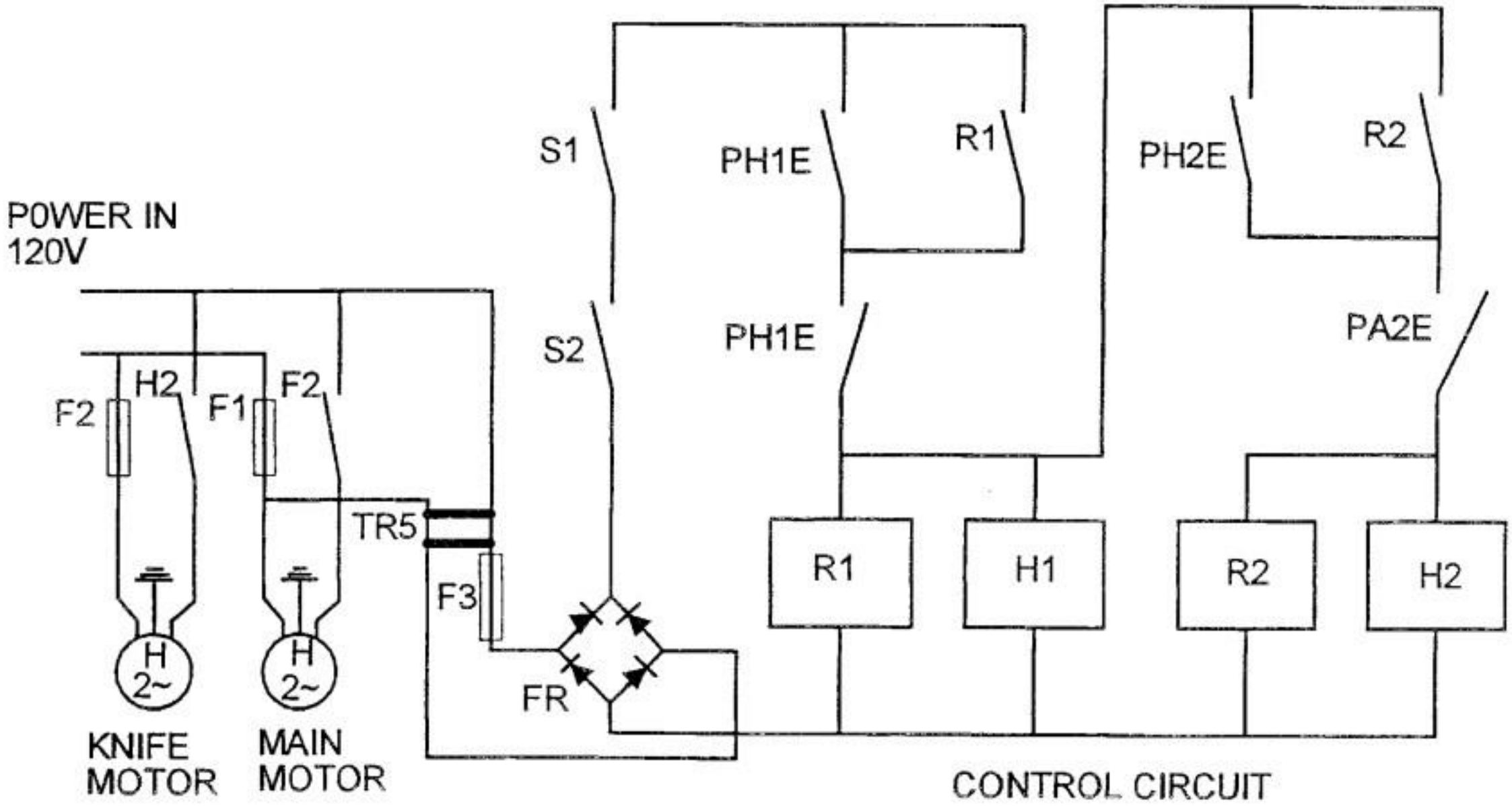
POWER IN
120V
S1
S2
PH1E
PH1E
R1
PH2E
R2
PA2E
F2
H2
F1
F2
TR5
F3
FR
R1
H1
R2
H2
H
2~
H
2~
KNIFE
MOTOR
MAIN
MOTOR
CONTROL CIRCUIT

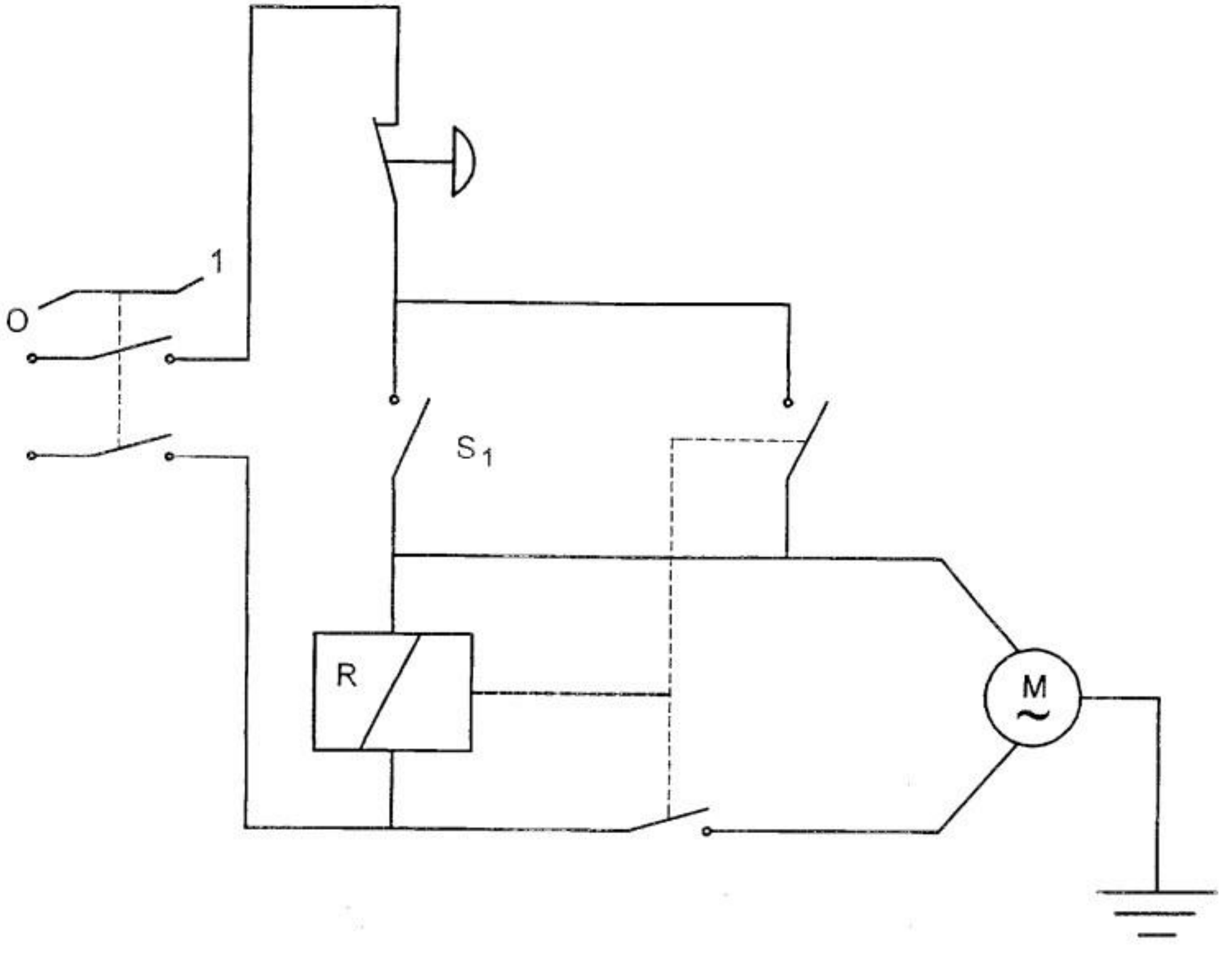
1
O
S1
R
M
~