QUICK START GUIDE



BrightShield™ Collection

30683 Rev_E

WELCOME TO U-LINE

Congratulations on your U-Line purchase. Your product comes from a company with over five decades of premium modular ice making, refrigeration, and wine preservation experience. U-Line continues to be the American leader, delivering versatility and flexibility for multiple applications including residential, light commercial, outdoor and marine use. U-Line's complete product collection includes Wine Captain® Models, Beverage Centers, Clear Ice Machines, Nugget Ice Machines, Crescent Ice Makers, Glass & Solid Door Refrigerators, Drawer Models, Freezers, Combo® Models, and more.

U-Line has captivated those with an appreciation for the finer things with exceptional functionality, style, inspired innovations, and attention to even the smallest details. We are known and respected for our unwavering dedication to product design, quality, and selection. U-Line is headquartered in Milwaukee, Wisconsin, and has shipped product to five continents for over two decades and is proud to have the opportunity to ship to you.

U-LINE — RIGHT PRODUCT. RIGHT PLACE. RIGHT TEMPERATURE®

PRODUCT INFORMATION

IMPORTANT - Before connecting your new Nugget Ice Machine, be sure to carefully follow all manufacturer recomendations throughout this guide regarding water quality. Please see WATER HOOKUP section for more information.

Looking for additional information on your product? User Guides, Spec Sheets, CAD Drawings, Compliance Documentation, and Product Warranty information are all available for reference and download at u-line.com.

PROPERTY DAMAGE / INJURY CONCERNS

In the unlikely event property damage or personal injury is suspected related to a U-Line product, please take the following steps:

1. U-Line Customer Care must be contacted immediately at +1.414.354.0300.
2. Service or repairs performed on the unit without prior written approval from U-Line is not permitted. If the unit has been altered or repaired in the field without prior written approval from U-Line, claims will not be eligible.

GENERAL INQUIRIES

U-Line Corporation
8900 N. 55th Street
Milwaukee, Wisconsin 53223 USA
Monday - Friday 8:00 am to 4:30 pm CST
T: +1.414.354.0300
Email: sales@u-line.com
u-line.com

CONNECT WITH US

QUICK START GUIDE

This Quick Start Guide covers the basics of installation and general use of your product.

CONTENTS

Safety and Warning	4
Environmental Requirements	5
Electrical	5
Water Hookup - Clear Ice	6
Drain	7
Door Swing	8
Door Adjustments	10
General Installation	16
Anti-Tip Bracket	16
Integrated Panel Installation	18
Control Operation	19
BrightShield™ Information	23
First Use	23
Airflow & Product Loading	24
Interior Adjustments	25
Ice	26
Cleaning	28
Warranty	33

For more details, see the complete User Guide & Service Manual on u-line.com.

This product is eligible for an additional one-year warranty at no charge when you register your product on u-line.com. See complete warranty for details.

Safety and Warning

NOTICE
Please read all instructions before installing, operating, or servicing the appliance.

Use this appliance for its intended purpose only and follow these general precautions with those listed throughout this guide:

SAFETY ALERT DEFINITIONS

Throughout this guide are safety items labeled with a Danger, Warning, or Caution based on the risk type:

⚠ DANGER

Danger means that failure to follow this safety statement will result in severe personal injury or death.

⚠ WARNING

Warning means that failure to follow this safety statement could result in serious personal injury or death.

⚠ CAUTION

Caution means that failure to follow this safety statement may result in minor or moderate personal injury, property, or equipment damage.

⚠ DANGER

This unit contains R600a (Isobutane) which is a flammable hydrocarbon. It is safe for regular use. Do not use sharp objects to expedite defrosting. Do not service without consulting the "R600a specifications" section included in the User Guide. Do not damage the refrigerant circuit.

⚠ WARNING

Service must be done by factory authorized service personnel. Any parts shall be replaced with like components. Failure to comply could increase the risk of possible ignition due to incorrect parts or improper service.

CALIFORNIA PROPOSITION 65

This product contains chemicals known to the state of California to cause cancer and birth defects or other reproductive harm.

www.P65warnings.CA.gov

⚠ CAUTION

This equipment is to be installed with adequate backflow protection to comply with applicable federal, state and local codes.

Environmental Requirements

This model is intended for indoor/interior applications only and is not to be used in installations that are open/exposed to natural elements.

This unit is designed to operate between 50°F (10°C) and 100°F (38°C). Higher ambient temperatures may reduce the unit's ability to reach low temperatures and/or reduce ice production on applicable models.

For best performance, keep the unit out of direct sunlight and away from heat generating equipment.

In climates where high humidity and dew points are present, condensation may appear on outside surfaces. This is considered normal. The condensation will evaporate when the humidity drops.

⚠ CAUTION

Damages caused by ambient temperatures of 40°F (4°C) or below are not covered by the warranty.

Electrical

⚠ WARNING

SHOCK HAZARD - Electrical Groundining Required. Never attempt to repair or perform maintenance on the unit until the electricity has been disconnected.

Never remove the round grounding prong from the plug and never use a two-prong grounding adapter.

Altering, cutting or removing power cord, removing power plug, or direct wiring can cause serious injury, fire, loss of property and/or life, and will void the warranty.

Never use an extension cord to connect power to the unit.

Always keep your working area dry.

NOTICE

Electrical installation must observe all state and local codes. This unit requires connection to a grounded (three-prong), polarized receptacle that has been placed by a qualified electrician.

The unit requires a grounded and polarized 115 VAC,

60 Hz, 15A power supply (normal household current). An individual, properly grounded branch circuit or circuit breaker is recommended. A GFCI (ground fault circuit interrupter) is usually not required for fixed location appliances and is not recommended for your unit because it could be prone to nuisance tripping. However, be sure to consult your local codes.

See CUTOUT & PRODUCT DIMENSIONS for recommended receptacle location.

Water Hookup

CLEAR ICE MACHINES

⚠ CAUTION

Turn off water supply and disconnect electrical supply to unit prior to installation.
Use caution when handling back panel. The edges could be sharp.

1. Turn off water supply and disconnect electrical supply to product prior to attempting installation.
2. Remove the grille/access panel in the front and the back panel.
3. Locate water valve in the front of the unit and thread water supply line through.

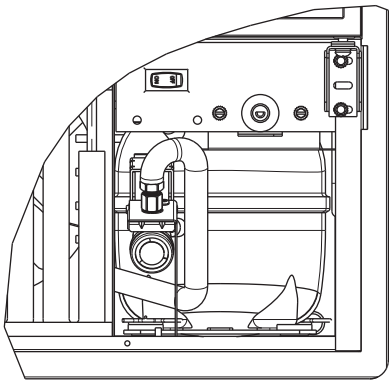

NOTICE

Route the water supply line through the unit so it does not come into contact with any internal components other than the solenoid valve. Normal operation creates some vibration. A water supply line contacting an internal component or cabinet wall can cause excessive noise during operation or damage to the line.

4. On the back panel, break away filler feature in bushing with a flat screwdriver.

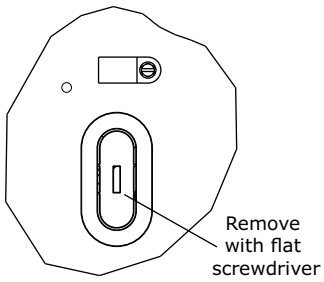

5. Thread water line through back panel hole (with bushing) and connect to cold water supply line.

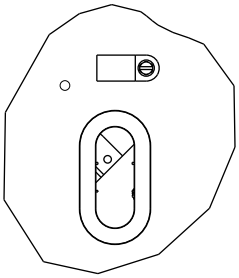

6. Turn on water supply and check for leaks.
7. Reinstall back panel and grille/front access panel.
8. Install retaining clip.

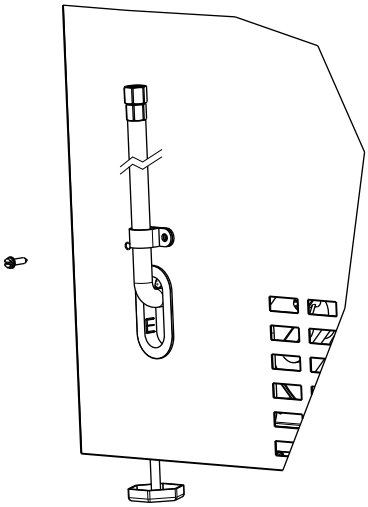

Drain

DRAIN CONNECTION

⚠ CAUTION

The floor drain must be large enough to accommodate drainage from all attached drains. Follow these guidelines when installing drain lines to prevent water from flowing back into the ice maker storage bin and/or potentially flowing onto the floor, which may result in personal injury or property damage

NOTICE

Drain can NOT be located directly below the unit. Unit has a solid base that will not allow the unit to drain below itself.

There is a possibility that hose connections may have loosened during shipment.

Verify all connections and fittings are free from leaks.

⚠ CAUTION

This equipment is to be installed with adequate backflow protection to comply with applicable federal, state and local codes

⚠ CAUTION

Failure to connect water supply or drain line connections properly can result in personal injury and property damage. Gravity drain connections must be routed downward from the rest of the unit at the rate of 1/4” per foot (1 cm per 50 cm).

FACTORY INSTALLED DRAIN PUMP

If your drain line will run up to a stand pipe, disposal or spigot assembly, or does not otherwise meet the requirements for a gravity drain, you may have ordered a pre-installed U-Line drain pump.

If you need to install a drain pump into your unit, see DRAIN PUMP section in the User Manual.

See below for typical installations requiring a drain pump.

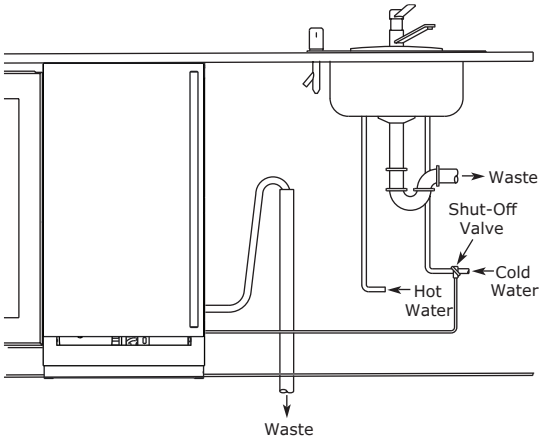

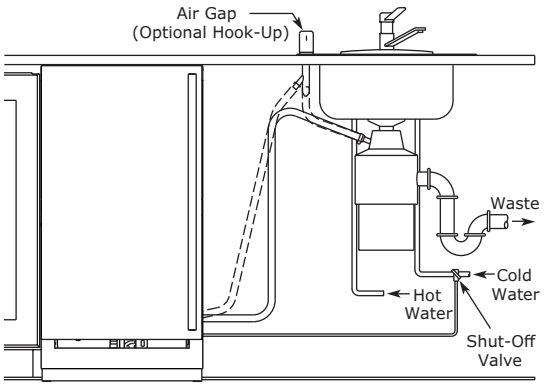

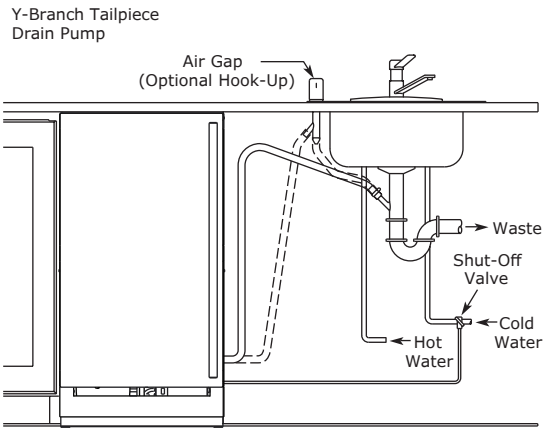

NOTICE

The maximum lift for the P60 drain pump is 10 feet. This must be done as close to the rear of the unit as possible.

Door Swing

UNITS WITH TOP MOUNTED HINGES

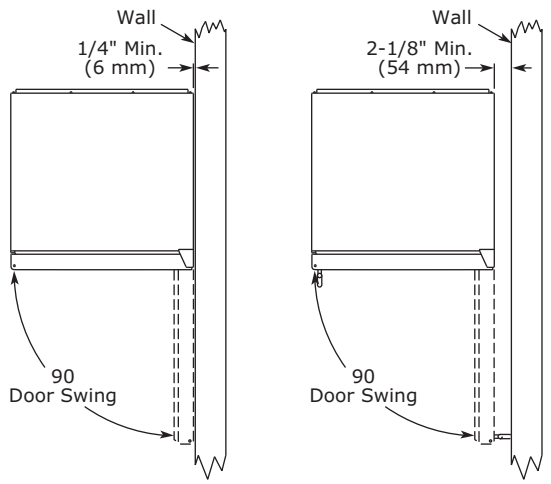

Units have a zero clearance for the door to open 90°, when installed adjacent to cabinets.

Stainless Steel and black and white models require 2-1/8" (54 mm) door clearance to accommodate the handle if installed next to a wall.

Integrated models require 1/4" (6 mm) clearance if installed next to a wall. Allow for additional space for any knobs or pulls installed on the integrated panel/frame.

UNITS WITH FRONT MOUNTED HINGES

For Integrated models that are installed adjacent to a wall, 1/2" (13 mm) clearance is recommended from wall on hinge side to allow the door to open 90°. Allow for additional space for any knobs or pulls installed on the integrated panel/frame.

Stainless Steel models that are installed adjacent to a wall require 2-1/4" (57 mm) door clearance on hinge side to allow for door handle.

Units have a zero clearance when installed adjacent to cabinets.

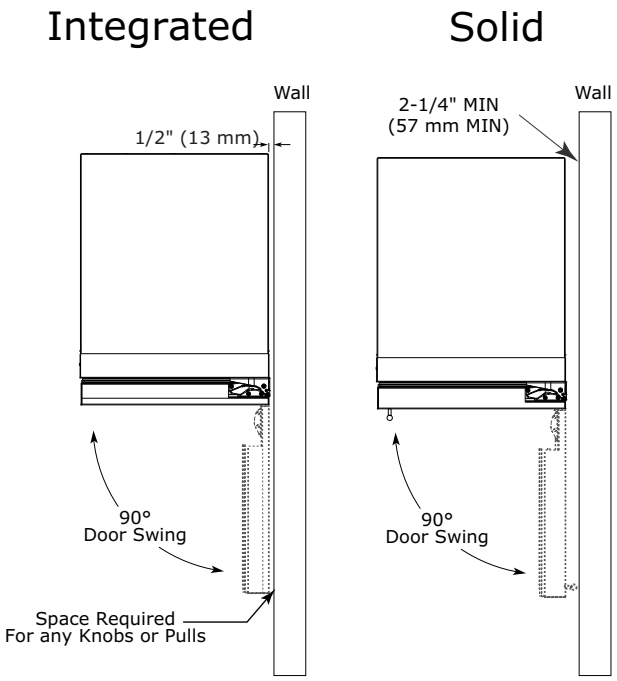

Door Adjustments

1 CLASS NONINTEGRATED REFRIGERATORS

HINGE COVER

Hinge cover included with the literature bag is optional.

To install hinge cover:

1. Press hinge cover squarely over hinge.

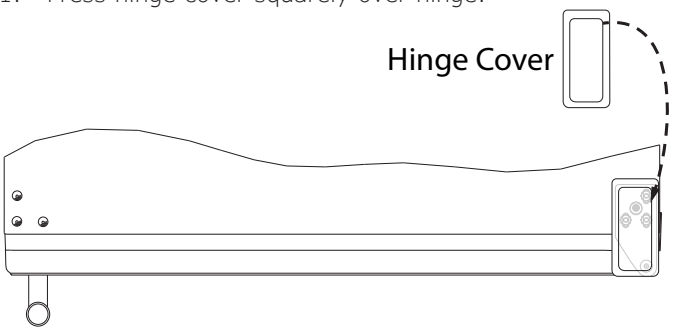

DOOR ALIGNMENT AND ADJUSTMENT

Align and adjust the door if it is not level or is not sealing properly. If the door is not sealed, the unit may not cool properly, or excessive frost may form in the interior.

NOTICE
Properly aligned, the door's gasket should be firmly in contact with the cabinet all the way around the door (no gaps). Carefully examine the door's gasket to ensure that it is firmly in contact with the cabinet. Also make sure the door gasket is not pinched on the hinge side of the door.

To align and adjust the door:

1. Gently pry off hinge cover from top of unit.
2. Loosen (do not remove) top and bottom hinge screws using a Torx T-25 screwdriver.
3. Align door squarely with cabinet.
4. Make sure gasket is firmly in contact with cabinet all the way around the door (no gaps).
5. Tighten bottom hinge screws.
6. Tighten top hinge screws and replace hinge cover.

REVERSING THE DOOR

Location of the unit may make it desirable to mount the door on the opposite side of the cabinet.

The hinge hardware will be removed and reinstalled on the opposite side of the cabinet.

TO REVERSE THE DOOR

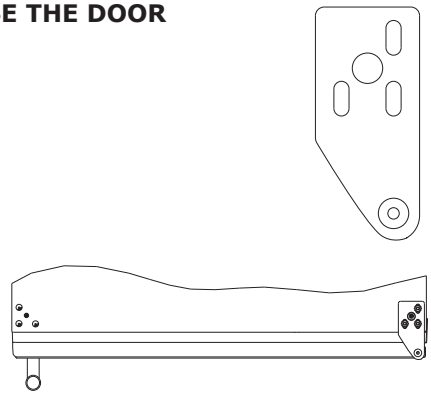

Remove arrow clips:

1. With a puddy knife or other flat tool, gently pry each arrow clip from hinge mounting holes.
2. Set aside arrow clips to be reused on the opposite side.

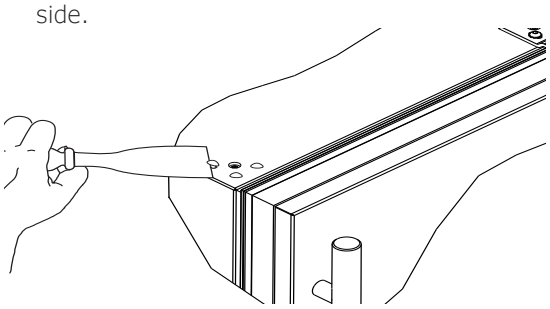

Remove grille:

Remove the grille (see GRILLE INSTALLATION section of this guide).

Remove top hinge and door:

1. Hold door to keep it from falling.
2. Remove top hinge from cabinet using a Torx T-25 screwdriver to remove three screws. Set aside and save for possible future use.

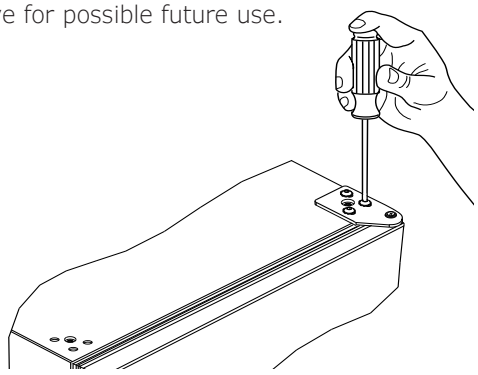

3. Remove door by tilting forward and lifting door off bottom hinge. Retain shoulder washers; they will be reused.
4. Insert arrow clips into holes

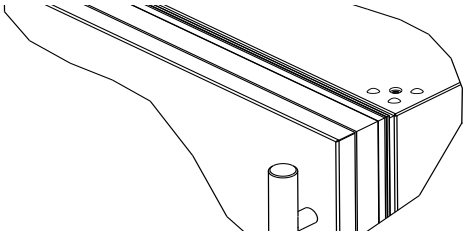

Remove bottom hinge:

1. Remove bottom hinge from cabinet using a T-25 TORX screw driver to remove three screws.

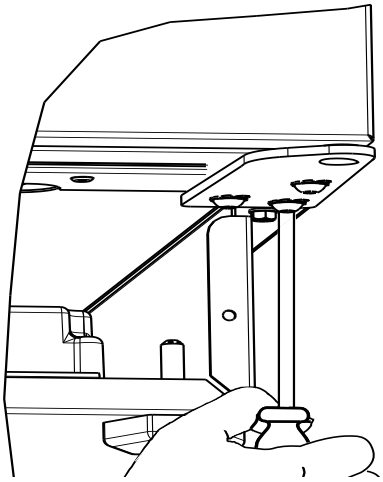

2. Remove corresponding screws on opposite side of cabinet. On some models there may be a nut behind one or both screws on either side.

Install bottom hinge:

Install two or three screws, depending on model. Replace nuts if used.

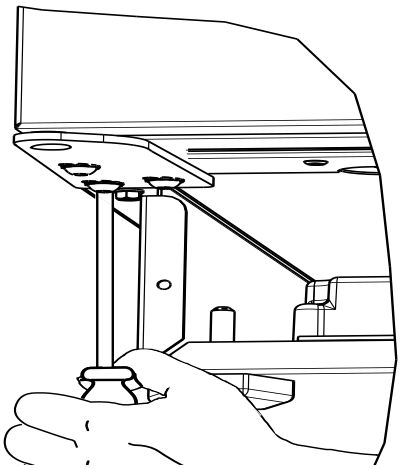

Note: When reversing the door, it is necessary to remove and switch the shelf-mounting hardware. This will allow the shelf to extend out of the unit beyond the door.

Remove bottom shelf:

1. Pull out shelf as far as it will go.
2. Locate the tabs inside the right and left shelf slides.
3. Push down on the tab on the right and pull slightly on the shelf to allow it to pass beyond the lock.
4. While holding the shelf so it does not re-lock on the right, lift up on the left-side tab, and pull the shelf toward you until it is completely free from the unit.

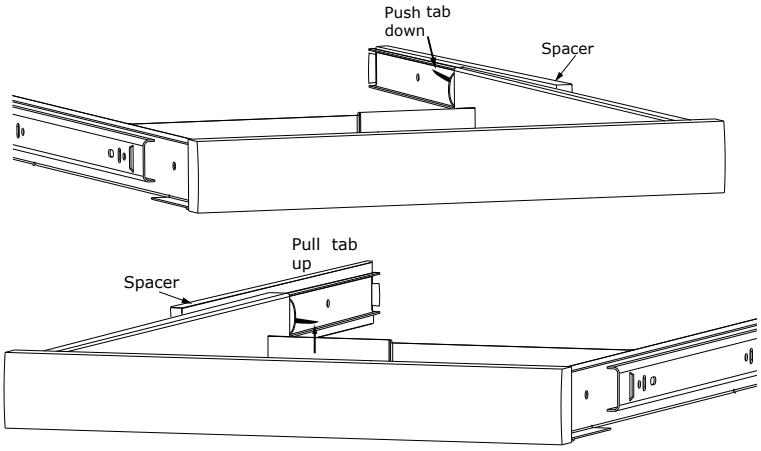

Install slide spacers on opposite sidewalls:

1. Take out 4 screws and remove the two brackets and spacers from the sidewalls of the unit - leave the screws in the brackets and spacers to keep them together.
2. Using 4 screws, install the spacers and brackets on the opposite sidewalls - the open ends of the brackets need to remain toward the front of the unit.

Note: Be sure that the hinge side of the unit has the slide bracket with the thicker spacer.

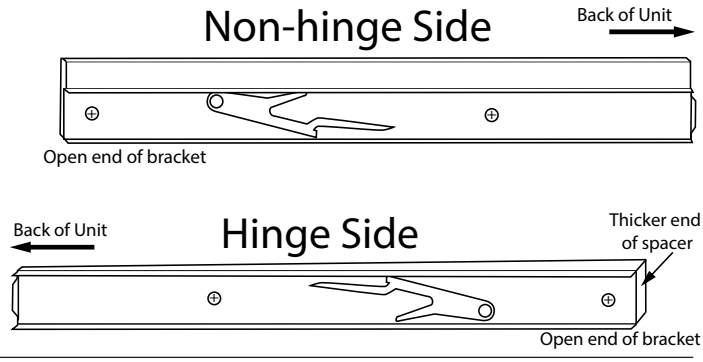

3. Line up shelf slide with slide brackets and push shelf in all the way. Pull shelf outward all the way to make sure locks are engaged.

Install top hinge and door:

1. Install hinge with longer straight edge aligned to outside edge of cabinet. Do not tighten.

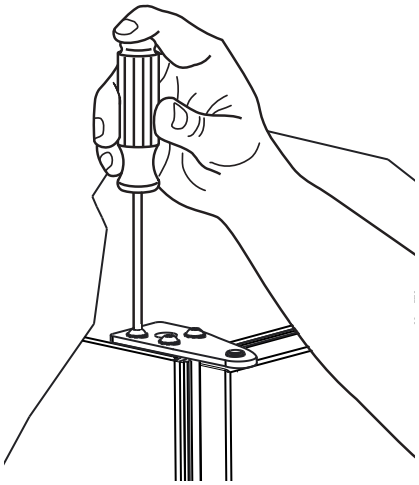

2. Rotate door 180° and set on bottom hinge.
3. Align edge of the hinge with the outer edge of the unit.
4. Tighten three hinge screws.

Align and adjust the door:
Align and adjust the door (see DOOR ALIGNMENT AND ADJUSTMENT)
Install grille and hinge cover

Door Adjustments

1 CLASS INTEGRATED DOOR REFRIGERATOR

DOOR ALIGNMENT AND ADJUSTMENT

Align and adjust the door if it is not level or is not sealing properly. If the door is not sealed, the unit may not cool properly, or excessive frost may form in the interior.

NOTICE

Properly aligned, the door's gasket should be firmly in contact with the cabinet all the way around the door (no gaps). Carefully examine the door's gasket to ensure that it is firmly in contact with the cabinet. Also make sure the door gasket is not pinched on the hinge side of the door.

To align and adjust the door:

1. Loosen (do not remove) top and bottom hinge screws.
2. Align door squarely with cabinet.
3. Make sure gasket is firmly in contact with cabinet all the way around the door (no gaps).
4. Tighten bottom hinge screws.
5. Tighten top hinge screws.

REVERSING THE DOOR

Location of the unit may make it desirable to mount the door on the opposite side of the cabinet.

The lower hinge and hardware will be removed and installed on the opposite side of the cabinet. The upper hinge will be replaced with the alternate hinge supplied with the unit.

TO REVERSE THE DOOR

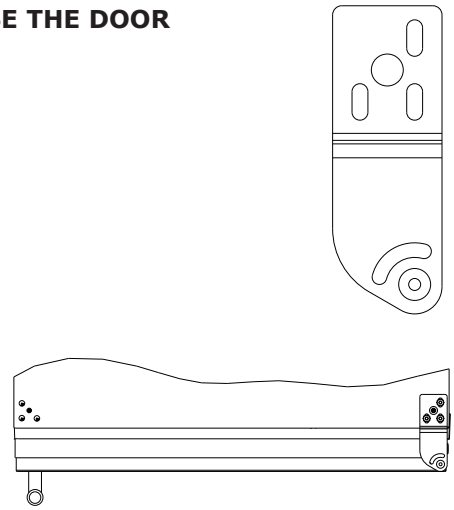

Remove arrow clips:

1. With a puddy knife or other flat tool, gently pry each arrow clip from hinge mounting holes.
2. Set aside arrow clips to be reused on the opposite side.

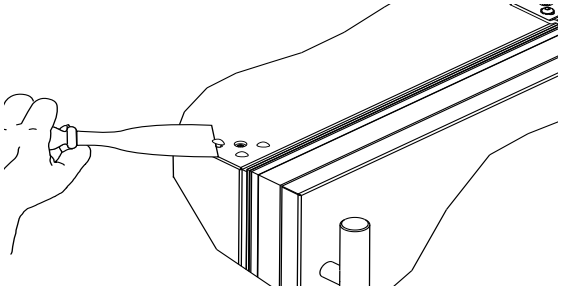

Remove top hinge and door:

1. Hold door to keep it from falling.
2. Remove top hinge from cabinet using a Torx T-25 screwdriver to remove three screws.

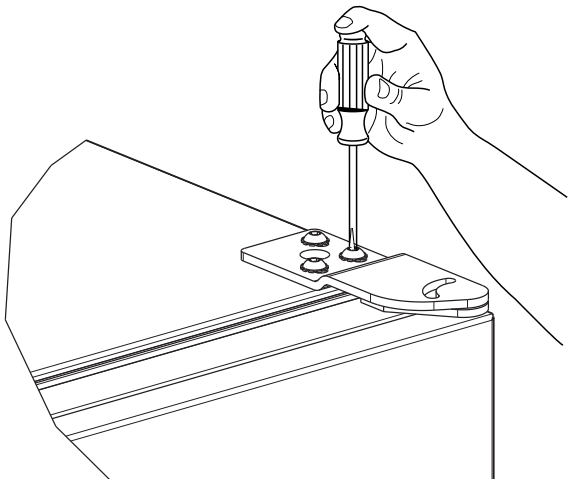

3. Remove door by tilting forward and lifting door off bottom hinge. Retain shoulder washers; they will be reused.
4. Insert arrow clips into holes.

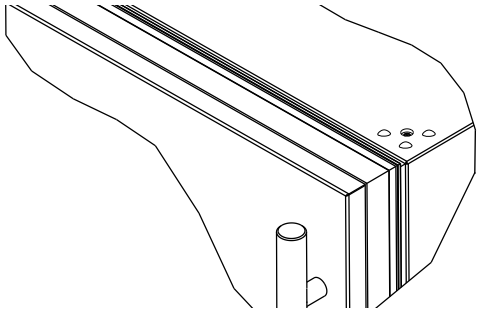

Remove bottom hinge:

1. Remove bottom hinge from cabinet using a T-25 TORX screw driver to remove three screws.

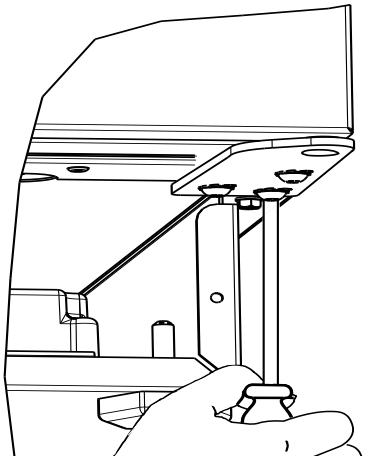

2. Remove corresponding screws on opposite side of cabinet. On some models there may be a nut behind one or both screws on either side.

Install bottom hinge:

Install two or three screws, depending on model. Replace nuts if used.

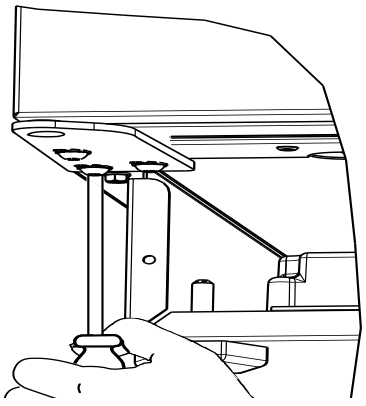

Install top hinge and door:

1. Use alternate hinge supplied with unit and reinstall the screws. Do not tighten.

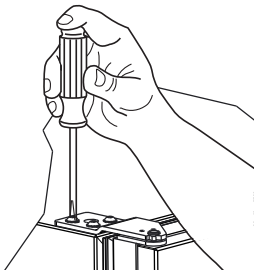

2. Rotate the door 180^0 and lift the door on to the bottom hinge.
3. Align flat edge of the top hinge with the outer edge of the unit.
4. Tighten three screws.

Align and adjust the door:

Align and adjust the door (see DOOR ALIGNMENT AND ADJUSTMENT).

Install grille:

Install the grille.

Door Adjustments

5 CLASS REFRIGERATOR & NUGGET ICE MACHINE

DOOR ALIGNMENT AND ADJUSTMENT

Align and adjust the door if it is not level or not sealing properly. If the door is not sealed, the unit may not cool properly, or excessive frost or condensation may form in the interior.

NOTICE

Properly aligned, the door's gasket should be firmly in contact with the cabinet all the way around the door (no gaps). Carefully examine the door's gasket to ensure that it is firmly in contact with the cabinet. Also make sure the door gasket is not pinched on the hinge side of the door.

⚠ CAUTION

Do not attempt to use the door to raise or pivot your unit. This would put excessive stress on the hinge system.

Alignment and Adjustment Procedure

1. Open door and remove gasket near the hinges.
2. Using a T-25 Torx bit, loosen each pair of Torx head screws both the upper and lower hinge plates.
3. Square and align door as necessary.
4. Tighten Torx head screws on hinge.
5. Reinstall gasket into the channel starting at the corner.

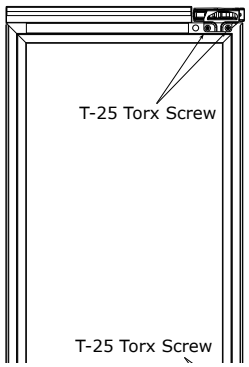

REVERSING THE DOOR

1. Open door.
2. Using T-25 Torx bit loosen screw #1 and remove screw #2 on top and bottom hinge. Slide and remove the door from the unit.

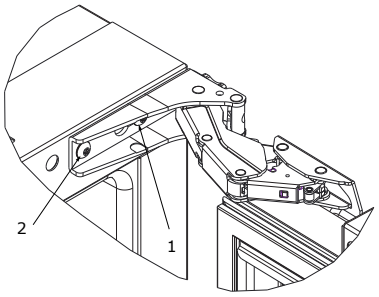

Note: One hinge includes a metal spacer. Spacer must be used with that hinge when reversing the door.

3. Remove caps from screw heads on opposite side (2 on top and 2 on bottom). Using #2 Phillips bit, remove the 4 underlying screws. Reinstall the screws and caps on the opposite side.
4. Partially install screw #1 in the outer most holes on top and bottom. Rotate door 180o, align hinge over screw #1 and slide/seat into position. Reinstall screw #2 on top and bottom. Tighten both screws and install hinge cover.

Align and adjust the door:

Align and adjust the door (see DOOR ALIGNMENT AND ADJUSTMENT).

Door Adjustments

CLEAR ICE MACHINE

HINGE COVER

Hinge cover included with the literature bag is optional.

To install hinge cover:

1. Press hinge cover squarely over hinge.

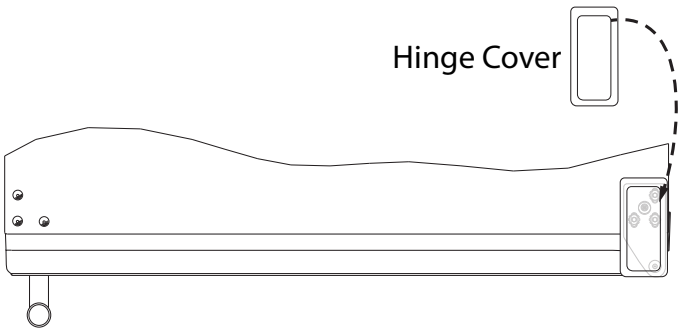

DOOR ALIGNMENT AND ADJUSTMENT

Align and adjust the door if it is not level or is not sealing properly. If the door is not sealed, the unit may not cool properly, or excessive frost may form in the interior.

NOTICE

Properly aligned, the door's gasket should be firmly in contact with the cabinet all the way around the door (no gaps). Carefully examine the door's gasket to ensure that it is firmly in contact with the cabinet. Also make sure the door gasket is not pinched on the hinge side of the door.

To align and adjust the door:

1. Gently pry off hinge cover from top of unit.
2. Loosen (do not remove) top and bottom hinge screws using a Torx T-25 screwdriver on the top and a 1/4" socket on the bottom.
3. Align door squarely with cabinet.
4. Make sure gasket is firmly in contact with cabinet all the way around the door (no gaps).
5. Tighten bottom hinge screws.
6. Tighten top hinge screws and replace hinge cover.

REVERSING THE DOOR

Location of the unit may make it desirable to mount the door on the opposite side of the cabinet.

The hinge hardware will be removed and reinstalled on the opposite side of the cabinet.

TO REVERSE THE DOOR

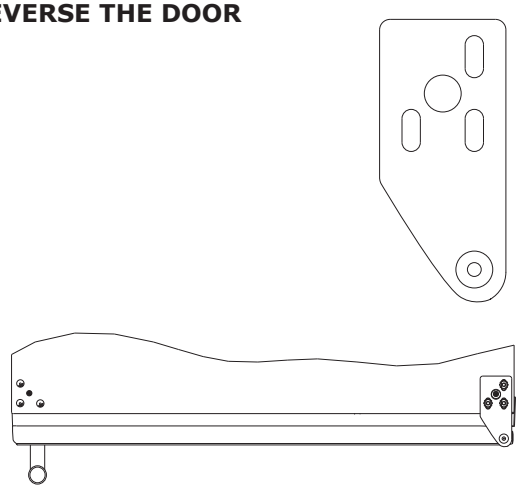

Remove arrow clips:

1. With a putty knife or other flat tool, gently pry each arrow clip from hinge mounting holes.
2. Set aside arrow clips to be reused on the opposite side.

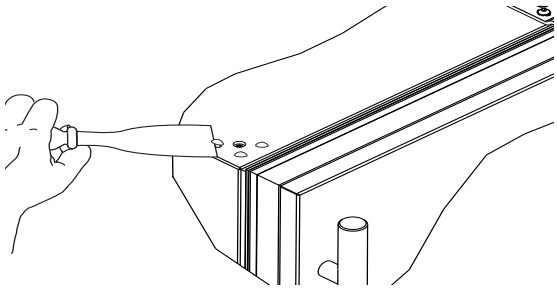

Remove top hinge and door:

1. Remove hinge cover from top of unit
2. Hold door to keep it from falling.
3. Remove top hinge from cabinet using a Torx T-25 screwdriver to remove three screws.

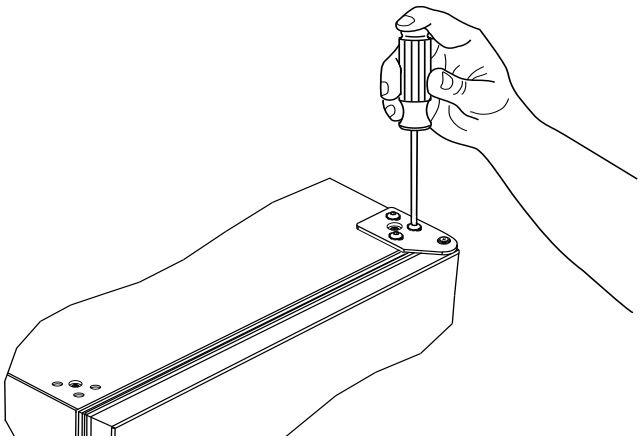

4. Remove door by tilting forward and lifting door off bottom hinge. Retain shoulder washers; they will be reused.
5. Insert arrow clips into holes

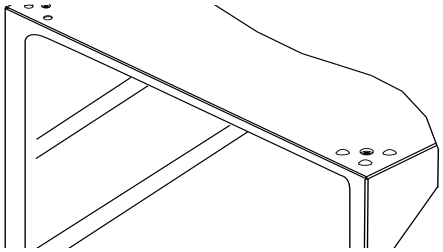

Remove bottom hinge:

1. Remove bottom hinge from cabinet using a 1/4" socket.

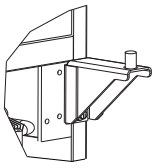

2. Remove corresponding screws on opposite side of cabinet. On some models there may be a nut behind one or both screws on either side.

Install bottom hinge:

Install two or three screws, depending on model. Replace nuts if used.

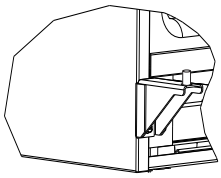

PREPARE DOOR FOR REINSTALLATION

Rotate gasket

1. With a flat tool, such as a putty knife, gently pry up beneath the gasket and spacer until completely free from the door surface.
2. Continue removing the gasket by grabbing hold and gently pulling outward, exposing the gasket channel.
3. Remove the 3 pieces of gasket channel filler and reinstall on the opposite end of door.

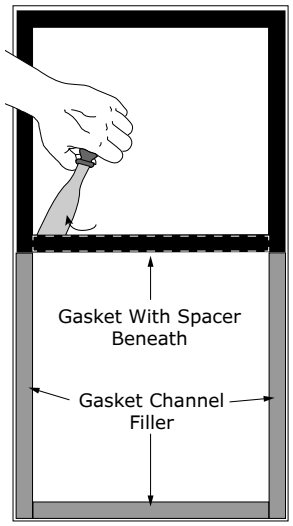

4. Install gasket into channel, beginning at one corner and pressing in firmly.
5. Press down on middle horizontal portion of gasket until it adheres to the door surface.

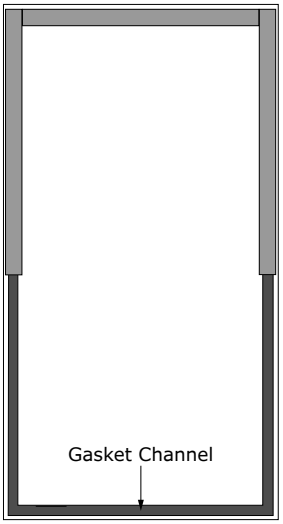

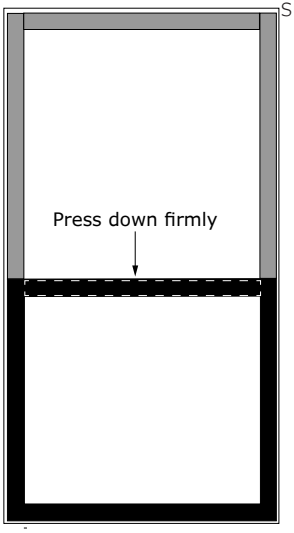

Note: It may be necessary to apply a strip of two-sided tape for a firm adhesion.

Install top hinge and door:

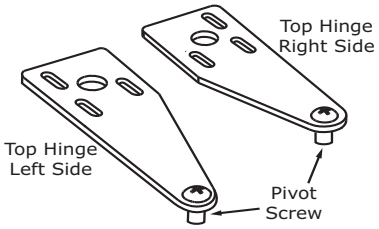

1. Remove pivot screw from hinge, flip hinge over, and install the pivot screw in the same hole from the opposite surface.

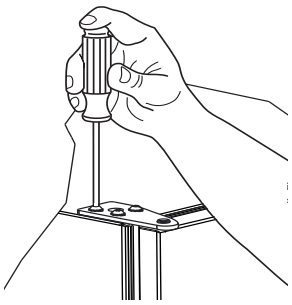

2. Lift the door onto the bottom hinge.
3. Align edge of the hinge with the outer edge of the unit.
4. Tighten three screws and replace hinge cover.
5. Replace hinge cover.

Align and adjust the door:

Align and adjust the door (see DOOR ALIGNMENT AND ADJUSTMENT)

General Installation

LEVELING INFORMATION

1. Use a level to confirm the unit is level. Level should be placed along top edge and side edge as shown.

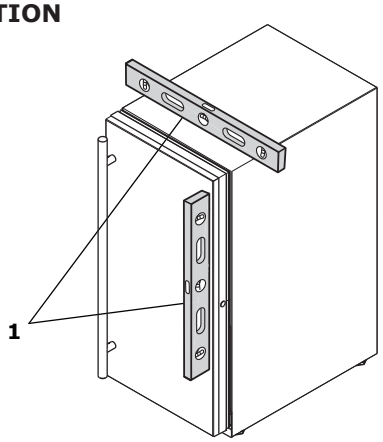

2. If the unit is not level, adjust the legs on the corners of the unit as necessary.

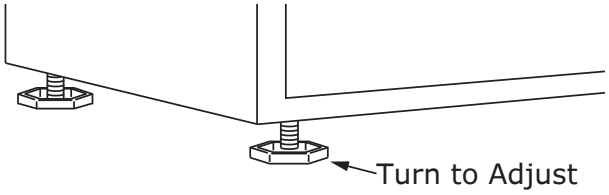

3. Confirm the unit is level after each adjustment and repeat the previous steps as needed.

INSTALLATION TIP

If the room floor is higher than the floor in the cutout opening, adjust the rear legs to achieve a total unit rear height of ⅛" (3 mm) less than opening's rear height. Shorten the unit height in the front by adjusting the front legs. This allows the unit to be gently tipped into the opening. Readjust the front legs to level the unit after it is correctly positioned in the opening.

INSTALLATION

1. Plug in the power/electrical cord.
2. Gently push the unit into position. Be careful not to entangle the cord or water and drain lines, if applicable.
3. Re-check the leveling, from front to back and side to side. Make any necessary adjustments. The unit's top surface should be approximately ⅛" (3 mm) below the countertop.
4. Install the anti-tip bracket.
5. Remove interior packing material and wipe out the inside of the unit with a clean, water-dampened cloth.

Anti-Tip Bracket

UNITS WITH TOP-MOUNTED DOOR HINGES

1. Slide unit out so screws on top of unit are easily accessible.
2. Remove the two screws from the opposite side of the hinge assembly using a T-25 Torx driver (see below).

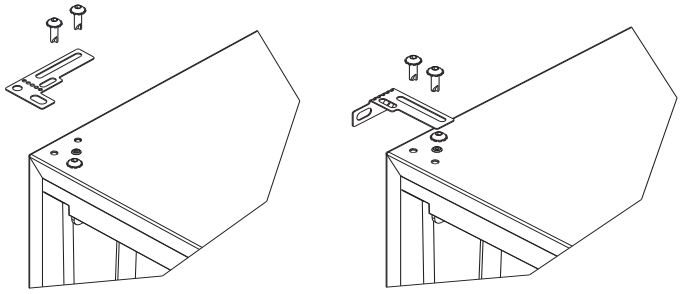

3. Place bracket over holes and attach to unit with two screws removed in step 2 using a T-25 Torx driver. Tighten screws fully.
4. Gently push unit into position. Be careful not to entangle the electrical cord or water line, if applicable.
5. Check to be sure the unit is level from front to back and side to side. Make any necessary adjustments. The unit's top surface should be approximately ⅛" (3 mm) below the countertop.
6. Secure bracket into adjoining surface.

Anti-Tip Bracket

UNITS WITH FRONT-MOUNTED DOOR HINGES

1. Slide unit out so screws on front of unit are easily accessible.

2. Remove the two screws from the front of the unit.

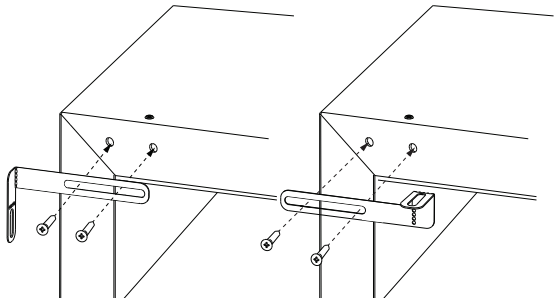

3. Bend bracket along one of the perforations to allow attachment to the desired adjoining surface.

4. Gently push unit into position. Be careful not to entangle the electrical cord or water line, if applicable.

5. Check to be sure the unit is level from front to back and side to side. Make any necessary adjustments. The unit's top surface should be approximately ⅛" (3 mm) below the countertop.

6. Secure bracket to adjoining surface.

FLOOR MOUNTED ANTI-TIP INSTALLATION

(For free-standing applications)

1. Locate two anti-tip brackets included with the kit.

2. Place the unit into the area where it will be installed. Check the door, sides, and top for a proper fit. Also test to make sure the door opens and closes freely.

3. Remove grille and place a mark on the floor at the front of the unit. Also place a mark on the floor in the center of the unit.

4. Remove the unit. Using a square, extend center line "B" (see chart below). This line serves as the back edge for the anti-tip brackets. From the center line, measure "A" to the left and right. This line is the outer edge of each bracket.

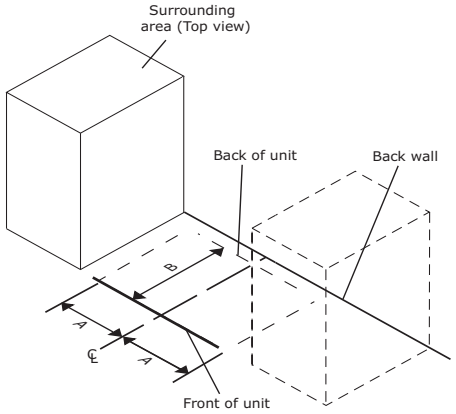

	515	518	524
A	7 5⁄8"	9"	11 15⁄16"
B	22"	22"	22"

5. Place the anti-tip brackets on the floor against the line drawn for the outer edge. Mark spots for the screw holes.

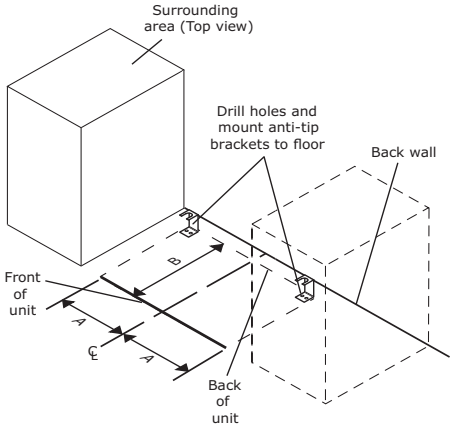

6. Use a 1/8" drill to make two starter holes and fasten the anti-tip brackets to the floor using the screws provided.

7. Place the unit back into position, making sure the feet engage the anti-tip brackets properly. Check the alignment of the lines made on the floor in step 3 with the position of the front feet to ensure proper positioning.

Integrated Panel Installation

1. Fully open door.
2. Starting at corner, pull gasket away from door.
3. Continue to pull gasket free from gasket channel.

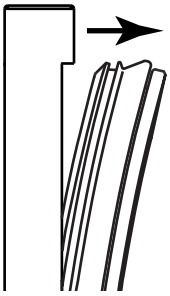

4. Upon removal, lay gasket down on a flat surface.

If the unit has front-mounted hinges, skip ahead to Step 9.

5. Partially loosen the 3 screws securing the top hinge to the top of the cabinet.
6. Align the panel with the outside edge (opposite the hinge) and high enough to align with the highest point in the door.
7. Insert panel underneath top hinge and apply upward pressure while bringing the lower portion of the panel flush to the door inside the lower hinge; the panel will fit snuggly.
8. Align door with cabinet. Tighten the top 3 screws, securing the top hinge to the cabinet.

NOTICE

Due to differences in floor construction or surrounding cabinetry, the panel may not sit flush with the top of the door.

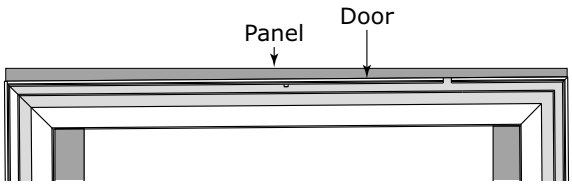

9. With panel aligned to the door, secure panel to door using clamps. A robust tape may also be used. U-Line recommends the use of bar clamps to secure the panel to the door. If using tape, be certain the tape will not damage panel finish upon removal.

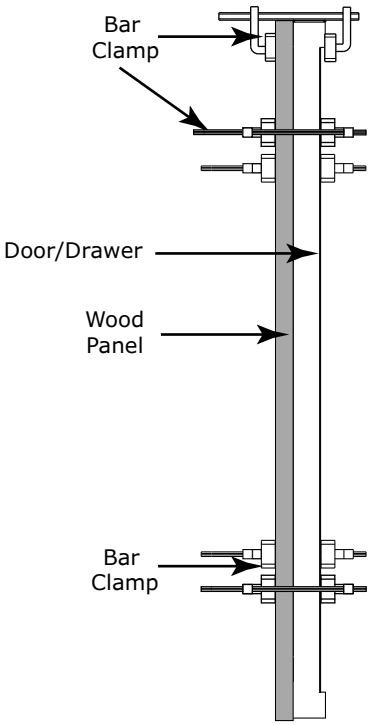

10. Using a 7/64" (3 mm) drill bit, drill 6 pilot holes into the wood panel 1/2" (12 mm) deep using the holes in the door frame as a guide.

NOTICE

It is important to ensure that all drilled holes are drilled to the correct depth in order to avoid splits in the wood when hardwood is installed.

11. Locate 6 of the #6x 1-1/2" (38 mm) screws provided with your unit.
12. Using a Phillips screwdriver, place one screw into each of the 6 pilot holes and screw down. Do not over-tighten screws.
13. Ensure the screws sit flush against the bottom of the channel.

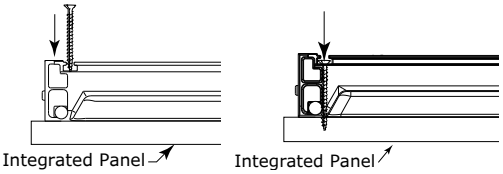

14. Remove clamps from door.

NOTICE

If panel requires additional adjustment after removing clamps, slightly loosen each screw and adjust panel as necessary. Tighten screws upon completion.

15. Starting at the corners, re-install the gasket into the gasket channel in the frame. Make sure the gasket is fully seated.

Control Operation **1 CLASS REFRIGERATOR**

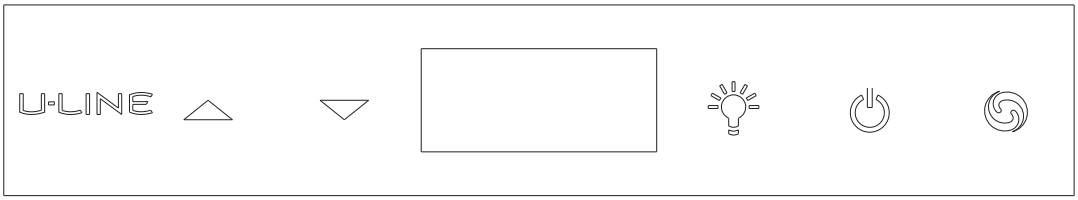

CONTROL FUNCTION GUIDE

FUNCTION	COMMAND	NOTES
ON/OFF	Press ⏻ and release	Unit will immediately turn On or OFF
Adjust Temperature	Press △ or ▽ and release	When the display is flashing, press △ or ▽ to adjust the set point temperature. Note: temperature displayed is the actual temperature inside unit
Adjust light color	Hold ▽ press and release 💡. Press 💡 to scroll through lighting options	Option / Open Door / Closed Door 00 / White / White 01 / BrightShield™ / BrightShield™ 02 (default) / White / BrightShield™
Toggle interior light - Door Closed	Press 💡 and release to toggle interior light option; press again to deactivate	Toggle depends on light color option above. Light output 50%
Toggle between °F / °C	Hold 💡 and ▽ for 5 seconds	The display will change units
Enable Sabbath Mode	Press 💡 and hold for 5 seconds and release	The °F / °C symbol will flash briefly after 5 seconds. Interior light and display will go dark and remain so until user resets mode - unit continues to operate
Disable Sabbath Mode	Press 💡 and release	Display and interior light return to normal operation
Showroom Mode	Hold 💡 and ⏻ for 5 seconds	The °F / °C symbol will flash. Display will be lit and interior light will function. Unit will not cool. Repeat command to return to normal operation

This unit is Star-K certified. See www.star-k.org for more details.

DOOR ALERT NOTIFICATION

When the door is left open for more than 5 minutes:

- A tone will sound for several seconds every minute
- dr will appear in display
- Closed door to silence alert and reset

Control Operation **5 CLASS REFRIGERATOR**

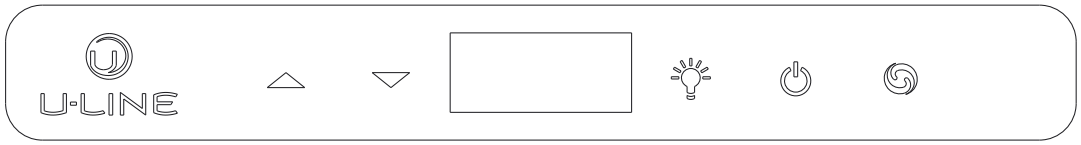

CONTROL FUNCTION GUIDE

FUNCTION	COMMAND	NOTES
ON/OFF	Press ⏻ and release	Unit will immediately turn On or OFF
Adjust Temperature	Press △ or ▽ and release	When the display is flashing, press △ or ▽ to adjust the set point temperature. Note: temperature displayed is the actual temperature inside unit
Adjust light color	Hold ▽ press and release 💡. Press 💡 to scroll through lighting options	Option / Open Door / Closed Door 00 — White — White 01 — BrightShield™ — BrightShield™ 02 (default) — White — BrightShield™
Toggle interior light - Door Closed	Press 💡 and release to toggle interior light option; press again to deactivate	Toggle depends on light color option above. Light output 50%
Toggle between °F / °C	Hold 💡 and ▽ for 5 seconds	The display will change units
Hide Display	Hold U and press 💡	Display will turn off when door is closed. Unit will continue to operate. Repeat command to turn on display
Enable Sabbath Mode	Press 💡 and hold for 5 seconds and release	The °F / °C symbol will flash briefly after 5 seconds. Interior light and display will go dark and remain so until user resets mode - unit continues to operate
Disable Sabbath Mode	Press 💡 and release	Display and interior light return to normal operation
Showroom Mode	Hold 💡 and ⏻ for 5 seconds	The °F / °C symbol will flash. Display will be lit and interior light will function. Unit will not cool. Repeat command to return to normal operation

This unit is Star-K certified. See www.star-k.org for more details.

DOOR ALERT NOTIFICATION

When the door is left open for more than 5 minutes:

- A tone will sound for several seconds every minute
- dr will appear in display
- Closed door to silence alert and reset

Control Operation **NUGGET ICE MACHINE**

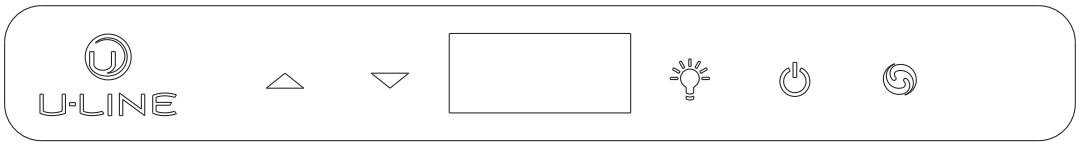

CONTROL FUNCTION GUIDE

FUNCTION	COMMAND	NOTES
ON/OFF	Press ⏻ and release	Unit will immediately turn On or OFF
Adjust light color	Hold ▽ press and release 💡. Press 💡 to scroll through lighting options	Option / Open Door / Closed Door 00 / White / White 01 / BrightShield™ / BrightShield™ 02 (default) / White / BrightShield™
Toggle interior light - Door Closed	Press 💡 and release to toggle interior light option; press again to deactivate	Toggle depends on light color option above. Light output 50%
Adjust ice density	See “Ice” section	
Enable Sabbath Mode	Press 💡 and hold for 5 seconds and release	The °F / °C symbol will flash briefly after 5 seconds. Interior light and display will go dark and remain so until user resets mode - unit continues to operate
Disable Sabbath Mode	Press 💡 and release	Display and interior light return to normal operation
Clean Mode	See “Cleaning” section	
Showroom Mode	Hold ▽ and 💡 for 5 seconds	The °F / °C symbol will flash. Display will be lit and interior light will function. Unit will not cool. Repeat command to return to normal operation

This unit is Star-K certified. See www.star-k.org for more details.

DOOR ALERT NOTIFICATION

When the door is left open for more than 30 minutes:

- Ice production will cease
- A tone will sound for several seconds every minute
- dr will appear in display

Close door to silence alert and reset (Ice production will resume if bin sensor is not satisfied)

Control Operation **CLEAR ICE MACHINE**

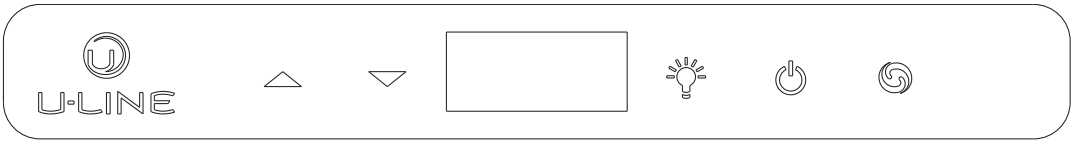

CONTROL FUNCTION GUIDE

FUNCTION	COMMAND	NOTES
ON/OFF	Press ⏻ and release	Unit will immediately turn On or OFF
Adjust light color	Hold ▽ press and release 💡. Press 💡 to scroll through lighting options	Option / Open Door / Closed Door 00 / White / White 01 / BrightShield™ / BrightShield™ 02 (default) / White / BrightShield™
Toggle interior light - Door Closed	Press 💡 and release to toggle interior light option; press again to deactivate	Toggle depends on light color option above. Light output 50%
Adjust ice thickness	See “Ice” section	
Enable Sabbath Mode	Press 💡 and hold for 5 seconds and release	The °F / °C symbol will flash briefly after 5 seconds. Interior light and display will go dark and remain so until user resets mode - unit continues to operate
Disable Sabbath Mode	Press 💡 and release	Display and interior light return to normal operation
Silent Mode (ice production suspended for 3 hours)	Hold △ and ⏻	Display will countdown the hours: 3H, 2H, 1H
Clean Mode	See “Cleaning” section	
Showroom Mode	Hold ▽ and 💡 for 5 seconds	The °F / °C symbol will flash. Display will be lit and interior light will function. Unit will not cool. Repeat command to return to normal operation

This unit is Star-K certified. See www.star-k.org for more details.

BrightShield™



This model includes BrightShield™ with Vyv™ Antimicrobial Light Technology.

BrightShield™

- Kills* and prevents the growth of viruses, bacteria, fungi, yeasts, mold, and mildew
- Provides continuous antimicrobial action to keep surfaces clean
- Is approved for continuous use around people, pets, & plants
- Reduces odors caused by bacteria, fungi, yeasts, mold, and mildew
- Creates a cleaner environment for food, beverages, & ice

* Testing on a non-enveloped virus (MS2 bacteriophage) showed a 97.12% reduction in controlled laboratory testing in 8 hours on hard surfaces. Testing on SARS-CoV-2 (enveloped virus) showed a 98.45% reduction in controlled laboratory testing in 4 hours on hard surfaces. Testing on MRSA E. coli showed 90%+ reduction in controlled laboratory testing in 24 hours on hard surfaces. Results may vary depending on the amount of light that is reaching the surfaces in the space where the product is installed and the length of time of exposure. Use of Vyv™ Antimicrobial Light Technology is not intended to replace manual cleaning and disinfection practices.

BrightShield™ is most effective when used continuously. Your unit is factory-set to use BrightShield™ lighting whenever the door is closed and standard bright white when the door is open. See Control Operations sections for details and other options.

For more information about BrightShield™ visit www.u-line.com

For more information about Vyv™ Antimicrobial Light Technology visit www.vyv.tech

First Use

REFRIGERATORS

Initial startup requires no adjustments. When plugged in, the unit will begin operating under the factory default settings. If the unit was turned off during installation, simply press ⏻ and the unit will immediately switch on. To turn the unit off, press ⏻.

NOTICE

Temperature displayed reflects actual temperature inside unit.

If the temperature displayed is different than selected, the unit is progressing towards the selected temperature. Time to reach set point varies based upon ambient temperature, temperature of product loaded, door openings, etc. U-Line recommends allowing the unit to reach set points before loading.

ICE MACHINES

Initial startup requires no adjustments. See CONTROL OPERATION section for more details.

NOTICE

Discard the ice produced during the first two or three hours of operation to avoid possible dirt or scale that may dislodge from the water line.

When plugged in, the unit will begin operating under the factory default settings. If the unit was turned off during installation, simply press ⏻ and the unit will immediately switch on. To turn the unit off, press ⏻ and release.

Airflow and Product Loading

External Airflow

ALL MODELS

All models require proper airflow to perform at their highest efficiency. DO NOT block the front grille at any time, or the unit will not perform as expected. DO NOT install the unit behind a closed door.

Internal Airflow

REFRIGERATORS

- When loading, leave space between internal fans, vents, and side walls to allow air to circulate freely.

PRODUCT LOADING

Bottles and cans come in many shapes and sizes. Not all bottles and cans will fit on every shelf and wine rack. Larger diameter champagne and Magnum bottles only fit on wine raks when noted on the product specifications. When determining capacities, U-Line uses typical 12 oz. cans, 12 oz. bottles, 750 mL white wine and red wine bottles shown below.

NOTICE

Restricting airflow may result in poor product performance, product failure, and uneven internal temperatures and may freeze contents.

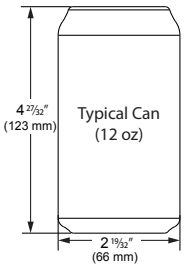

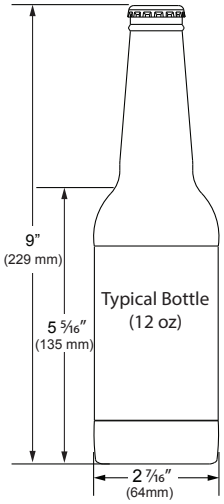

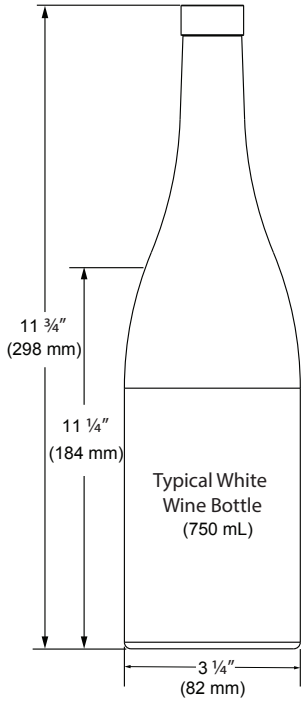

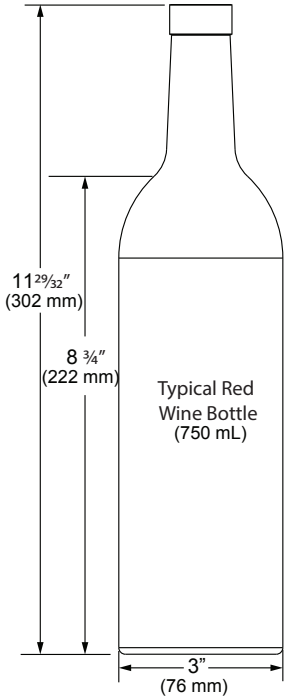

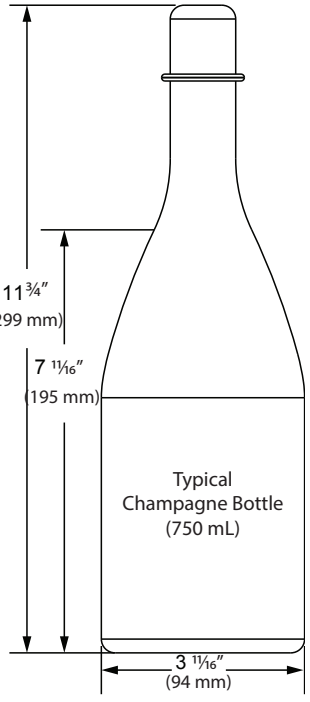

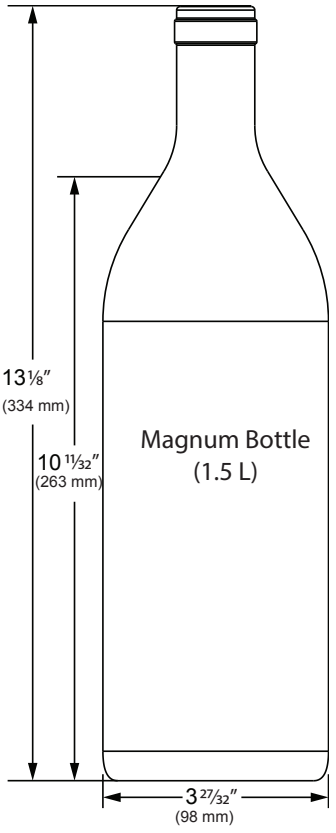

Interior Adjustments

1 CLASS REFRIGERATOR

INTERIOR SHELVES

Removing and Installing Interior Shelves

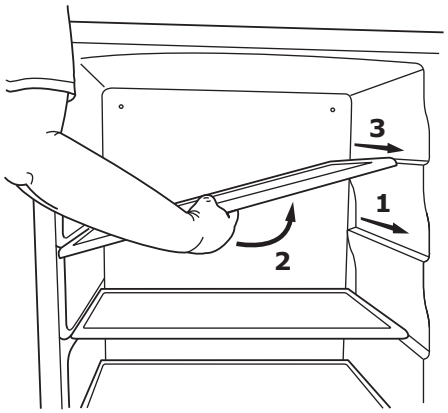

For models equipped with glass shelves having recessed shelf supports, remove the shelves as follows:

1. Pull shelf out about 6" (1), until back of shelf clears the “hump” on the right-hand side.
2. Tilt up right-hand edge of shelf (2).
3. Remove shelf from unit by pulling out (3).

Insert the shelves as follows:

1. To move to a different position in the unit, insert shelf at an angle, approximately 15-20°, over the rib in the side of the unit where you want to place the shelf. Place the shelf into the unit at an angle to clear the door.
2. Continue to slide the shelf into the unit at an angle until it clears the door.

   Lower the shelf and push it in completely. Ensure the raised edge strip is toward the rear of the unit.

NOTICE

Make sure the shelves are inserted fully into the unit.

The edge strip toward the rear prevents cans and bottles from freezing against the cold evaporator.

5 Class Refrigerator

All 5 Class models feature side mounted rack supports with 19 adjustment positions.

All refrigerators ship with 3 Slide and Secure storage bins. Remove and reposition as desired.

Slide and Secure Storage Bin Removal

1. Empty and remove bin.

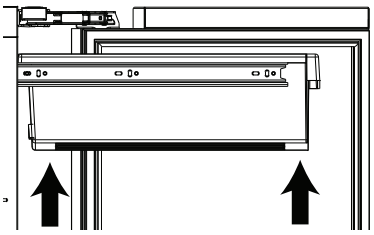

2. Firmly grasp both sides of storage bin frame and lift front end slightly (about ¼”) to center the pin in the slot.

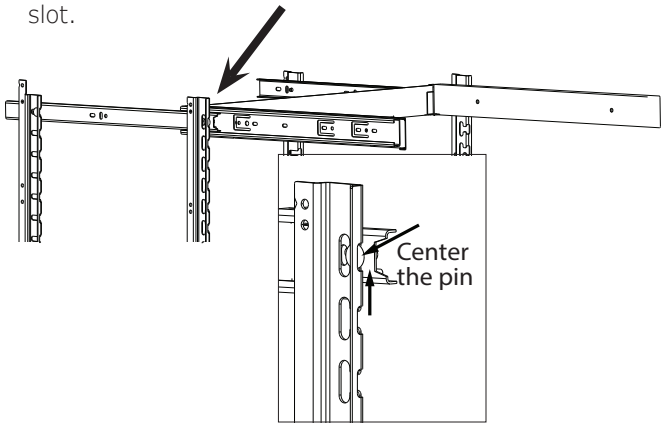

3. Pull frame towards you until all pins are clear of the slots. If only repositioning the frame, do not remove completely - go to “Storage Bin Installation” Step 2.

4. Slightly tilt one side. Gently pull frame towards you to remove from unit.

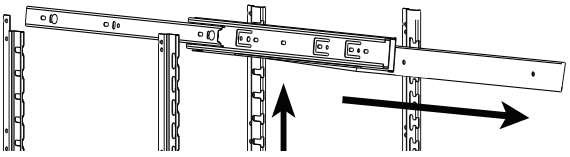

Note: Take care when removing frame to avoid scratching interior of unit.

5. Once removed, retract the slides.

Note: The slides on the frame have a thin coating which is used to block moisture and provide lubrication. Use care when handling.

Slide and Secure Storage Bin Installation

1. Insert empty storage bin frame into unit with one side tilted slightly downward until back pin is between front and rear rail supports.

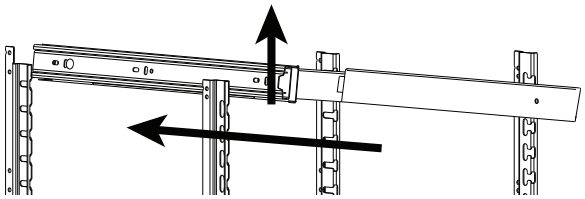

2. Tilt frame back to horizontal and line up 2 back pins with rear rail support. Line up left side of frame with rear and front rail support. Continue inserting frame until both pins engage. The front will set down slightly and lock into place. Repeat on right side.

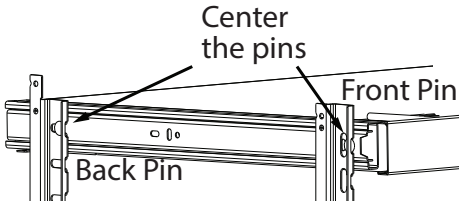

3. Fully extend frame, position bin over frame and lower (rear first) into position.

Slide and Secure Storage Bins

Glass inserts are designed so bottles and cans sit flat. The inserts may be removed when storing produce or other items. The ridges in the bottom facilitate air flow.

Clean the storage bins with soap and water.

NUGGET ICE MACHINE

Ice

The Nugget Ice Machine produces cylindrical bits of compressed ice approximately $^{3}/_{4}$" x $^{1}/_{2}$".

Ice is produced until the machine senses the bin is full. As ice slowly melts in the bin, the level of ice drops and ice production resumes. This ensures a constant supply of fresh ice is always available.

The factory default ice setting is 0, which produces a firm and compact ice nugget. U-Line's exclusive U-Choose™ ice adjustability feature allows you five levels of adjustment from 0 to -5. At -5 the ice is soft and chewable.

To adjust the ice density:

1. Hold ⌓ for 5 seconds - display will flash current ice setting

2. Adjust using ⌓ or ▽

3. Confirm setting by pressing ☼

CLEAR ICE MACHINE

ICE CUBE THICKNESS ADJUSTMENT

NOTICE

Ice thickness adjustment should only be made one increment at a time. Allow ice maker production to stabilize for 24 hours before rechecking ice thickness.

Ice is produced in layers resulting in a clear cube. Ice in bin may develop surface frost which disappears when cube is placed in liquid.

Ice cubes in any given batch will vary, so it is necessary to choose cubes from the sample area for comparison when making adjustments.

The ice cube thickness is factory set for best overall performance. The factory setting is designed to maintain an ice bridge of approximately 1/16" to 1/8" (1.6 mm to 3.2 mm) under normal conditions, resulting in a dimple of approximately 1/4" to 1/2" (6.4 mm to 12.7 mm) in depth. A fuller cube with less of a dimple results in a thicker ice bridge. As the ice bridge becomes thicker, the tendency for the cubes to stay together as a slab increases. A bridge thicker than 1/8" (3.2 mm) may cause cubes to overfill the ice bucket.

32 ice cubes are formed on a 4 x 8 slab during each cycle. Each cycle takes approximately 15-20 minutes at the default cube thickness (0).

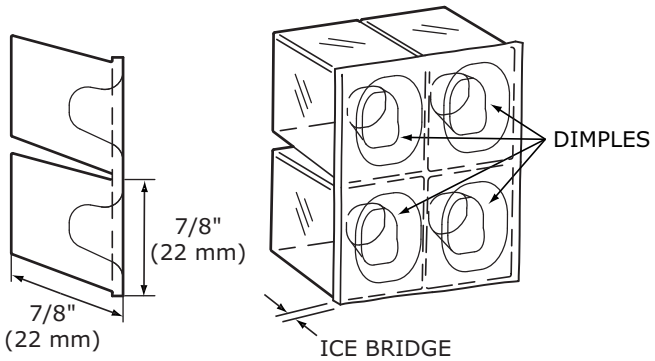

Your clear ice machine is pre-set to produce ice between the optimal dimensions illustrated below:

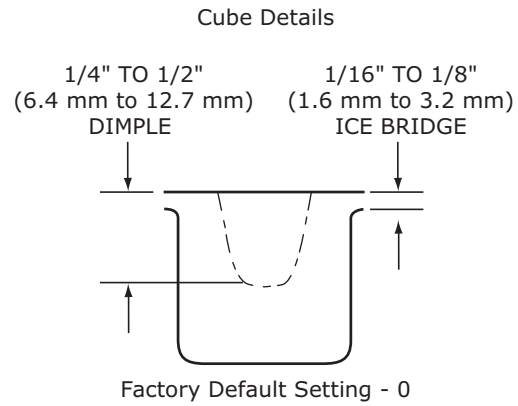

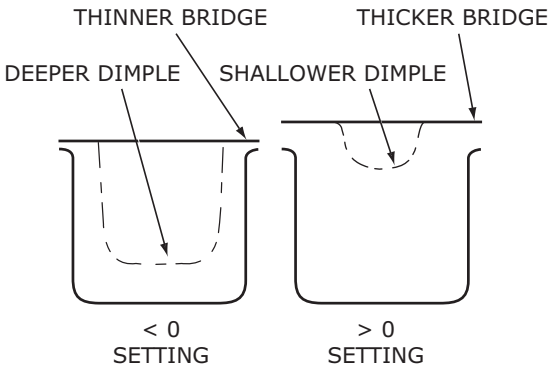

Ice thickness adjustments are made using the control panel as follows:

1. To enter the thickness adjustment mode:

   - Press and hold ⌃ for 5 seconds.

   - The display will switch to “0” to confirm the thickness adjustment mode has been selected.

The factory setting is “0”. Use ⌃ to raise the setting and thicken the ice bridge, or ⌄ to lower the setting to thin the ice bridge.

Ice cubes in any given batch will vary, so it is necessary to choose cubes from the sample area for comparison when making adjustments.

Cleaning

Stainless Models

Stainless door panels and handles can discolor when exposed to chlorine gas, pool chemicals, saltwater or cleaners with bleach.

Keep your stainless unit looking new by cleaning with a good quality all-in-one stainless steel cleaner and polish monthly. For best results use Claire® Stainless Steel Polish and Cleaner. Comparable products are acceptable. Frequent cleaning will remove surface contamination that could lead to rust. Some installations may require cleaning weekly.

Do not clean with steel wool pads.

Do not use stainless steel cleaners or polishes on any glass surfaces.

Clean any glass surfaces with a non-chlorine glass cleaner.

Do not use cleaners not specifically intended for stainless steel on stainless steel surfaces (this includes glass, tile and counter cleaners).

If any surface discoloring or rusting appears, clean it quickly with Bon-Ami® or Barkeepers Friend Cleanser® and a nonabrasive cloth. Always clean with the grain. Always finish with Claire® Stainless Steel Polish and Cleaner or comparable product to prevent further problems.

Using abrasive pads such as Scotchbrite™ will cause the graining in the stainless steel to become blurred.

Rust not cleaned up promptly can penetrate the surface of the stainless steel and complete removal of the rust may not be possible.

Integrated Models

To clean integrated panels, use household cleaner per the cabinet manufacturer's recommendation.

INTERIOR CLEANING

Disconnect power to the unit.

Clean the interior and all removed components using a mild nonabrasive detergent and warm water solution applied with a soft sponge or non-abrasive cloth.

Rinse the interior using a soft sponge and clean water.

Do not use any solvent-based or abrasive cleaners. These types of cleaners may transfer taste to the interior products and damage or discolor the lining.

REFRIGERATORS
DEFROSTING

Under normal conditions this unit does not require manual defrosting. Minor frost on the rear wall or visible through the evaporator plate vents is normal and will melt during each off cycle.

If there is excessive build-up of 1/4" (6 mm) or more, manually defrost the unit.

Ensure the door is closing and sealing properly.

High ambient temperature and excessive humidity can also produce frost.

⚠ CAUTION

DO NOT use an ice pick or other sharp instrument to help speed up defrosting. These instruments can puncture the inner lining or damage the cooling unit. DO NOT use any type of heater to defrost. Using a heater to speed up defrosting can cause personal injury and damage to the inner lining.

NOTICE

The drain pan was not designed to capture the water created when manually defrosting. To prevent water from overflowing the drain pan and possibly damaging water sensitive flooring, the unit must be removed from cabinetry.

To defrost:

1. Disconnect power to the unit.
2. Remove all products from the interior.
3. Prop the door in an open position (2 in. [50 mm] minimum).
4. Allow the frost to melt naturally.
5. After the frost melts completely clean the interior and all removed components. (See INTERIOR CLEANING).

NUGGET ICE MACHINE

NUGGET ICE MACHINE CLEANING CYCLE

This ice machine has an automatic clean alert function. The control will indicate CL in the display, reminding you to clean your unit. When CL is displayed, ice production will continue. Depending on water conditions, more frequent cleaning may be necessary: see chart below. Cleaning removes lime scale, other mineral deposits, and sanitizes the machine. Poor ice quality and reduced ice output are signs that cleaning is necessary.

TDS (Total Dissolved Solids) Level mg/L (ppm)	Cleaning Interval
5 - 150	6 months
150 - 250	4 months
250 - 400	3 months (or sooner)
Hardness Level mg/L (ppm)	**Cleaning Interval**
0 - 66	6 months
67 - 133	4 months
134 - 200	3 months (or sooner)

Under normal conditions cleaning should be done when the display shows CL. You may initiate a cleaning cycle at any time by pressing and holding the clean button for 10 seconds. 01 will appear in the display indicating the start of the cleaning process.

You may override CL in the display without cleaning by pressing and holding the up, down, & light button for 10 seconds. ICE will scroll in the display and the cleaning reminder (CL) will be reset for another approximate six month cycle. Failure to clean may reduce the quality and quantity of ice produced. Once the clean cycle begins, it can be canceled by pressing three times. Press once more to start making ice. The clean cycle will automatically cancel if user fails to activate control at steps 2, 3b, and 5b within 2 hours.

Required for cleaning:

- Hose and funnel - provided with unit
- Bucket and cleaning sponge
- Clean potable water
- SafeCLEAN Plus™ Cleaner (Part No. ULANUGGETCLEAN) 1-8oz. bottle included with unit
- 1 Water filter (if required)

Need more cleaner? Visit u-line.com

⚠ CAUTION

Use only SafeCLEAN Plus™ Cleaner. Use of any other cleaner may damage the finish of the evaporator and will void the warranty.

Follow safety and handling instructions printed on the SafeCLEAN Plus™ bottle.

Notice:
Select models include a water filter. The filter must remain in place when using and cleaning the machine. The filter is designed to filter out scale, sediment, particles and cloudiness as well as reduce chlorine and other off tastes and odors. U-Line recommends replacing the filter (Part No. ULANUGGETFILTER) when you clean your machine. The filter is available at

QUICK START GUIDE



1. Press and Hold for 10 seconds
   a. 01 will appear in the display
   b. Remove access shield
   c. Remove all ice in bin
   d. Remove any ice protruding from the ice dispenser tube.

2. Insert the end of the cleaning tube into the ice dispenser; slowly pour in approximately 1 quart of hot (min. 100º F) potable water. This will melt ice inside the dispenser tube. It is normal for some water to flow from the ice dispenser tube and exit from the vent tube while pouring. Omit this step if no ice is in the ice dispenser tube.

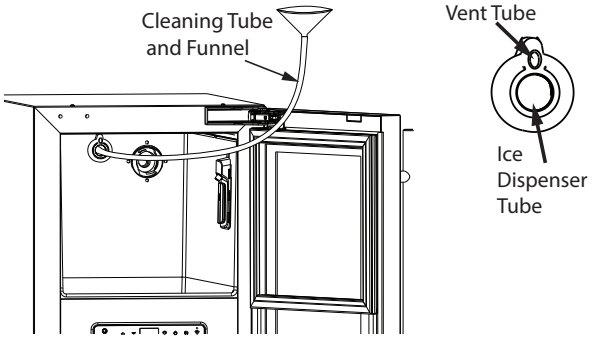

3. Press and release
   a. 02 will appear in the display
   b. Mix 4 ounces of SafeCLEAN Plus™ with 2 quarts of potable water.

4. Wait until 03 appears in the display
   a. Using the funnel and cleaning tube, slowly pour ¾ of the cleaning solution into the dispenser tube. Air and some water will exit the vent tube. Remove cleaning tube. (Optional - for deeper cleaning, allow solution to soak for 60 minutes)
   b. Press and release

5. 04 will appear in the display
   a. The machine will circulate the solution, cleaning and sanitizing the internal components, for approximately 20 minutes.
   b. While the machine is circulating the cleaning solution, use ½ of the remaining cleaning solution and a sponge to wipe down the inside of the ice bin and scoop. Rinse with clean potable water.

6. When 05 appears in the display, 3 soft tones will sound, indicating the cleaning phase is complete
   a. Remove and discard water filter if applicable by rotating ¼ turn counterclockwise.
   b. Use the remaining cleaning solution to wipe the manifold and surrounding area. Rinse with clean potable water.

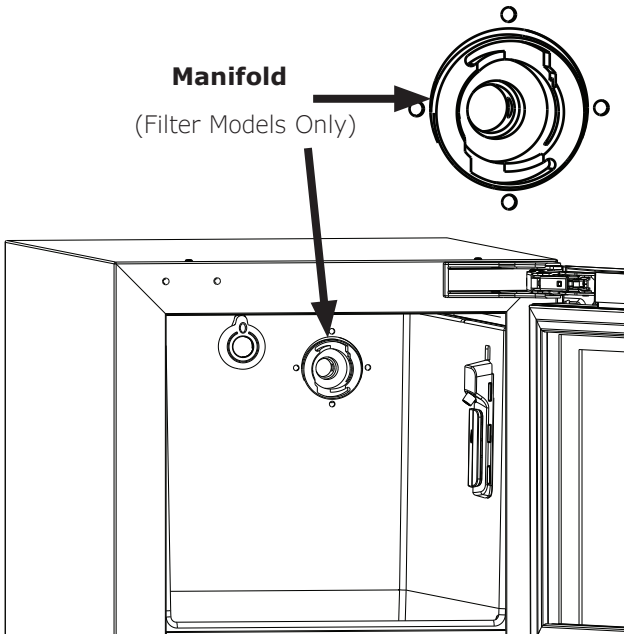

   c. Using the hose and funnel, slowly pour 1.5 quarts (48 oz.) of clean potable water into the ice dispenser tube. Air and some water will exit the vent tube.
   d. Install new water filter. Press and rotate ¼ turn clockwise
   e. Press and release

7. 06 will appear in the display
   a. Reinstall shield and close door.
   b. The machine will circulate water and perform a series of final rinses for approximately 15 minutes.
   c. The unit will resume making ice - indicated by 3 soft tones and ICE scrolling in the display.
   . uop[Discard first 10 minutes of ice production.

CLEAR ICE MACHINE

CLEAR ICE MACHINE CLEANING CYCLE

Your U-Line clear ice machine has an automatic clean alert function. Cleaning cycles should be run as notified. Otherwise, to maintain operational efficiency the unit should be cleaned every three months. Depending on water conditions, more frequent cleaning may be necessary. If the ice machine requires more frequent cleaning, consult a plumber to test the water quality and recommend appropriate treatment.

⚠ CAUTION

Wear rubber gloves and safety goggles and/or face shield when handling Ice Machine Cleaner.

NOTICE

Use only U-Line Ice Machine Cleaner (Part No. ULACLRCLEAN), available for purchase at u-line.com or see your dealer. It is a violation of federal law to use this solution in a manner inconsistent with its labeling. Use of any other cleaner can ruin the finish of the evaporator and will void the warranty. Read and understand all labels printed on the package before use.

U-Line Ice Machine Cleaner is used to remove lime scale and other mineral deposits. Refer to the following steps to initiate the self-cleaning cycle.

⚠ CAUTION

Never use anything to force ice from the evaporator. Damage may result.

1. Turn the ice machine off and allow any ice to melt off of the evaporator.

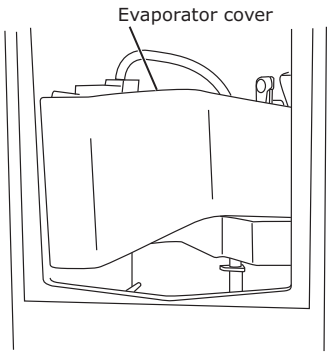

2. Remove all ice from the storage bin.

3. Remove evaporator cover.

4. Remove the standpipe by lifting it up while using a slight back and forth motion to loosen it from the drain hole. The water in the reservoir will flow down the drain.

5. Re-install the standpipe into the water trough.

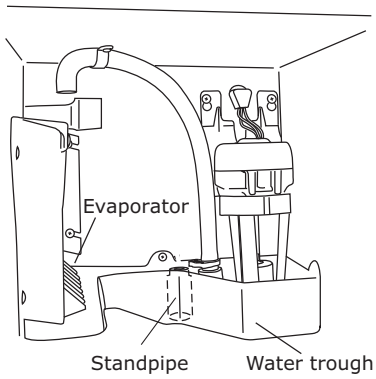

6. Clean the Interior Bin as follows:

- Dilute one packet of CLR cleaner into two quarts of water.
- Using a sponge or cloth, clean interior of ice bin, tubing and door. This cleaner will remove all mineral deposits and other contaminants from the surfaces.
- Using a bottle brush, clean out the trough drain tube and pump tubing where needed.

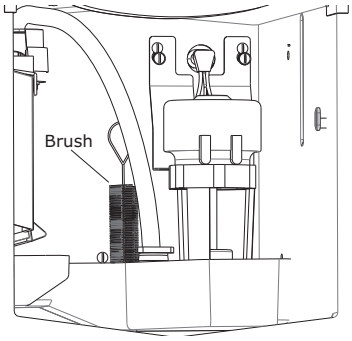

7. Turn unit on by pressing ⏻.

8. Place the unit into CLEAN mode by holding  for 5 seconds.

9. When water begins flowing over the evaporator (approximately 3 minutes), pour 1 packet of CLR cleaner into the water trough. The cleaning process will last approximately 45 minutes.

10. Dilute 1 tablespoon bleach in 1 gallon of warm water. Apply this solution to the entire inside of the storage area. Then rinse thoroughly with water.

The unit will resume operation approximately 15 minutes after the automated cleaning process is completed. The water fill valve will energize, fill the water reservoir, and shut-off after three minutes. The compressor begins to operate and water flows over the evaporator assembly (ice mold). Initially, the water flow may not be uniform, causing uneven sized cubes or water to spill into the ice storage bin. This is a normal situation that will correct itself within the first 24 hours of operation.

NOTICE

Discard all ice produced in the first harvest.

Should power to the unit be interrupted during the self-clean cycle, it will be necessary to repeat the complete cleaning cycle after power is restored.

REFRESH KIT

Due to variations in water quality or inadequate maintenance your unit may become excessively coated in lime scale or calcium. U-Line offers a cost effective refresh kit which replaces many interior components and will return your unit to like new condition. Refresh kits may be ordered from your local distributor and installed by your local service company. For information on your local distributor or service company please visit www.u-line.com.

U-Line Corporation (U-Line) Limited Warranty

One Year Limited Warranty

For one year from the date of original purchase, this warranty covers all parts and labor to repair or replace any part of the product that proves to be defective in materials or workmanship. For products installed and used for normal residential use, material cosmetic defects are included in this warranty, with coverage limited to 60 days from the date of original purchase. All service provided by U-Line under the above warranty must be performed by a U-Line factory authorized servicer, unless otherwise specified by U-Line. Service provided during normal business hours.

Two Year Limited Warranty (5 Class Product)

For two years from the date of original purchase, this warranty covers all parts and labor to repair or replace any part of the product that proves to be defective in materials or workmanship. For products installed and used for normal residential use, material cosmetic defects are included in this warranty, with coverage limited to 60 days from the date of original purchase. All service provided by U-Line under the above warranty must be performed by a U-Line factory authorized servicer, unless otherwise specified by U-Line. Service provided during normal business hours.

Available Second & Third Year Limited Warranty

In addition to the standard one and two year warranties outlined above, U-Line offers a one year extension of the warranties from the date of purchase, free of charge. To take advantage of this extension, you must register your product with U-Line within 60 days from the date of purchase at u-line.com and provide proof of purchase.

Five Year Sealed System Limited Warranty

For five years from the date of original purchase, U-Line will repair or replace the following parts, labor not included, that prove to be defective in materials or workmanship: compressor, condenser, evaporator, drier, and all connecting tubing. All service provided by U-Line under the above warranty must be performed by a U-Line factory authorized servicer, unless otherwise specified by U-Line. Service provided during normal business hours.

Terms

These warranties apply only to products installed in any one of the fifty states of the United States, the District of Columbia, or the ten provinces of Canada. The warranties do not cover any parts or labor to correct any defect caused by negligence, accident or improper use, maintenance, installation, service, repair, acts of God, fire, flood or other natural disasters. The product must be installed, operated, and maintained in accordance with your product's User Guide.

The remedies described above for each warranty are the only ones that U-Line will provide, either under these warranties or under any warranty arising by operation of law. U-Line will not be responsible for any consequential or incidental damages arising from the breach of these warranties or any other warranty, whether express, implied, or statutory. Some states do not allow the exclusion or limitation of incidental or consequential damages, so the above limitation or exclusion may not apply to you. These warranties give you specific legal rights, and you may also have other rights which vary from state to state.

Any warranty that may be implied in connection with your purchase or use of the product, including any warranty of *merchantability* or any warranty *fit for a particular purpose* is limited to the duration of these warranties, and only extends to five years in duration for the parts described in the section related to the five year limited warranty above. Some states do not allow limitations on how long an implied warranty lasts, so the above limitations may not apply to you.

- The warranties only apply to the original purchaser and are non-transferable.
- The second, third, and five year warranties cover products installed and used for normal residential or designated marine use only.
- The warranties apply to units operated outside only if designed for outdoor use by model and serial number.
- U-Line Commercial products are covered by the one year and 5 year limited warranties and are not eligible for the second and third year limited warranties.
- Replacement water filters, light bulbs, and other consumable parts are not covered by these warranties.
- The start of U-Line's obligation is limited to four years after the shipment date from U-Line.
- In-home instruction on how to use your product is not covered by these warranties.
- Food, beverage, and medicine loss are not covered by these warranties.
- If the product is located in an area where U-Line factory authorized service is not available, you may be responsible for a trip charge or you may be required to bring the product to a U-Line factory authorized service location at your own cost and expense.
- Units purchased after use as floor displays, and/or certified reconditioned units, are covered by the limited one year warranty only and no coverage is provided for cosmetic defects.
- Signal issues related to Wi-Fi connectivity are not covered by these warranties.

For parts and service assistance, or to find U-Line factory authorized service near you, contact U-Line:
8900 N. 55th Street, Milwaukee, WI 53223 • u-line.com • onlineservice@u-line.com • +1.414.354.0300

Copyright U-Line Corporation. All Rights Reserved. | Publication Number 30379 | 3/2024 Rev. Q