# T&S BRASS AND BRONZE WORKS, INC.

2 Saddleback Cove / P.O. Box 1088
Travelers Rest, SC 29690

Travelers Rest, SC: 800-476-4103 • Simi Valley, CA: 800-423-0150 • Fax: 864-834-3518 • www.tsbrass.com

Model No.

**PG-8WREV**

Item No.

This Space for Architect/Engineer Approval

Job Name_____Date_____

Model Specified_____ Quantity_____

Customer/Wholesaler_____

Contractor_____

Architect/Engineer_____

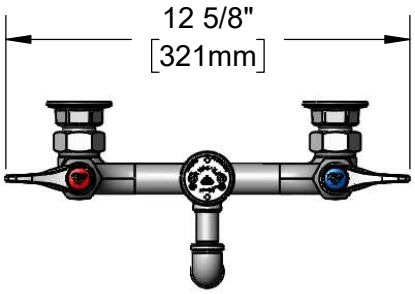

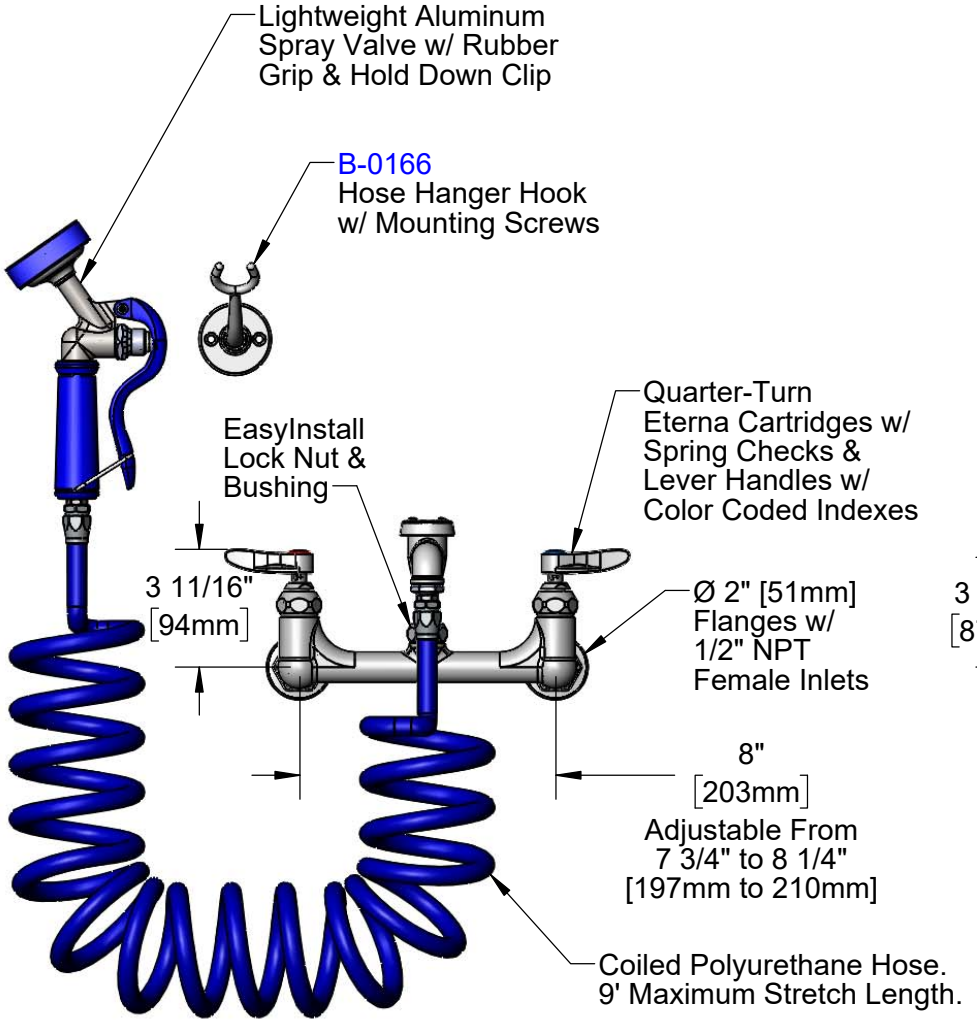


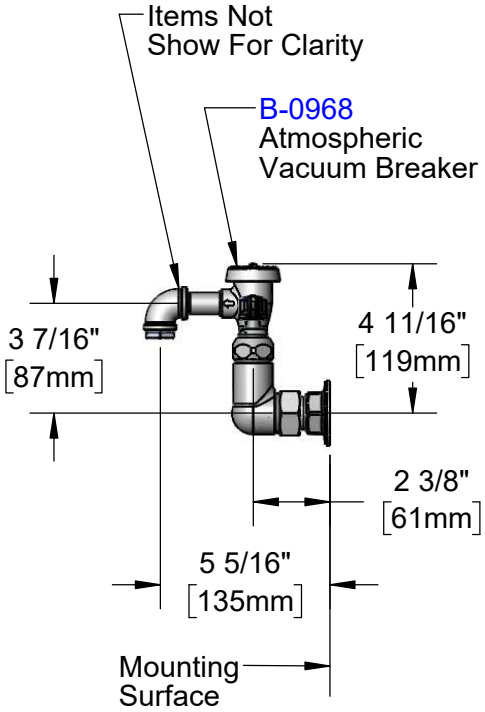


Product Specifications:

Pet Grooming Station: 8" Wall Mount Mixing Faucet, Quarter-Turn Eterna Cartridges w/ Spring Checks, Lever Handles, Vacuum Breaker, 9' Coiled Hose w/ Angled Aluminum Spray Valve & 1/2" NPT Female Inlets

Product Compliance:

ASME A112.18.1 / CSA B125.1
NSF 61 Exempt (Non-Potable)
ASSE 1001 (VB)

| Drawn: LSA | Checked: MRC | Approved: JHB | Date: 12/20/19 | Scale: 1:6 | Sheet: 1 of 2 |
|---|---|---|---|---|---|

# T&S BRASS AND BRONZE WORKS, INC.

2 Saddleback Cove / P.O. Box 1088
Travelers Rest, SC 29690

Travelers Rest, SC: 800-476-4103 • Simi Valley, CA: 800-423-0150 • Fax: 864-834-3518 • www.tsbrass.com

Model No.

**PG-8WREV**

Item No.

| ITEM NO. | SALES NO. | DESCRIPTION |
|---|---|---|
| 1 | 001355-40 | Elbow, 3/8 NPT |
| 2 | 000357-40 | Nipple, 3/8" NPT x 2" |
| 3 | PG-35AV-CH | Lightweight Aluminum Angled Spray Valve w/ Coiled Polyurethane Hose |
| 4 | PG-35AV | Lightweight Aluminum Angled Spray Valve |
| 5 | B-0166 | Wall Hook |
| 6 | B-0968 | 3/8" NPT Vacuum Breaker |
| 7 | 001904-25 | Adapter, 3/8 Male x 1/4 Female |
| 8 | EZ-K | EasyInstall Kit |
| 9 | 001065-45 | O-ring |
| 10 | 014200-45 | Star Washer, Anti-Rotation |
| 11 | 001193-19NS | Red Button Index, Press-in |
| 12 | 000925-45 | Lab Handle Screw |
| 13 | 002712-40NS | Quarter-Turn Eterna Cartridge w/ Spring Check, Handle, Red Index & Screw, RTC |
| 14 | 012443-40NS | Quarter-Turn Eterna Cartridge w/ Spring Check, RTC |
| 15 | 018506-19NS | Blue Button Index, Press-in |
| 16 | 001638-45NS | Lever Handle (New Style) |
| 17 | 002711-40NS | Quarter-Turn Eterna Cartridge w/ Spring Check, Handle, Blue Index & Screw, LTC |
| 18 | 012442-40NS | Quarter-Turn Eterna Cartridge w/ Spring Check, LTC |
| 19 | 00AA | 1/2" NPT Female Eccentric Flange |
| 20 | 001019-45 | Coupling Nut Washer |

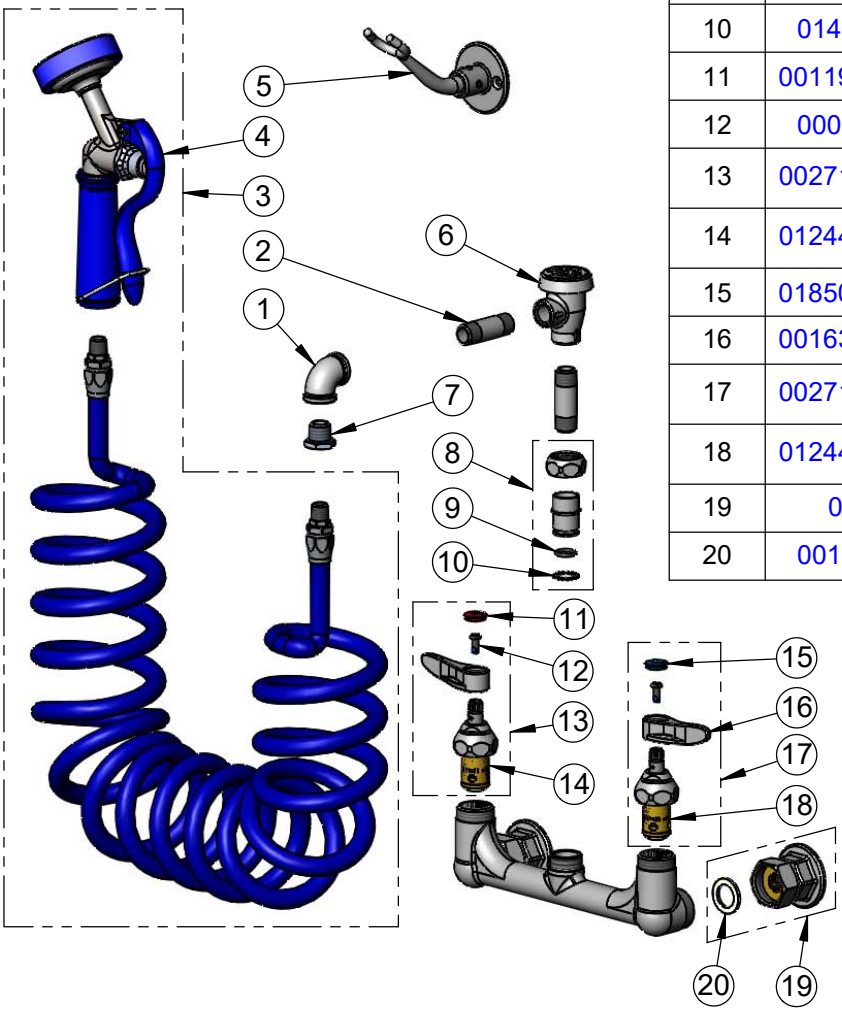


Product Specifications:

Pet Grooming Station: 8" Wall Mount Mixing Faucet, Quarter-Turn Eterna Cartridges w/ Spring Checks, Lever Handles, Vacuum Breaker, 9' Coiled Hose w/ Angled Aluminum Spray Valve & 1/2" NPT Female Inlets

Product Compliance:

ASME A112.18.1 / CSA B125.1
NSF 61 Exempt (Non-Potable)
ASSE 1001 (VB)

| Drawn: LSA | Checked: MRC | Approved: JHB | Date: 12/20/19 | Scale: NTS | Sheet: 2 of 2 |
|---|---|---|---|---|---|