T&S BRASS AND BRONZE WORKS, INC.

2 Saddleback Cove / P.O. Box 1088
Travelers Rest, SC 29690

Travelers Rest, SC: 800-476-4103 • Simi Valley, CA: 800-423-0150 • Fax: 864-834-3518 • www.tsbrass.com

Model No.

PB-8DOSN00KZKZZ

Item No.

This Space for Architect/Engineer Approval

Job Name_____Date_____

Model Specified_____ Quantity_____

Customer/Wholesaler_____

Contractor_____

Architect/Engineer_____

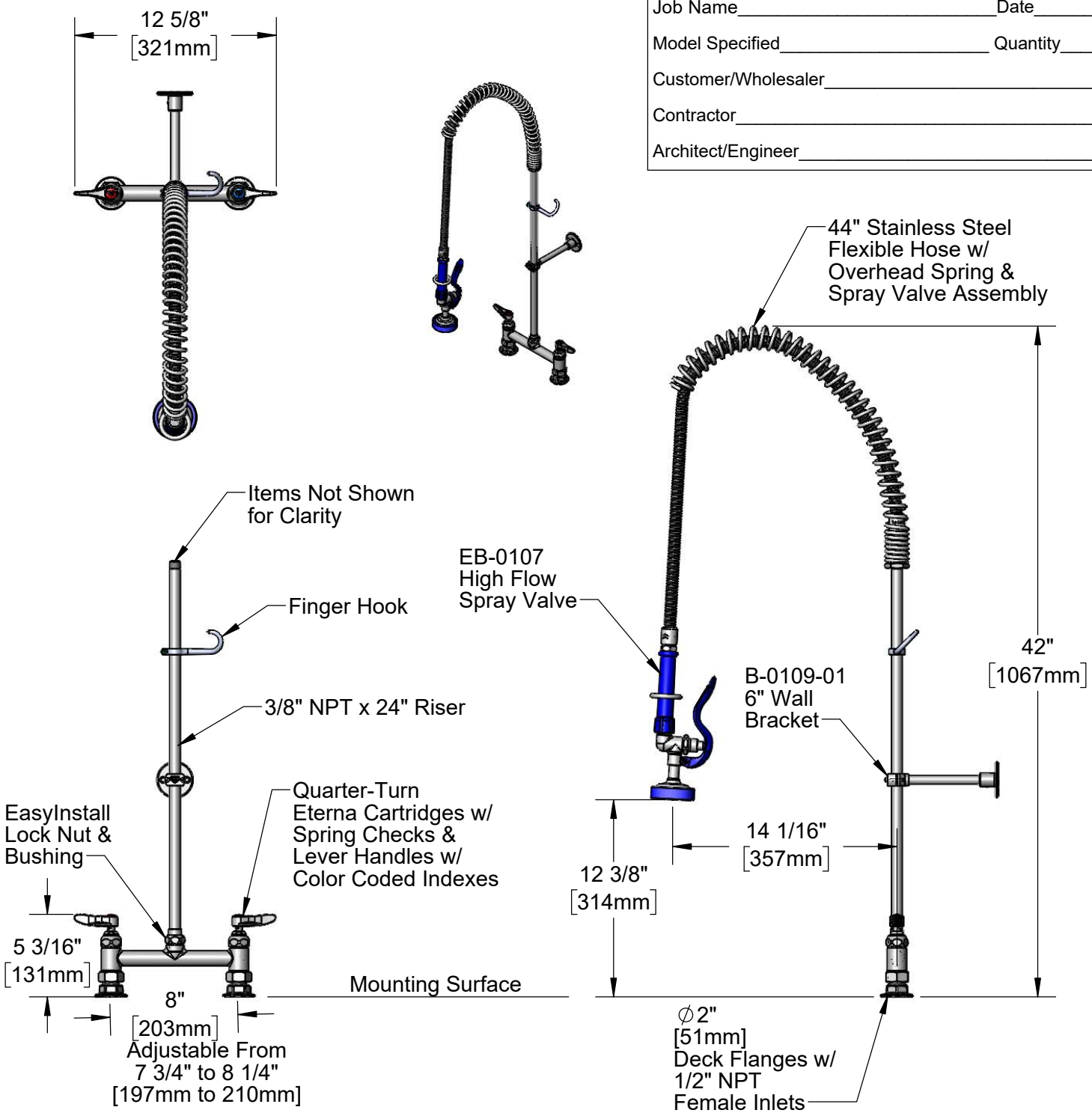

Product Specifications:

Pet Grooming Unit: 8" Deck Mount Mixing Faucet, Quarter-Turn Eterna Cartridges w/ Spring Checks, Lever Handles, 24" Riser, 44" Flexible Stainless Steel Hose, High Flow Spray Valve, 6" Wall Bracket & 1/2" NPT Female Inlets

Product Compliance:

ASME A112.18.1 / CSA B125.1
NSF 61 Exempt (Non-Potable)
2019 DOE PRSV Non-Compliant

Drawn: LSA	Checked: MRC	Approved: JHB	Date: 12/20/19	Scale: 1:9	Sheet: 1 of 2

T&S BRASS AND BRONZE WORKS, INC.

2 Saddleback Cove / P.O. Box 1088
Travelers Rest, SC 29690

Travelers Rest, SC: 800-476-4103 • Simi Valley, CA: 800-423-0150 • Fax: 864-834-3518 • www.tsbrass.com

Model No.

PB-8DOSN00KZKZZ

Item No.

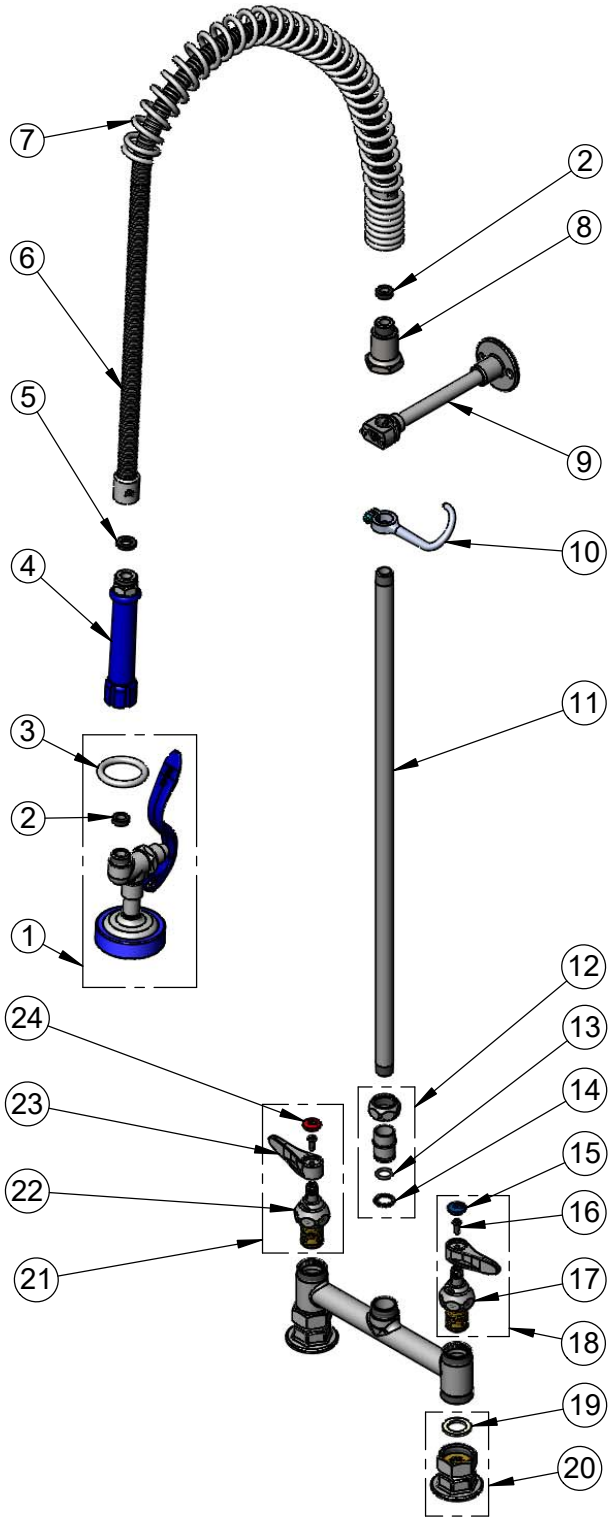

ITEM NO.	SALES NO.	DESCRIPTION
1	EB-0107	High Flow Spray Valve (Blue)
2	010476-45	#27 Washer
3	000907-45	Spray Valve Hold Down Ring
4	011482-40	Blue Grip Handle
5	001014-45	Washer, B-0100 Hose Barrel
6	B-0044-H2A	44" Flexible Stainless Steel Hose, Less Handle
7	000888-45	EasyInstall Overhead Spring
8	000821-40	Spring Body
9	B-0109-01	6" Wall Bracket
10	004R	Finger Hook
11	000372-40	3/8" NPT x 24" Riser
12	EZ-K	EasyInstall Kit
13	001065-45	O-Ring
14	014200-45	Star Washer, Anti-Rotation
15	018506-19NS	Blue Button Index, Press-in
16	000925-45	Lab Handle Screw
17	012442-40NS	Quarter-Turn Eterna Cartridge w/ Spring Check, LTC
18	002711-40NS	Quarter-Turn Eterna Cartridge w/ Spring Check, Handle, Blue Index & Screw, LTC
19	001019-45	Coupling Nut Washer
20	00AA	1/2" NPT Female Eccentric Flange
21	012443-40NS	Quarter-Turn Eterna Cartridge w/ Spring Check, RTC
22	002712-40NS	Quarter-Turn Eterna Cartridge w/ Spring Check, Handle, Red Index & Screw, RTC
23	001638-45NS	Lever Handle (New Style)
24	001193-19NS	Red Button Index, Press-in

Product Specifications:

Pet Grooming Unit: 8" Deck Mount Mixing Faucet, Quarter-Turn Eterna Cartridges w/ Spring Checks, Lever Handles, 24" Riser, 44" Flexible Stainless Steel Hose, High Flow Spray Valve, 6" Wall Bracket & 1/2" NPT Female Inlets

Product Compliance:

ASME A112.18.1 / CSA B125.1
NSF 61 Exempt (Non-Potable)
2019 DOE PRSV Non-Compliant

Drawn: LSA	Checked: MRC	Approved: JHB	Date: 12/20/19	Scale: NTS	Sheet: 2 of 2