T&S BRASS AND BRONZE WORKS, INC.

2 Saddleback Cove / P.O. Box 1088
Travelers Rest, SC 29690

Travelers Rest, SC: 800-476-4103 • Simi Valley, CA: 800-423-0150 • Fax: 864-834-3518 • www.tsbrass.com

Model No.
B-1146-04-CR-WS

Item No.

ADA Compliant

This Space for Architect/Engineer Approval

Job Name_____Date_____

Model Specified_____ Quantity_____

Customer/Wholesaler_____

Contractor_____

Architect/Engineer_____

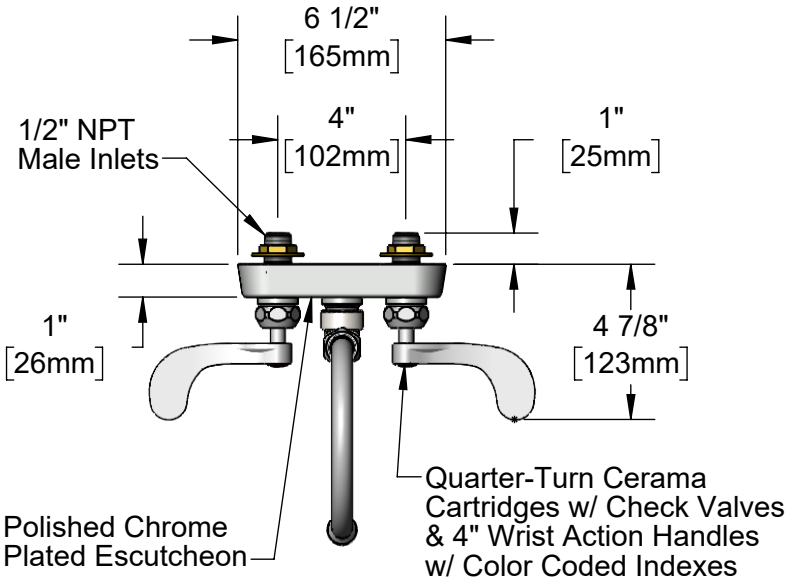

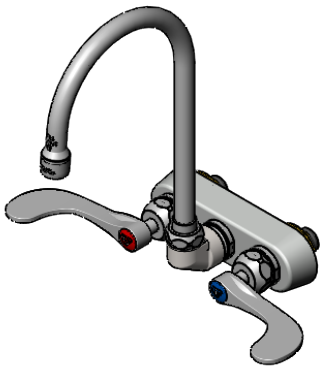

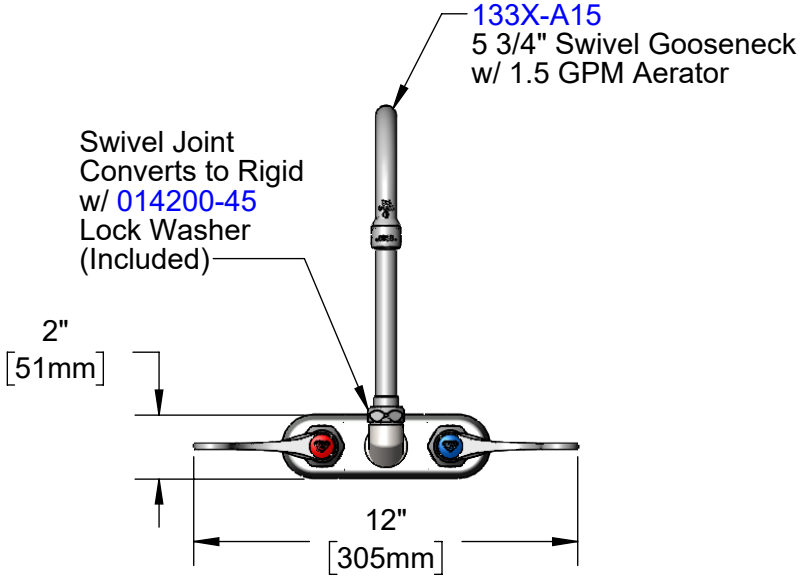

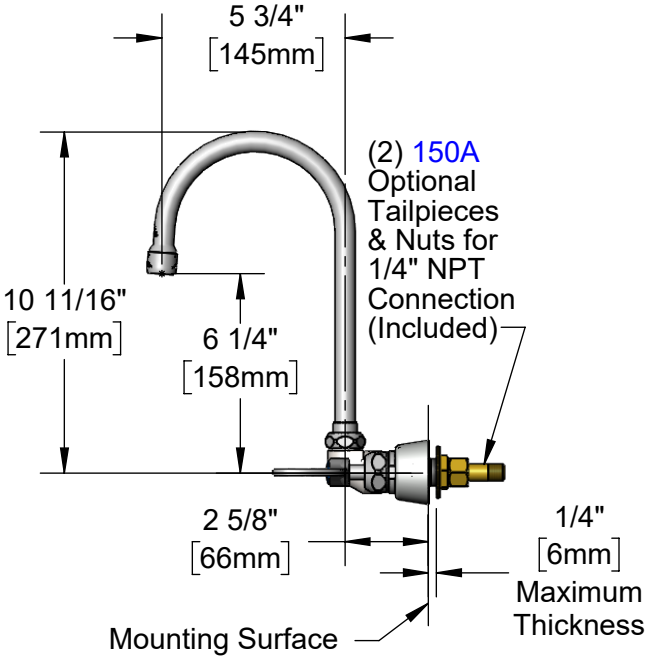

Rough-In Requirement:
(2) ∅1" [25mm] Mounting Holes

Product Specifications:
4" Wall Mount Workboard Faucet, Quarter-Turn Cerama Cartridges w/ Check Valves, 4" Wrist Action Handles, 5 3/4" Swivel Gooseneck, 1.5 GPM Aerator & 1/2" NPT Male Inlets

Product Compliance:
ASME A112.18.1 / CSA B125.1
NSF 61 - Section 9
NSF 372 (Low Lead Content)
ANSI A117.1 (ADA)
EPA WaterSense

Drawn:	Checked:	Approved:	Date:	Scale:	Sheet:
CDS	KJG	JHB	03/14/23	1:6	1 of 2

T&S BRASS AND BRONZE WORKS, INC.

2 Saddleback Cove / P.O. Box 1088
Travelers Rest, SC 29690

Travelers Rest, SC: 800-476-4103 • Simi Valley, CA: 800-423-0150 • Fax: 864-834-3518 • www.tsbrass.com

Model No.
B-1146-04-CR-WS

Item No.

ITEM NO.	SALES NO.	DESCRIPTION
1	B-0199-01-WS	1.5 GPM Aerator, 55/64-27 Female
2	133X-A15	5 3/4" Swivel Gooseneck w/ 1.5 GPM Aerator
3	009538-45	Swivel Washer
4	011429-45	Swivel Sleeves (2)
5	001074-45	O-Ring
6	012395-25NS	Quarter-Turn New Style Cerama Cartridge w/ Check Valve, LTC
7	150A	1/4" NPT Tailpiece & Nut
8	002954-45	Shank Lock Nut
9	000999-45	Brass Lock Washer
10	019374-40	B-1110 Eterna Workboard Escutcheon
11	019376-40	Escutcheon Lock Nut
12	012394-25NS	Quarter-Turn New Style Cerama Cartridge w/ Check Valve, RTC
13	000925-45	Lab Handle Screw
14	018506-19NS	Blue Button Index, Press-in
15	B-WH4C-NS	Wrist Action Handle, Blue Index & Screw
16	001040-45	Washer, 3/4 ID x 15/16 OD x 1/8 thick
17	000082-40	B-1100 Knob
18	014200-45	Star Washer, Anti-Rotation
19	001193-19NS	Red Button Index, Press-in
20	B-WH4-NS	Wrist Action Handle - New Style
21	B-WH4H-NS	Wrist Action Handle, Red Index & Screw

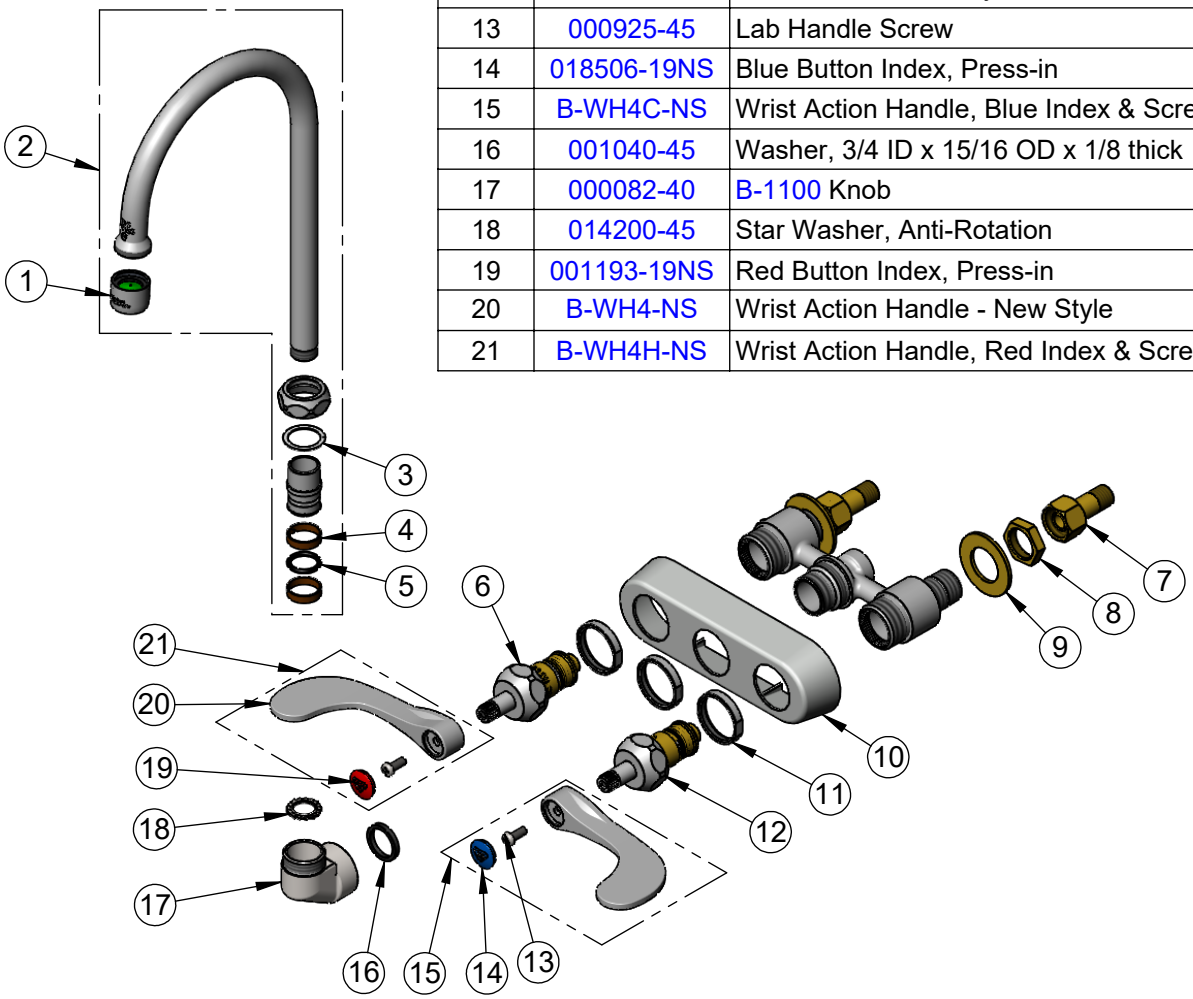

Product Specifications:
4" Wall Mount Workboard Faucet, Quarter-Turn Cerama Cartridges w/ Check Valves, 4" Wrist Action Handles, 5 3/4" Swivel Gooseneck, 1.5 GPM Aerator & 1/2" NPT Male Inlets

Product Compliance:
ASME A112.18.1 / CSA B125.1
NSF 61 - Section 9
NSF 372 (Low Lead Content)
ANSI A117.1 (ADA)
EPA WaterSense

Drawn:	Checked:	Approved:	Date:	Scale:	Sheet:
CDS	KJG	JHB	03/14/23	NTS	2 of 2