T&S BRASS AND BRONZE WORKS, INC.

2 Saddleback Cove / P.O. Box 1088
Travelers Rest, SC 29690

Travelers Rest, SC: 800-476-4103 • Simi Valley, CA: 800-423-0150 • Fax: 864-834-3518 • www.tsbrass.com

Model No.

B-0599-CR

Item No.

This Space for Architect/Engineer Approval

Job Name_____Date_____

Model Specified_____ Quantity_____

Customer/Wholesaler_____

Contractor_____

Architect/Engineer_____

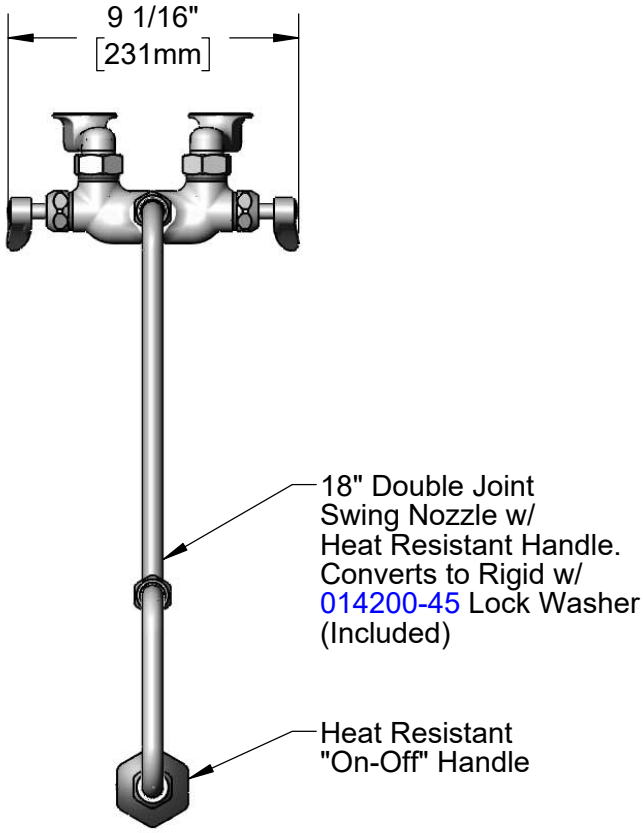

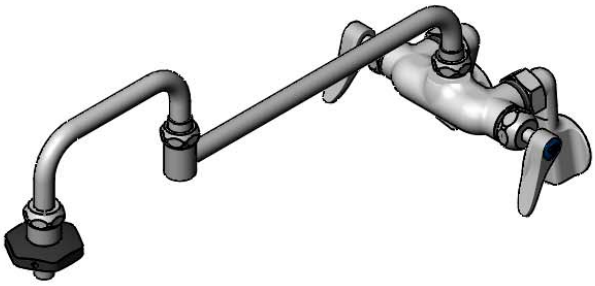

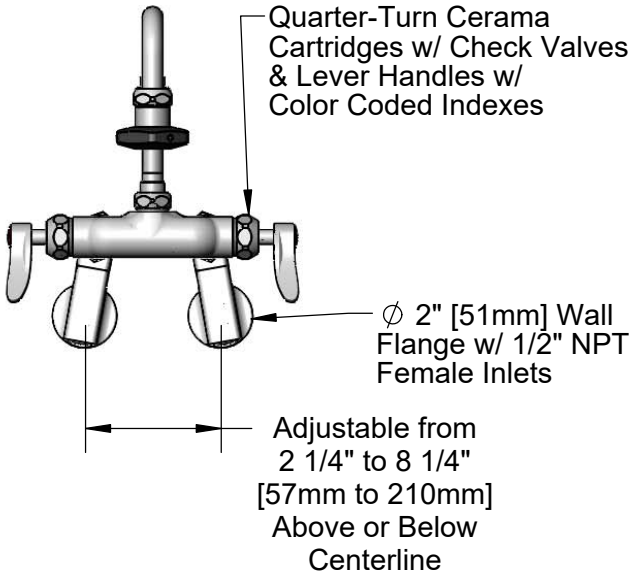

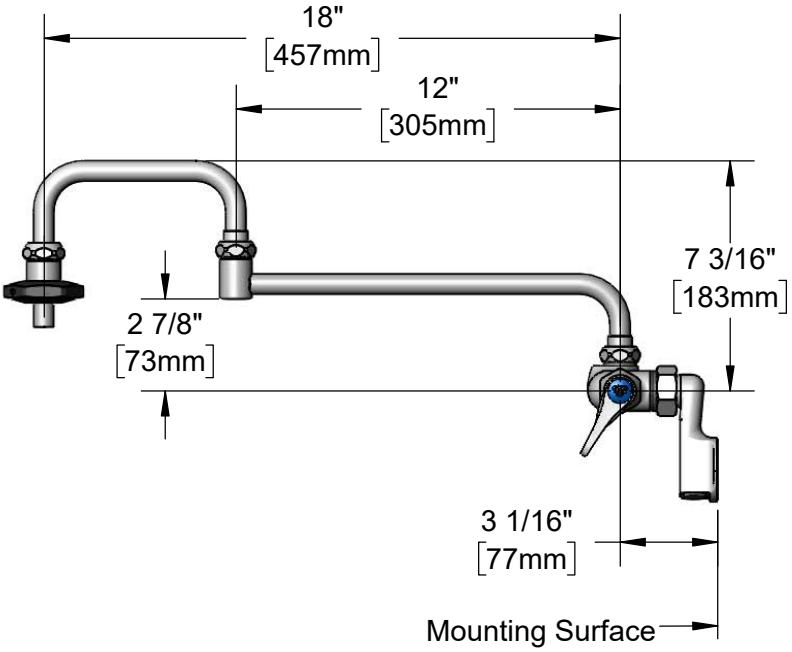

Product Specifications:

Adjustable Wall Mount Mixing Faucet, Quarter-Turn Cerama Cartridges w/ Check Valves, Lever Handles, 18" Double Joint Swing Nozzle w/ Heat Resistant Handle & 1/2" NPT Female Adjsutable Arm Inlets

Product Compliance:

ASME A112.18.1 / CSA B125.1
NSF 61 - Section 9
NSF 372 (Low Lead Content)

Drawn: JBB	Checked: JRM	Approved: JHB	Date: 12/20/21	Scale: 1:6	Sheet: 1 of 2

T&S BRASS AND BRONZE WORKS, INC.

2 Saddleback Cove / P.O. Box 1088
Travelers Rest, SC 29690

Travelers Rest, SC: 800-476-4103 • Simi Valley, CA: 800-423-0150 • Fax: 864-834-3518 • www.tsbrass.com

Model No.

B-0599-CR

Item No.

ITEM NO.	SALES NO.	DESCRIPTION
1	000936-45	Handle Set Screw
2	001126-20	Heat Resistant Handle w/ (2) Screws
3	035A	Outlet w/ Black Heat Resistant Handle
4	000587-25	Spout Body
5	001498-25	Spout
6	001089-45	Seal
7	003426-45	O-Ring
8	002848-40	18" Double Joint Swing Nozzle w/ Heat Resistant Handle
9	002870-40	6" Double Joint Nozzle Front Section
10	009538-45	Swivel Washer
11	011429-45	Swivel Sleeves (2)
12	001074-45	O-Ring
13	002871-40	12" Double Joint Nozzle Back Section
14	001019-45	Coupling Nut Washer
15	00GG	1/2" NPT Female Adjustable Arm Flange
16	000925-45	Lab Handle Screw
17	018506-19NS	Blue Button Index, Press-in
18	012395-25NS	Quarter-Turn Cerama Cartridge w/ Check Valve, LTC
19	012447-25NS	Quarter-Turn Cerama Cartridge w/ Check Valve, Handle, Blue Index & Screw, LTC
20	012446-25NS	Quarter-Turn Cerama Cartridge w/ Check Valve, Handle, Red Index & Screw, RTC
21	012394-25NS	Quarter-Turn Cerama Cartridge w/ Check Valve, RTC
22	001638-45NS	Lever Handle (New Style)
23	001193-19NS	Red Button Index, Press-in

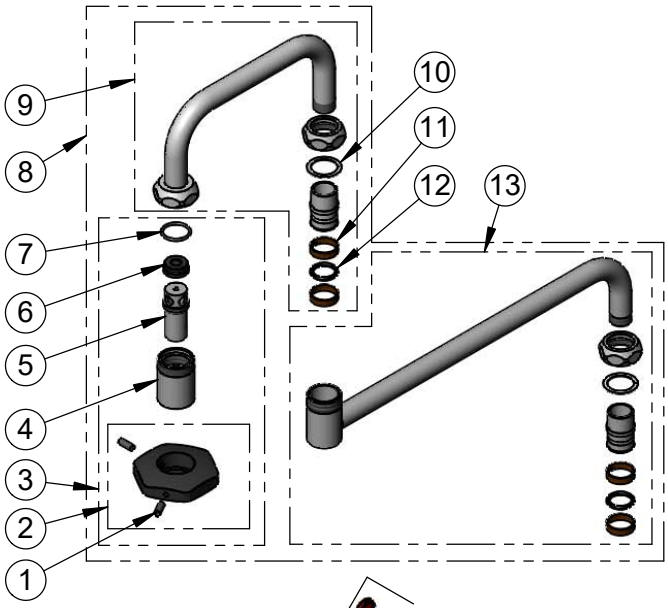

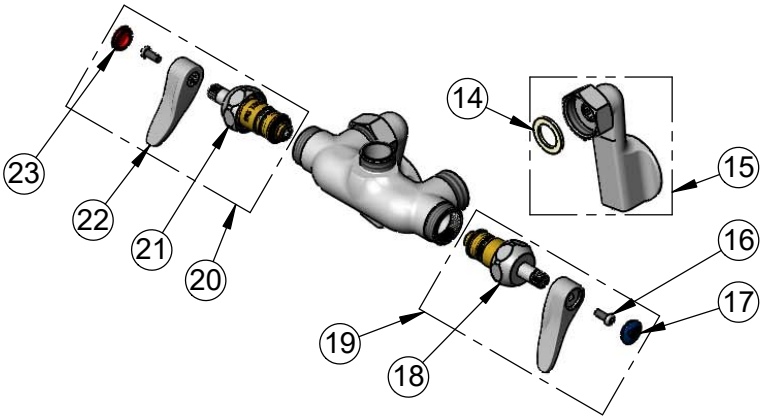

Product Specifications:

Adjustable Wall Mount Mixing Faucet, Quarter-Turn Cerama Cartridges w/ Check Valves, Lever Handles, 18" Double Joint Swing Nozzle w/ Heat Resistant Handle & 1/2" NPT Female Adjsutable Arm Inlets

Product Compliance:

ASME A112.18.1 / CSA B125.1
NSF 61 - Section 9
NSF 372 (Low Lead Content)

Drawn: JBB	Checked: JRM	Approved: JHB	Date: 12/20/21	Scale: NTS	Sheet: 2 of 2