T&S BRASS AND BRONZE WORKS, INC.

2 Saddleback Cove / P.O. Box 1088
Travelers Rest, SC 29690

Travelers Rest, SC: 800-476-4103 • Simi Valley, CA: 800-423-0150 • Fax: 864-834-3518 • www.tsbrass.com

Model No.
B-0330CR-PRISON

Item No.

ADA Compliant

This Space for Architect/Engineer Approval

Job Name_____Date_____

Model Specified_____ Quantity_____

Customer/Wholesaler_____

Contractor_____

Architect/Engineer_____

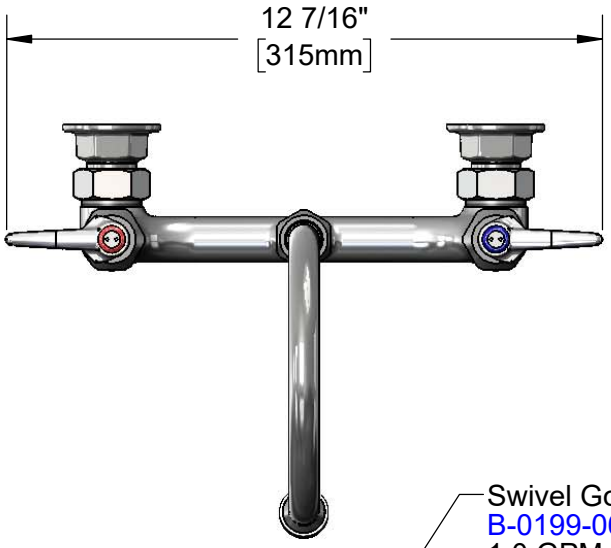

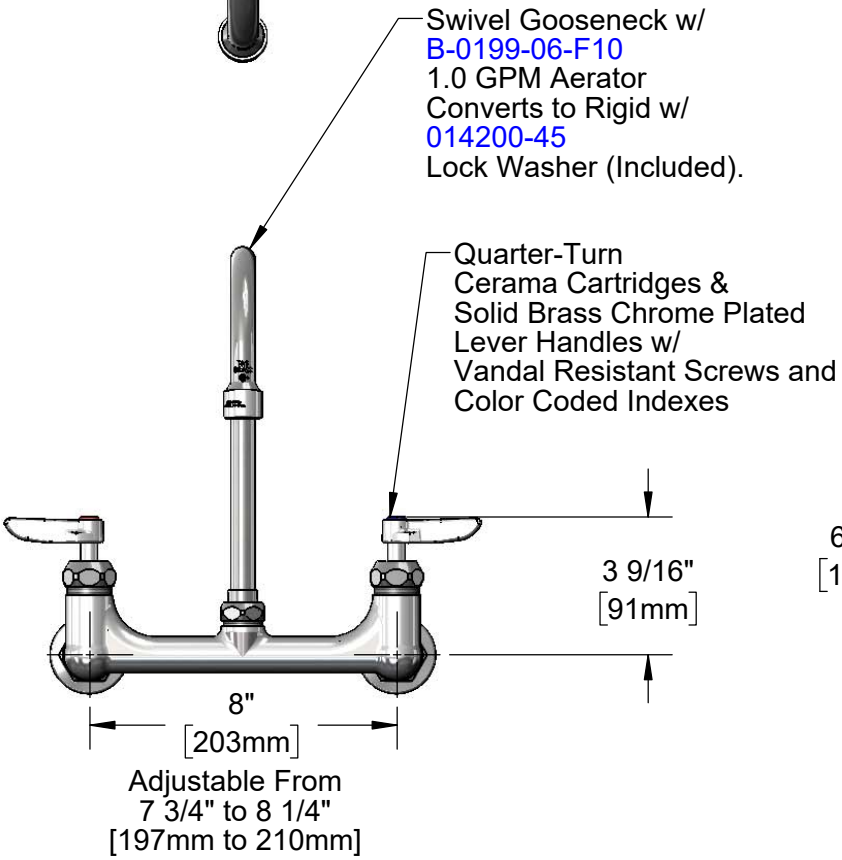

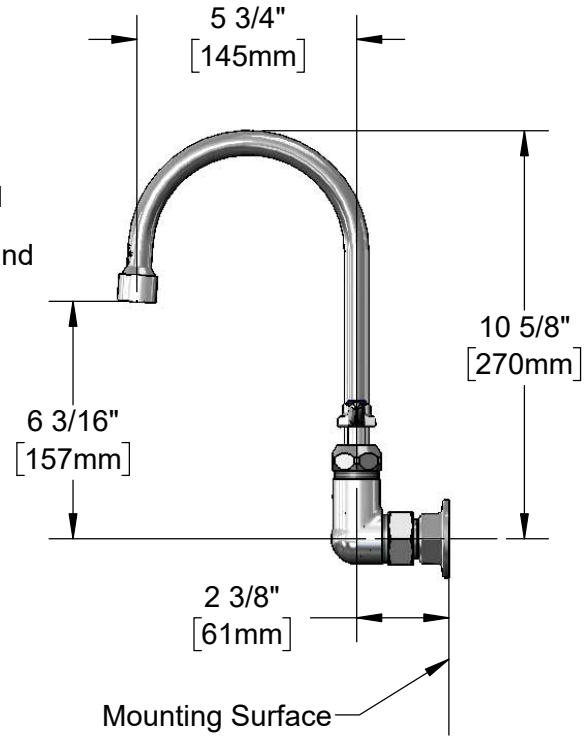

Product Specifications:

8" Wall Mount Mixing Faucet, Quarter-Turn Cerama Cartridges w/ Check Valves, Solid Brass Chrome Plated Lever Handles, 5 3/4" Swivel/Rigid Gooseneck w/ 1.0 GPM Vandal Resistant Aerator & 1/2" NPT Female Inlets

Product Compliance:

ASME A112.18.1 / CSA B125.1
NSF 61 - Section 9
NSF 372 (Low Lead Content)
ANSI A117.1 (ADA)

Drawn: MRC	Checked: JRM	Approved: JHB	Date: 01/22/18	Scale: 1:5	Sheet: 1 of 2

T&S BRASS AND BRONZE WORKS, INC.

2 Saddleback Cove / P.O. Box 1088
Travelers Rest, SC 29690

Travelers Rest, SC: 800-476-4103 • Simi Valley, CA: 800-423-0150 • Fax: 864-834-3518 • www.tsbrass.com

Model No.
B-0330CR-PRISON

Item No.

ITEM NO.	SALES NO.	DESCRIPTION
1	B-0199-06-F10	VR Aerator, 1.0 GPM, 55/64-27 Female
2	009538-45	Swivel Washer
3	011429-45	Swivel Sleeves (2)
4	001074-45	O-Ring
5	014200-45	Star Washer, Anti-Rotation
6	VRS-1	VR Lever Handle Screw (2) w/ Spanner Bit
7	001660-45	Blue Index-CW
8	012395-25NS	Quarter-Turn Cerama Cartridge w/ Check Valve, LTC
9	00AA	1/2" NPT Female Eccentric Flange
10	001019-45	Coupling Nut Washer
11	012394-25NS	Quater-Turn Cerama Cartridge w/ Check Valve, RTC
12	010027-40	Solid Brass Chrome Plated Lever Handle
13	001661-45	Red Index-HW

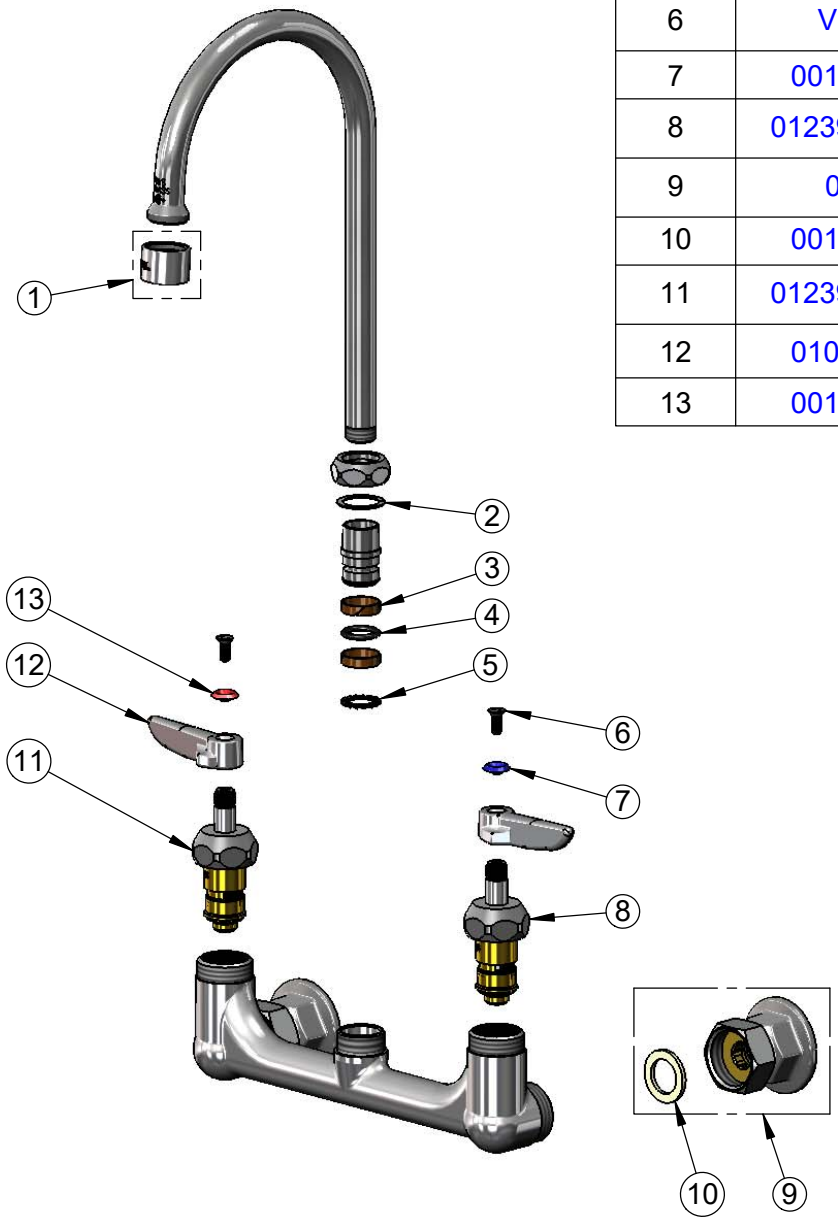

014074-45
Spanner Bit

015425-45
Vandal Resistant Key

Product Specifications:
8" Wall Mount Mixing Faucet, Quarter-Turn Cerama Cartridges w/ Check Valves, Solid Brass Chrome Plated Lever Handles, 5 3/4" Swivel/Rigid Gooseneck w/ 1.0 GPM Vandal Resistant Aerator & 1/2" NPT Female Inlets

Product Compliance:
ASME A112.18.1 / CSA B125.1
NSF 61 - Section 9
NSF 372 (Low Lead Content)
ANSI A117.1 (ADA)

Drawn: MRC	Checked: JRM	Approved: JHB	Date: 01/22/18	Scale: NTS	Sheet: 2 of 2