# T&S BRASS AND BRONZE WORKS, INC.

2 Saddleback Cove / P.O. Box 1088
Travelers Rest, SC 29690

Travelers Rest, SC: 800-476-4103 • Simi Valley, CA: 800-423-0150 • Fax: 864-834-3518 • www.tsbrass.com

Model No.
**B-0301-W4-QT-WS**

Item No.

ADA Compliant



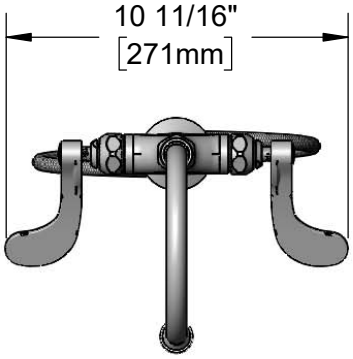


This Space for Architect/Engineer Approval

Job Name_____Date_____

Model Specified_____ Quantity_____

Customer/Wholesaler_____

Contractor_____

Architect/Engineer_____

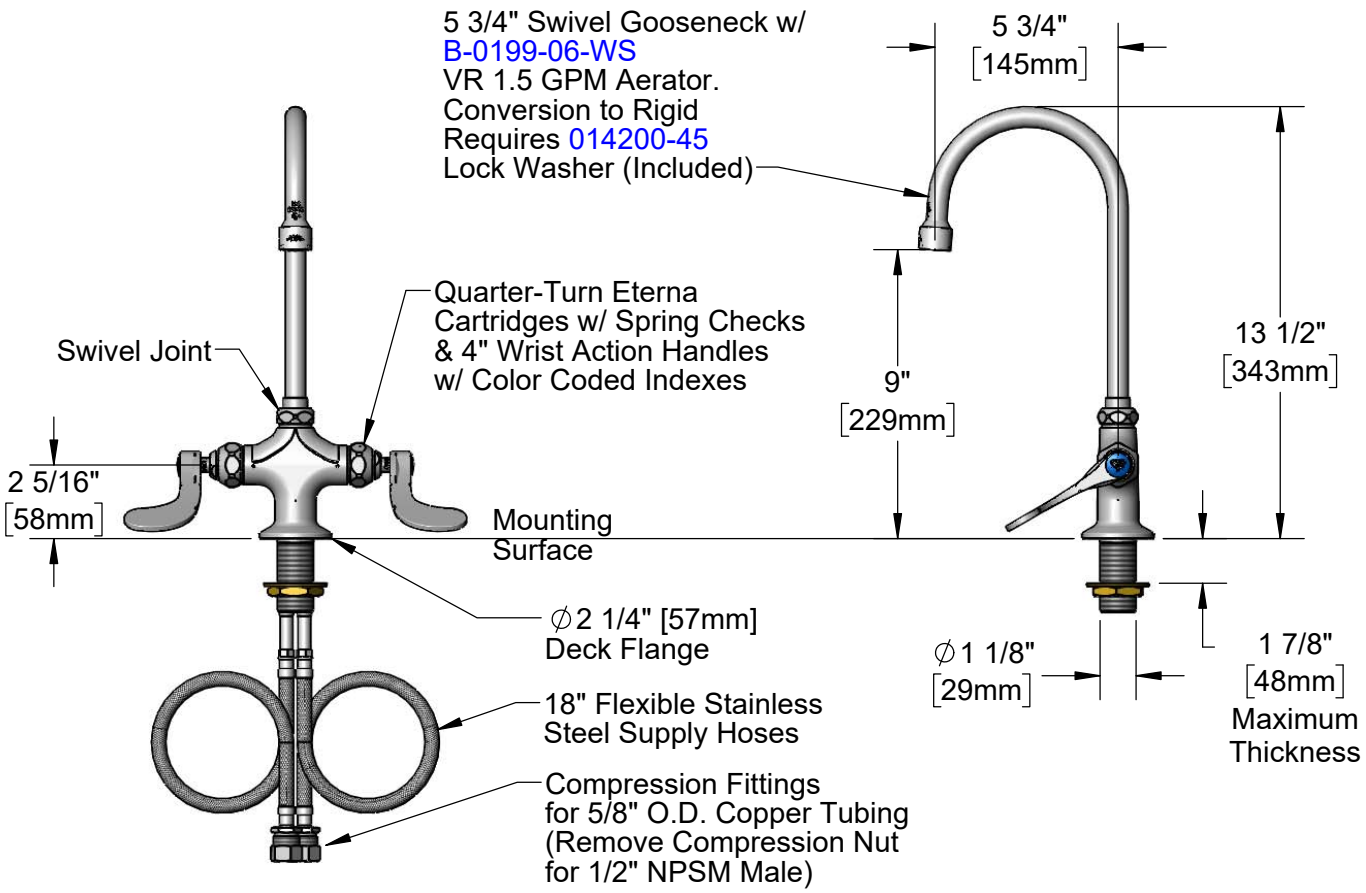


Rough-In Requirement:
∅1 1/2" [38mm] Mounting Hole

Product Specifications:
Single Hole Deck Mount Mixing Faucet, Quarter-Turn Eterna Cartridges w/ Spring Checks, 5 3/4" Swivel Gooseneck w/ 1.5 GPM Vandal Resistant Aerator, 4" Wrist Action Handles & 18" Flexible Stainless Steel Supply Hoses w/ 1/2" NPSM Male Inlets

Product Compliance:
ASME A112.18.1 / CSA B125.1
NSF 61 - Section 9
NSF 372 (Low Lead Content)
ANSI A117.1 (ADA)
EPA WaterSense

| Drawn: | KJG | Checked: | MRC | Approved: | JHB | Date: | 10/10/19 | Scale: | 1:6 | Sheet: | 1 of 2 |
|---|---|---|---|---|---|---|---|---|---|---|---|

# T&S BRASS AND BRONZE WORKS, INC.

2 Saddleback Cove / P.O. Box 1088
Travelers Rest, SC 29690

Travelers Rest, SC: 800-476-4103 • Simi Valley, CA: 800-423-0150 • Fax: 864-834-3518 • www.tsbrass.com


Model No.
**B-0301-W4-QT-WS**

Item No.

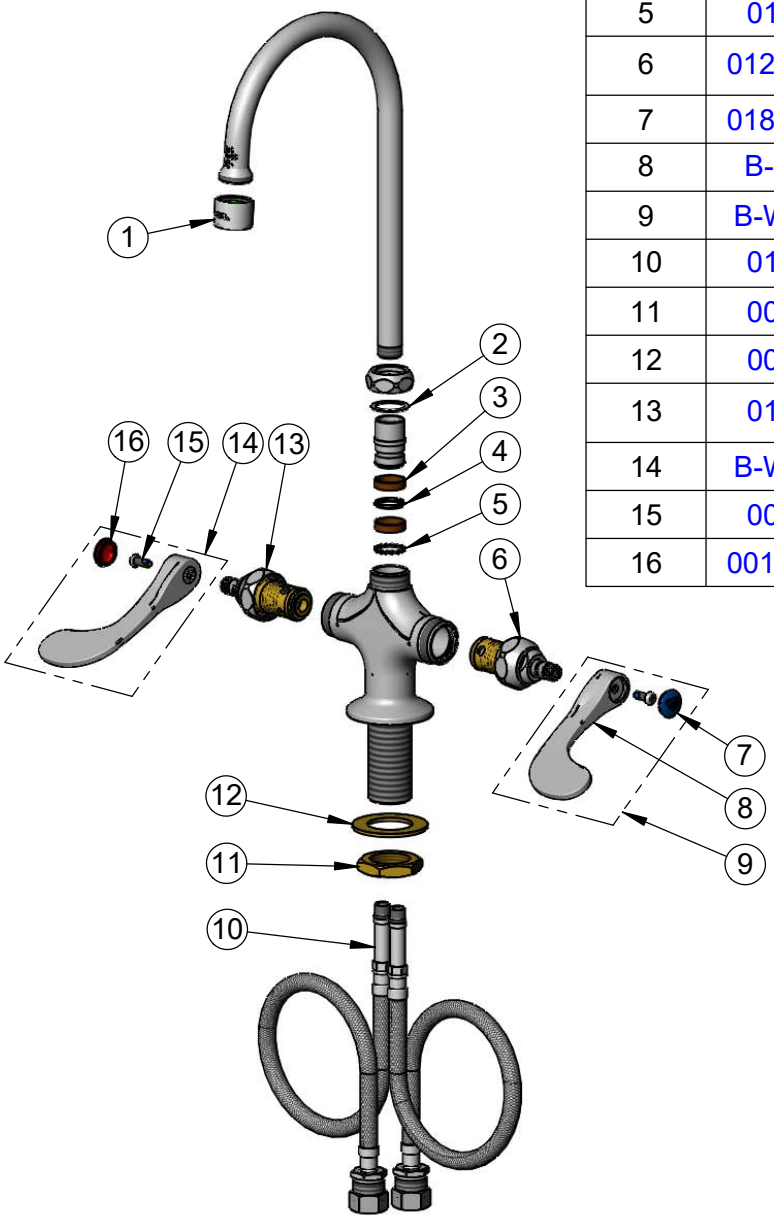


| ITEM NO. | SALES NO. | DESCRIPTION |
|---|---|---|
| 1 | B-0199-06-WS | VR 1.5 GPM Aerator, 55/64-27 UN Female w/ Key |
| 2 | 009538-45 | Swivel Washer |
| 3 | 011429-45 | Swivel Sleeves (2) |
| 4 | 001074-45 | O-Ring |
| 5 | 014200-45 | Star Washer, Anti-Rotation |
| 6 | 012442-40NS | Quarter-Turn Eterna Cartridge w/ Spring Check, LTC |
| 7 | 018506-19NS | Blue Button Index, Press-in |
| 8 | B-WH4-NS | Wrist Action Handle - New Style |
| 9 | B-WH4C-NS | Wrist Action Handle, Blue Index & Screw |
| 10 | 012534-45 | 18" Flexible Supply Hoses (2) |
| 11 | 000965-45 | Lock Nut |
| 12 | 002290-45 | Lock Washer |
| 13 | 012443-40 | Quarter-Turn Eterna Cartridge w/ Spring Check, RTC |
| 14 | B-WH4H-NS | Wrist Action Handle, Red Index & Screw |
| 15 | 000925-45 | Lab Handle Screw |
| 16 | 001193-19NS | Red Button Index, Press-in |



015425-45
Vandal Resistant Key

Product Specifications:
Single Hole Deck Mount Mixing Faucet, Quarter-Turn Eterna Cartridges w/ Spring Checks, 5 3/4" Swivel Gooseneck w/ 1.5 GPM Vandal Resistant Aerator, 4" Wrist Action Handles & 18" Flexible Stainless Steel Supply Hoses w/ 1/2" NPSM Male Inlets

Product Compliance:
ASME A112.18.1 / CSA B125.1
NSF 61 - Section 9
NSF 372 (Low Lead Content)
ANSI A117.1 (ADA)
EPA WaterSense

| Drawn: | Checked: | Approved: | Date: | Scale: | Sheet: |
|---|---|---|---|---|---|
| KJG | MRC | JHB | 10/10/19 | NTS | 2 of 2 |