T&S BRASS AND BRONZE WORKS, INC.

2 Saddleback Cove / P.O. Box 1088
Travelers Rest, SC 29690

Travelers Rest, SC: 800-476-4103 • Simi Valley, CA: 800-423-0150 • Fax: 864-834-3518 • www.tsbrass.com

Model No.
B-0230-187XWSC4

Item No.

ADA Compliant

This Space for Architect/Engineer Approval

Job Name_____Date_____

Model Specified_____ Quantity_____

Customer/Wholesaler_____

Contractor_____

Architect/Engineer_____

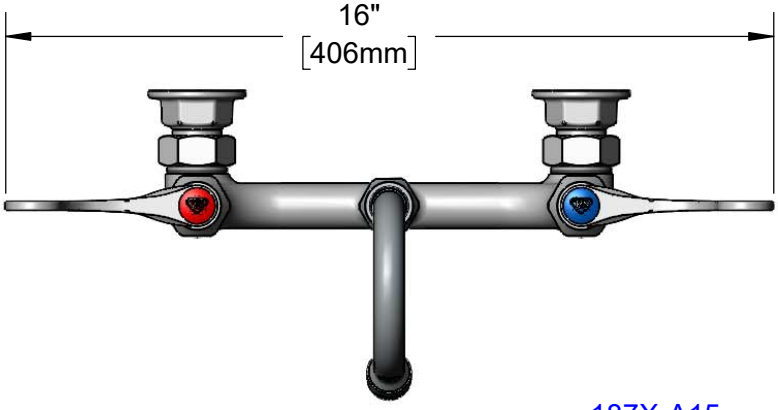

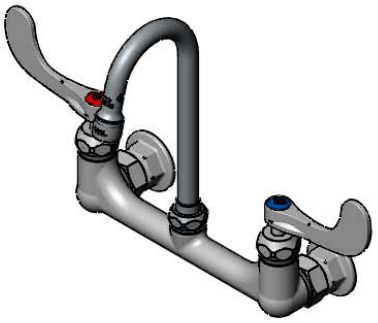

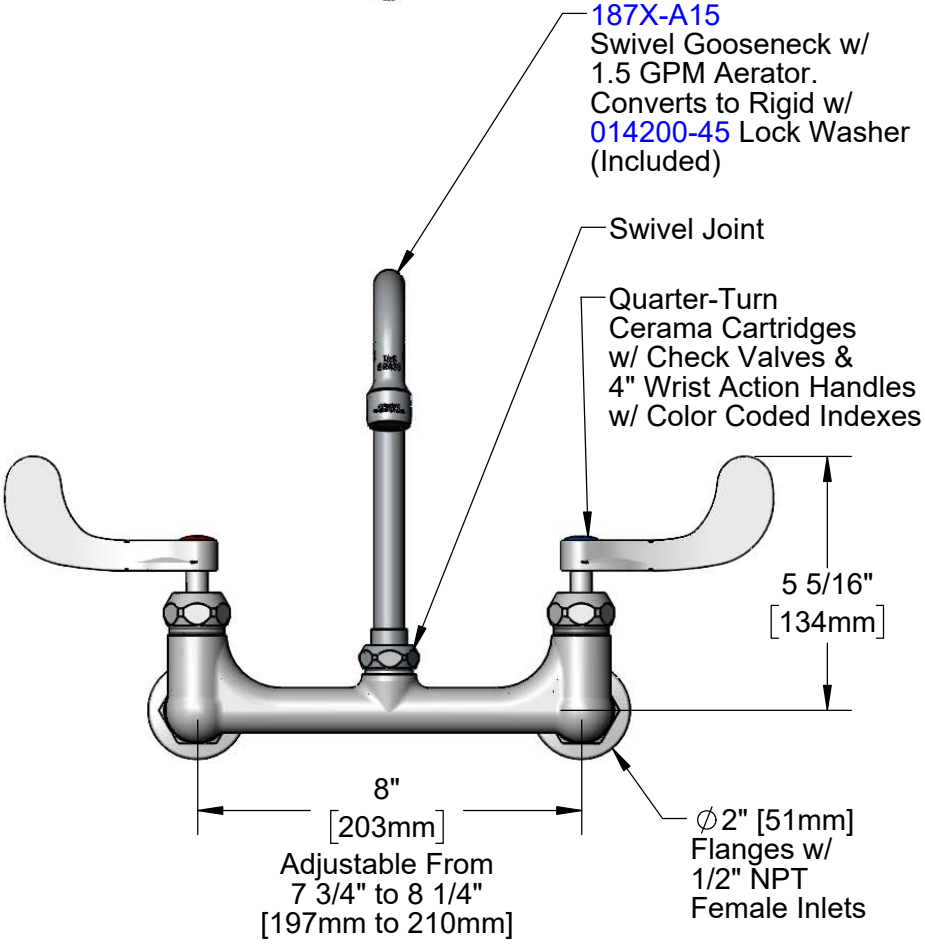

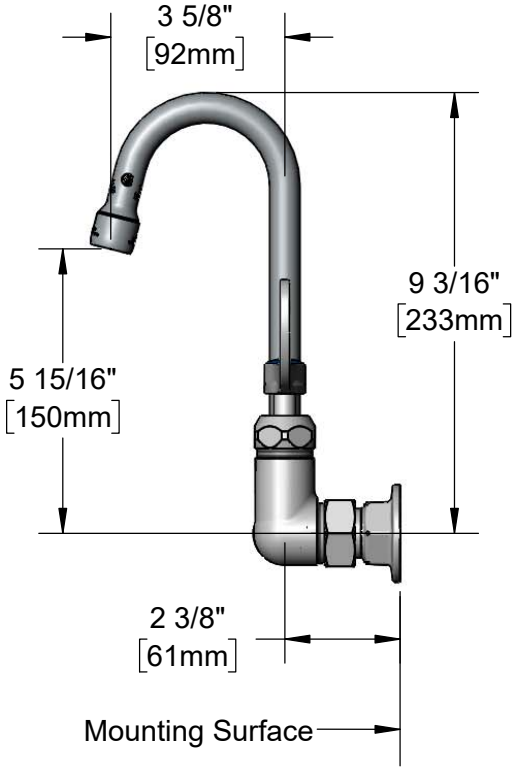

Product Specifications:
8" Wall Mount Mixing Faucet, Quarter-Turn Cerama Cartridges w/ Check Valves, 4" Wrist Action Handles, 3 5/8" Swivel Gooseneck w/ 1.5 GPM Aerator & 1/2" NPT Female Inlets

Product Compliance:
ASME A112.18.1 / CSA B125.1
NSF 61 - Section 9
NSF 372 (Low Lead Content)
ANSI A117.1 (ADA)

Drawn: KJG	Checked: MRC	Approved: JHB	Date: 07/25/19	Scale: 1:4	Sheet: 1 of 2

T&S BRASS AND BRONZE WORKS, INC.

2 Saddleback Cove / P.O. Box 1088
Travelers Rest, SC 29690

Travelers Rest, SC: 800-476-4103 • Simi Valley, CA: 800-423-0150 • Fax: 864-834-3518 • www.tsbrass.com

Model No.
B-0230-187XWSC4

Item No.

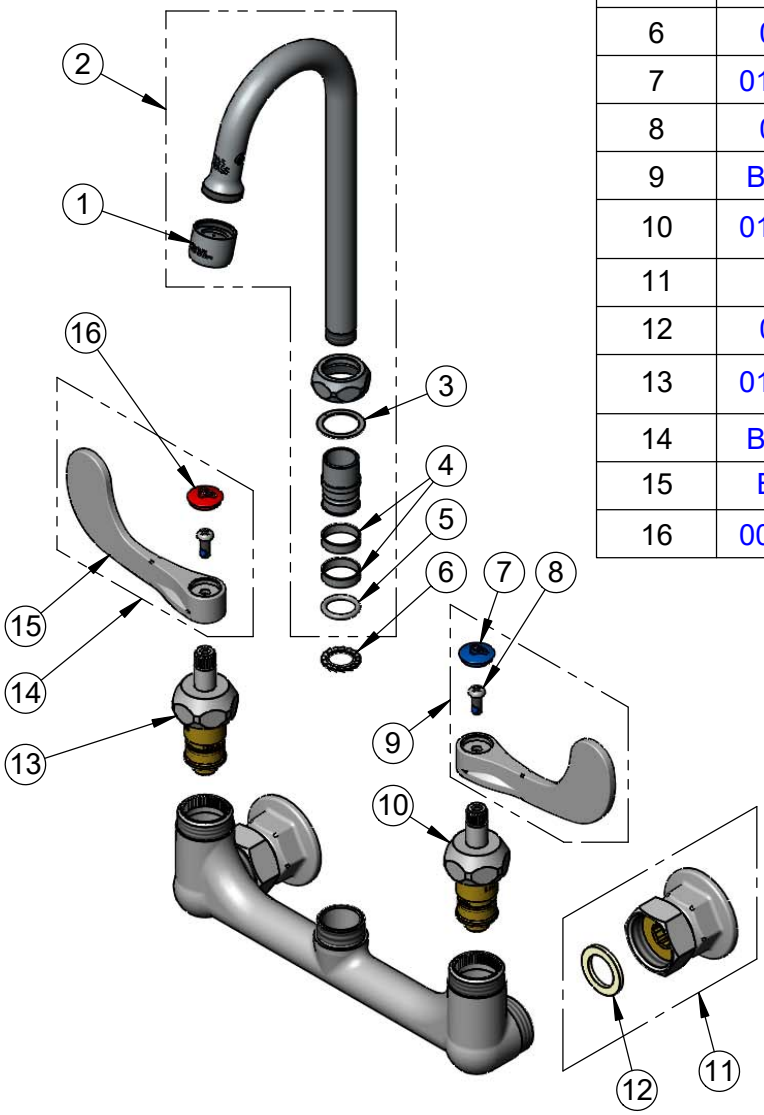

ITEM NO.	SALES NO.	DESCRIPTION
1	B-0199-01-WS	1.5 GPM Aerator, 55/64-27 Female
2	187X-A15	3 5/8" Swivel Gooseneck w/ 1.5 GPM Aerator
3	009538-45	Swivel Washer
4	011429-45	Swivel Sleeves (2)
5	001074-45	O-Ring
6	014200-45	Star Washer, Anti-Rotation
7	018506-19NS	Blue Button Index, Press-in
8	000925-45	Lab Handle Screw
9	B-WH4C-NS	Wrist Action Handle, Blue Index & Screw
10	012395-25NS	Quarter-Turn Cerama Cartridge w/ Check Valve, LTC
11	00AA	1/2" NPT Female Eccentric Flange
12	001019-45	Coupling Nut Washer
13	012394-25NS	Quarter-Turn Cerama Cartridge w/ Check Valve, RTC
14	B-WH4H-NS	Wrist Action Handle, Red Index & Screw
15	B-WH4-NS	Wrist Action Handle - New Style
16	001193-19NS	Red Button Index, Press-in

Product Specifications:
8" Wall Mount Mixing Faucet, Quarter-Turn Cerama Cartridges w/ Check Valves, 4" Wrist Action Handles, 3 5/8" Swivel Gooseneck w/ 1.5 GPM Aerator & 1/2" NPT Female Inlets

Product Compliance:
ASME A112.18.1 / CSA B125.1
NSF 61 - Section 9
NSF 372 (Low Lead Content)
ANSI A117.1 (ADA)

Drawn:	KJG	Checked:	MRC	Approved:	JHB	Date:	07/25/19	Scale:	NTS	Sheet:	2 of 2