T&S BRASS AND BRONZE WORKS, INC.

2 Saddleback Cove / P.O. Box 1088
Travelers Rest, SC 29690

Travelers Rest, SC: 800-476-4103 • Simi Valley, CA: 800-423-0150 • Fax: 864-834-3518 • www.tsbrass.com

Model No.

B-0212-F05

Item No.

This Space for Architect/Engineer Approval

Job Name_____Date_____

Model Specified_____ Quantity_____

Customer/Wholesaler_____

Contractor_____

Architect/Engineer_____

ADA Compliant





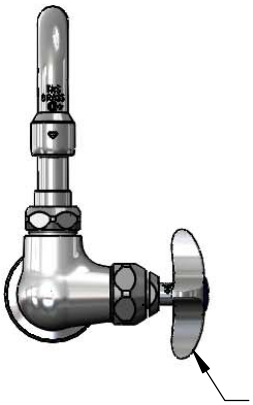

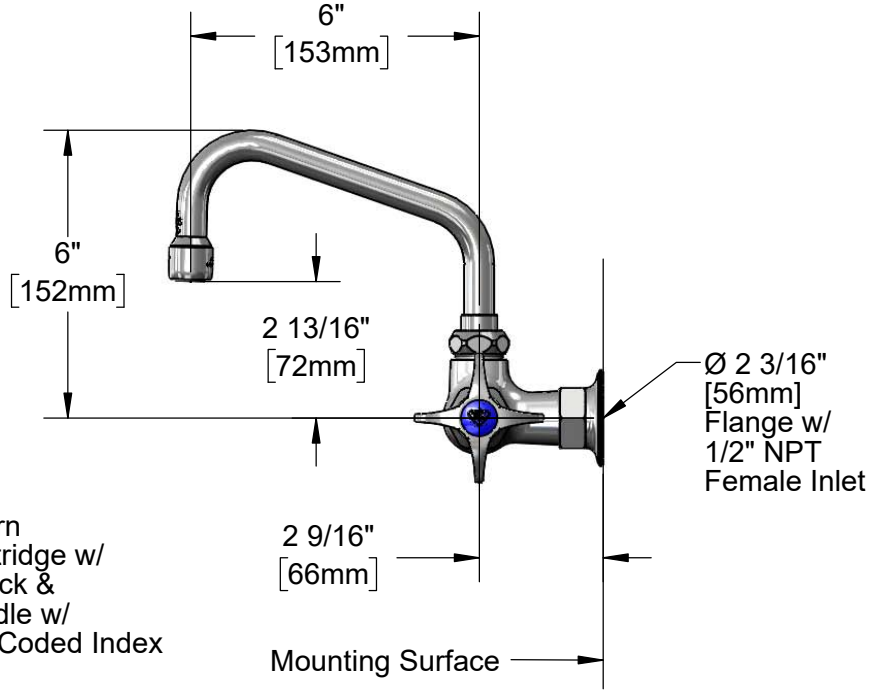

Product Specifications:

Single Hole Single Temperature Wall Mount Faucet, 4-Arm Handle, Eterna Cartridge, 6" Swing Nozzle, 0.5 GPM Non-Aerated Spray Device & 1/2" NPT Female Inlet

Product Compliance:

ASME A112.18.1 / CSA B125.1
NSF 61 - Section 9
NSF 372 (Low Lead Content)
ANSI A117.1 (ADA)

Drawn:	MRC	Checked:	JRM	Approved:	JHB	Date:	05/11/18	Scale:	1:4	Sheet:	1 of 2

T&S BRASS AND BRONZE WORKS, INC.

2 Saddleback Cove / P.O. Box 1088
Travelers Rest, SC 29690

Travelers Rest, SC: 800-476-4103 • Simi Valley, CA: 800-423-0150 • Fax: 864-834-3518 • www.tsbrass.com

Model No.

B-0212-F05

Item No.

ITEM NO.	SALES NO.	DESCRIPTION
1	B-0199-01-N05	0.5 GPM Spray Device, 55/64-27 Female
2	009538-45	Swivel Washer
3	011429-45	Swivel Sleeves (2)
4	001074-45	O-Ring
5	014200-45	Star Washer, Anti-Rotation
6	012443-40NS	Quarter-Turn Eterna Cartridge w/ Spring Check, RTC
7	002521-45NS	4-Arm Handle (New Style)
8	000925-45	Lab Handle Screw
9	018506-19NS	Blue Button Index, Press-in



Product Specifications:

Single Hole Single Temperature Wall Mount Faucet, 4-Arm Handle, Eterna Cartridge, 6" Swing Nozzle, 0.5 GPM Non-Aerated Spray Device & 1/2" NPT Female Inlet

Product Compliance:

ASME A112.18.1 / CSA B125.1
NSF 61 - Section 9
NSF 372 (Low Lead Content)
ANSI A117.1 (ADA)

Drawn:	Checked:	Approved:	Date:	Scale:	Sheet:
MRC	JRM	JHB	05/11/18	NTS	2 of 2