T&S BRASS AND BRONZE WORKS, INC.

2 Saddleback Cove / P.O. Box 1088
Travelers Rest, SC 29690

Travelers Rest, SC: 800-476-4103 • Simi Valley, CA: 800-423-0150 • Fax: 864-834-3518 • www.tsbrass.com

Model No.
B-0152-14-CRBCT

Item No.

This Space for Architect/Engineer Approval

Job Name_____Date_____

Model Specified_____ Quantity_____

Customer/Wholesaler_____

Contractor_____

Architect/Engineer_____

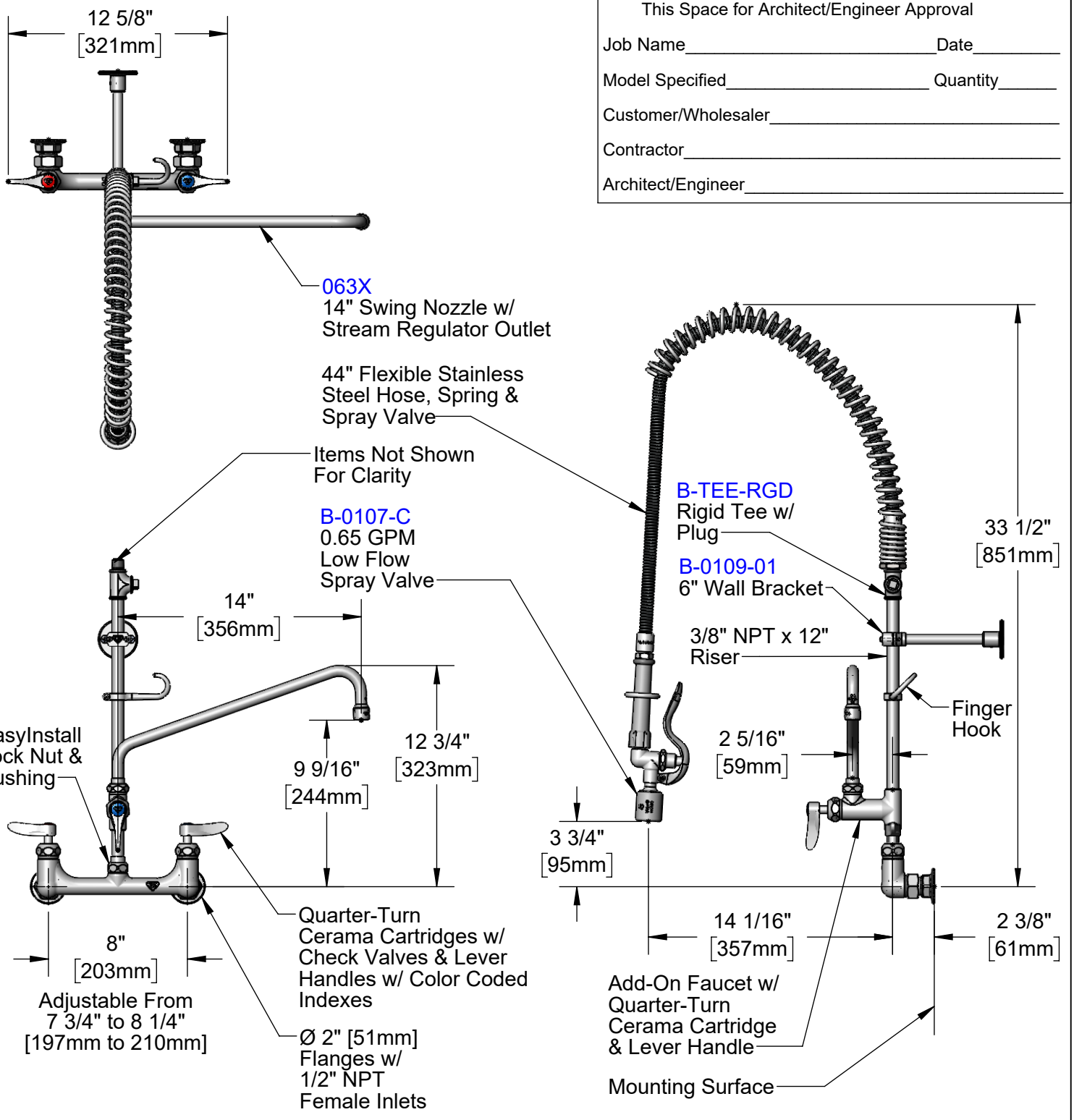

Product Specifications:

Pre-Rinse Unit: EasyInstall 8" Wall Mount Mixing Faucet, Quarter-Turn Cerama Cartridges w/ Check Valves, Lever Handles, Add-On Faucet, 14" Swing Nozzle, 44" Flexible Stainless Steel Hose, 0.65 GPM Low Flow Spray Valve, 6" Wall Bracket, Rigid Tee & 1/2" NPT Female Inlets

Product Compliance:

ASME A112.18.1 / CSA B125.1
NSF 61 - Section 9
NSF 372 (Low Lead Content)
2019 DOE PRSV - Class I

Drawn:	JDR	Checked:	CDS	Approved:	JHB	Date:	03/27/23	Scale:	1:8	Sheet:	1 of 1

T&S BRASS AND BRONZE WORKS, INC.

2 Saddleback Cove / P.O. Box 1088
Travelers Rest, SC 29690

Travelers Rest, SC: 800-476-4103 • Simi Valley, CA: 800-423-0150 • Fax: 864-834-3518 • www.tsbrass.com

Model No.
B-0152-14-CRBCT

Item No.

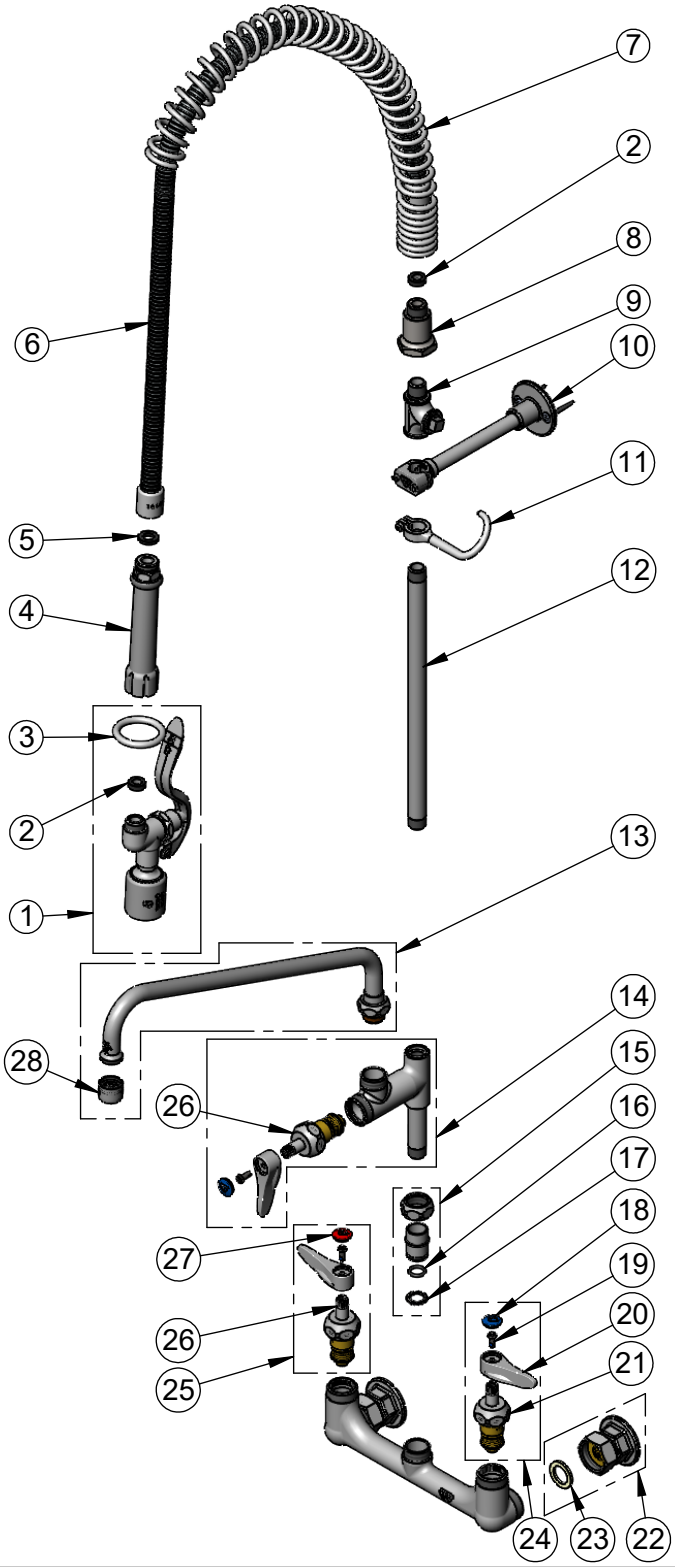

ITEM NO.	SALES NO.	DESCRIPTION
1	B-0107-C	0.65 GPM Low Flow Spray Valve
2	010476-45	#27 Washer
3	000907-45	Spray Valve Hold Down Ring
4	002987-40	Grip Handle
5	001014-45	Washer, Hose Barrel
6	B-0044-H2A	44" Flexible Stainless Steel Hose, Less Handle
7	000888-45	EasyInstall Overhead Spring
8	000821-40	Spring Body
9	B-TEE-RGD	Rigid Tee w/ Plug
10	B-0109-01	6" Wall Bracket
11	004R	Finger Hook
12	145X	3/8" NPT x 12" Riser
13	063X	14" Swing Nozzle
14	B-0155-CR-LN	EasyInstall Add-On Faucet- Less Nozzle
15	EZ-K	EasyInstall Kit: Nut, Bushing, O-ring & Lock Washer
16	001065-45	O-Ring, Size 2-112
17	014200-45	Star Washer, Anti-Rotation
18	018506-19NS	Blue Button Index, Press-in
19	000925-45	Lab Handle Screw
20	001638-45NS	Lever Handle (New Style)
21	012395-25NS	Quarter-Turn Cerama Cartridge w/ Check Valve, LTC
22	00AA	1/2" NPT Female Eccentric Flange
23	001019-45	Coupling Nut Washer
24	012447-25NS	Quarter-Turn Cerama Cartridge w/ Check Valve, Handle, Blue Index & Screw, LTC
25	012446-25NS	Quarter-Turn Cerama Cartridge w/ Check Valve, Handle, Red Index & Screw, RTC
26	012394-25NS	Quarter-Turn Cerama Cartridge w/ Check Valve, RTC
27	001193-19NS	Red Button Index, Press-in
28	B-PT	Full Flow Stream Regulator, 55/64-27

Product Specifications:

Pre-Rinse Unit: EasyInstall 8" Wall Mount Mixing Faucet, Quarter-Turn Cerama Cartridges w/ Check Valves, Lever Handles, Add-On Faucet, 14" Swing Nozzle, 44" Flexible Stainless Steel Hose, 0.65 GPM Low Flow Spray Valve, 6" Wall Bracket, Rigid Tee & 1/2" NPT Female Inlets

Product Compliance:

ASME A112.18.1 / CSA B125.1
NSF 61 - Section 9
NSF 372 (Low Lead Content)
2019 DOE PRSV - Class I

Drawn:	Checked:	Approved:	Date:	Scale:	Sheet:
JDR	CDS	JHB	03/27/23	NTS	2 of 2