T&S BRASS AND BRONZE WORKS, INC.

2 Saddleback Cove / P.O. Box 1088
Travelers Rest, SC 29690

Travelers Rest, SC: 800-476-4103 • Simi Valley, CA: 800-423-0150 • Fax: 864-834-3518 • www.tsbrass.com

Model No.
B-0152-12-CRVBJT

Item No.

This Space for Architect/Engineer Approval

Job Name_____Date_____

Model Specified_____ Quantity_____

Customer/Wholesaler_____

Contractor_____

Architect/Engineer_____

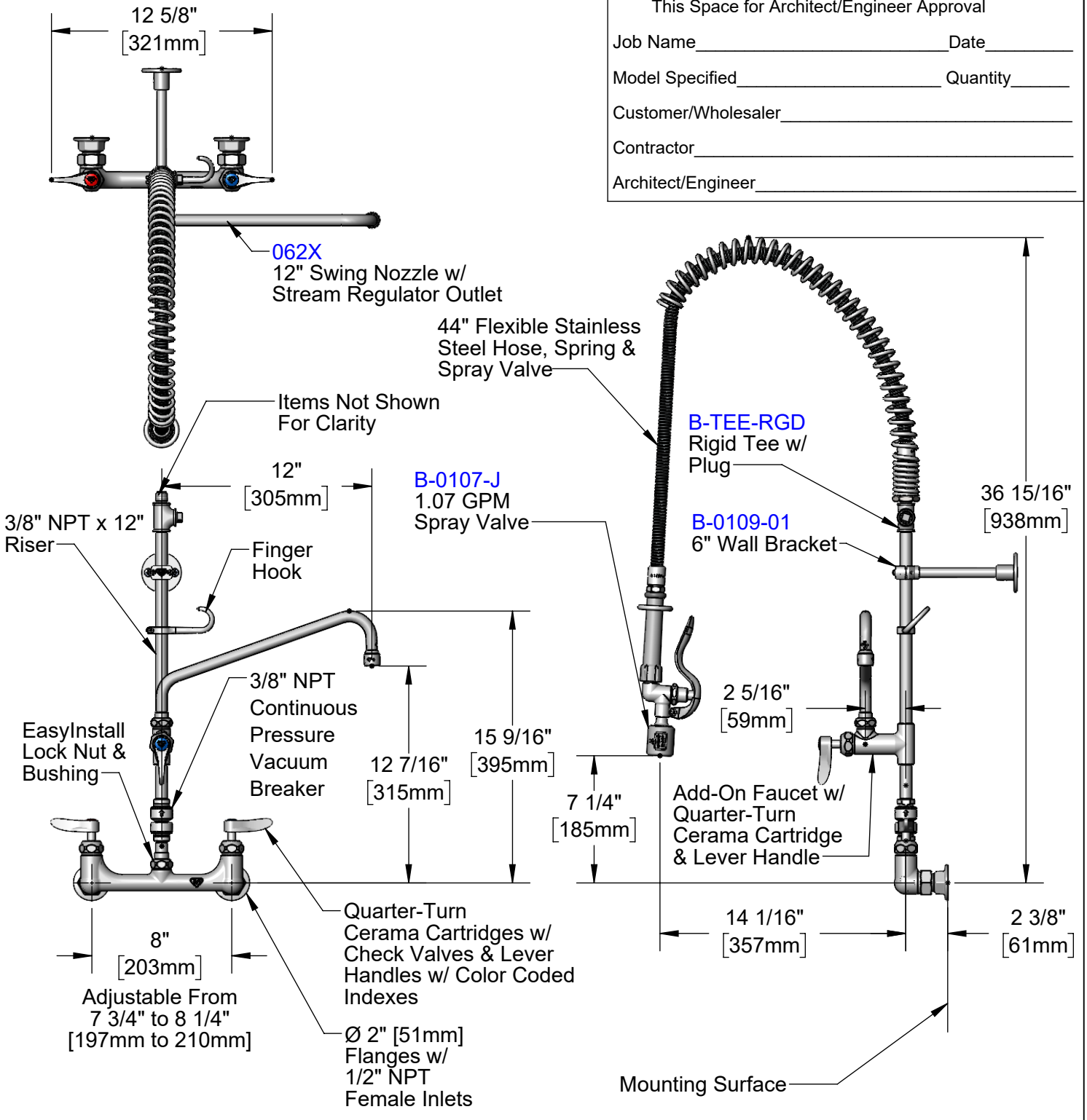

Product Specifications:

Pre-Rinse Unit: EasyInstall 8" Wall Mount Mixing Faucet, Quarter-Turn Cerama Cartridges w/ Check Valves, EasyInstall Vacuum Breaker, Lever Handles, Add-On Faucet, 12" Swing Nozzle, 44" Flexible Stainless Steel Hose, 1.07 GPM Spray Valve, 6" Wall Bracket, Rigid Tee & 1/2" NPT Female Inlets

Product Compliance:

ASME A112.18.1 / CSA B125.1
NSF 61 - Section 9
NSF 372 (Low Lead Content)
2019 DOE PRSV - Class II
CSA B64.8 (VB)

Drawn:	Checked:	Approved:	Date:	Scale:	Sheet:
CAB	JRM	JHB	07/03/24	1:8	1 of 2

T&S BRASS AND BRONZE WORKS, INC.

2 Saddleback Cove / P.O. Box 1088
Travelers Rest, SC 29690

Travelers Rest, SC: 800-476-4103 • Simi Valley, CA: 800-423-0150 • Fax: 864-834-3518 • www.tsbrass.com

Model No.
B-0152-12-CRVBJT

Item No.

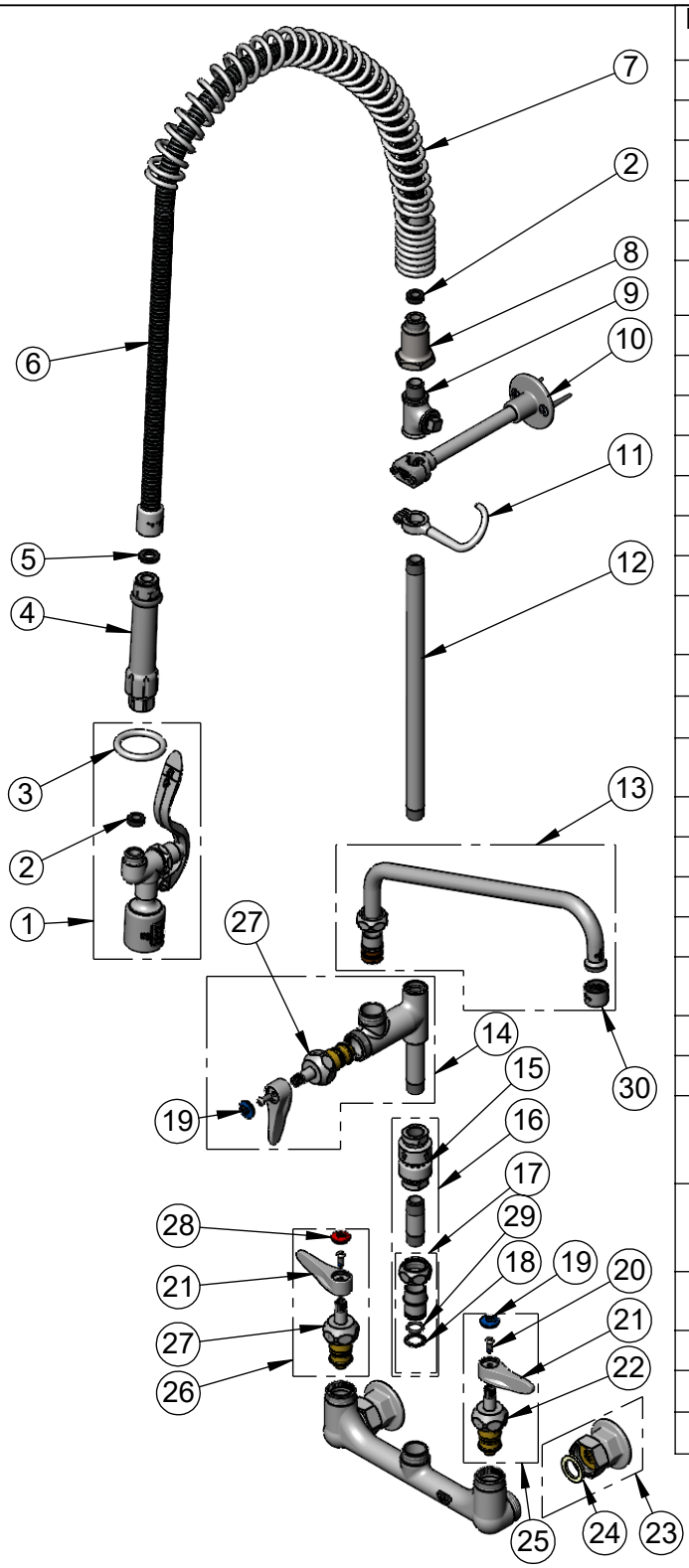

ITEM NO.	SALES NO.	DESCRIPTION
1	B-0107-J	1.07 GPM Flow Spray Valve
2	010476-45	#27 Washer
3	000907-45	Spray Valve Hold Down Ring
4	002987-40	Grip Handle
5	001014-45	Washer, Hose Barrel
6	B-0044-H2A	44" Flexible Stainless Steel Hose, Less Handle
7	000888-45	EasyInstall Overhead Spring
8	000821-40	Spring Body
9	B-TEE-RGD	Rigid Tee w/ Plug
10	B-0109-01	6" Wall Bracket
11	004R	Finger Hook
12	145X	3/8" NPT x 12" Riser
13	062X	12" Swing Nozzle
14	B-0155-CR-LN	EasyInstall Add-On Faucet, Cerama Cartridge & Lever Handle- Less Nozzle
15	B-0970-FE	3/8" NPT Vacuum Breaker
16	B-0970-FEZ	EasyInstall 3/8" NPT Vacuum Breaker
17	EZ-K	EasyInstall Kit: Nut, Bushing, O-ring & Lock Washer
18	014200-45	Star Washer, Anti-Rotation
19	018506-19NS	Blue Button Index, Press-in
20	000925-45	Lab Handle Screw
21	001638-45NS	Lever Handle (New Style)
22	012395-25NS	Quarter-Turn Cerama Cartridge w/ Check Valve, LTC
23	00AA	1/2" NPT Female Eccentric Flange
24	001019-45	Coupling Nut Washer
25	012447-25NS	Quarter-Turn Cerama Cartridge w/ Check Valve, Handle, Blue Index & Screw, LTC
26	012446-25NS	Quarter-Turn Cerama Cartridge w/ Check Valve, Handle, Red Index & Screw, RTC
27	012394-25NS	Quarter-Turn Cerama Cartridge w/ Check Valve, RTC
28	001193-19NS	Red Button Index, Press-in
29	001065-45	O-Ring
30	B-PT	Full Flow Stream Regulator, 55/64-27

Product Specifications:

Pre-Rinse Unit: EasyInstall 8" Wall Mount Mixing Faucet, Quarter-Turn Cerama Cartridges w/ Check Valves, EasyInstall Vacuum Breaker, Lever Handles, Add-On Faucet, 12" Swing Nozzle, 44" Flexible Stainless Steel Hose, 1.07 GPM Spray Valve, 6" Wall Bracket, Rigid Tee & 1/2" NPT Female Inlets

Product Compliance:

ASME A112.18.1 / CSA B125.1
NSF 61 - Section 9
NSF 372 (Low Lead Content)
2019 DOE PRSV - Class II
CSA B64.8 (VB)

Drawn:	Checked:	Approved:	Date:	Scale:	Sheet:
CAB	JRM	JHB	07/03/24	NTS	2 of 2