T&S BRASS AND BRONZE WORKS, INC.

2 Saddleback Cove / P.O. Box 1088
Travelers Rest, SC 29690

Travelers Rest, SC: 800-476-4103 • Simi Valley, CA: 800-423-0150 • Fax: 864-834-3518 • www.tsbrass.com

Model No.
B-0133-CR-B08CX

Item No.

This Space for Architect/Engineer Approval

Job Name_____Date_____

Model Specified_____ Quantity_____

Customer/Wholesaler_____

Contractor_____

Architect/Engineer_____

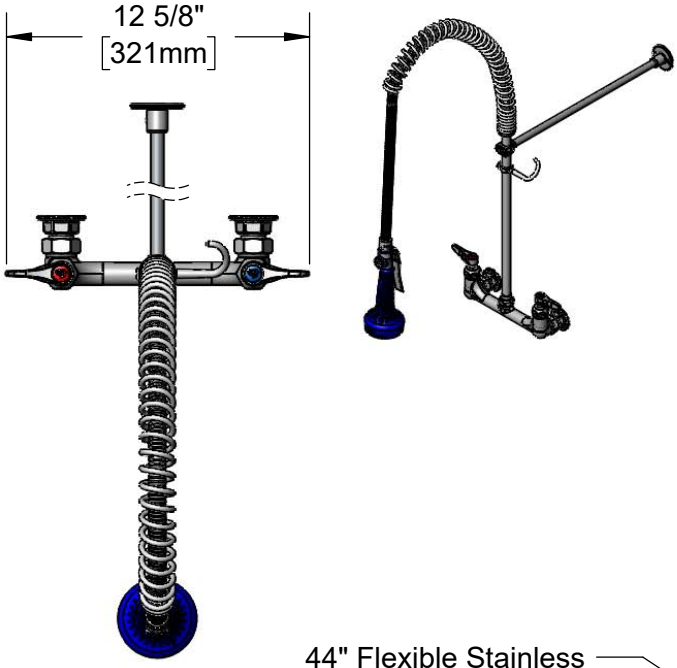

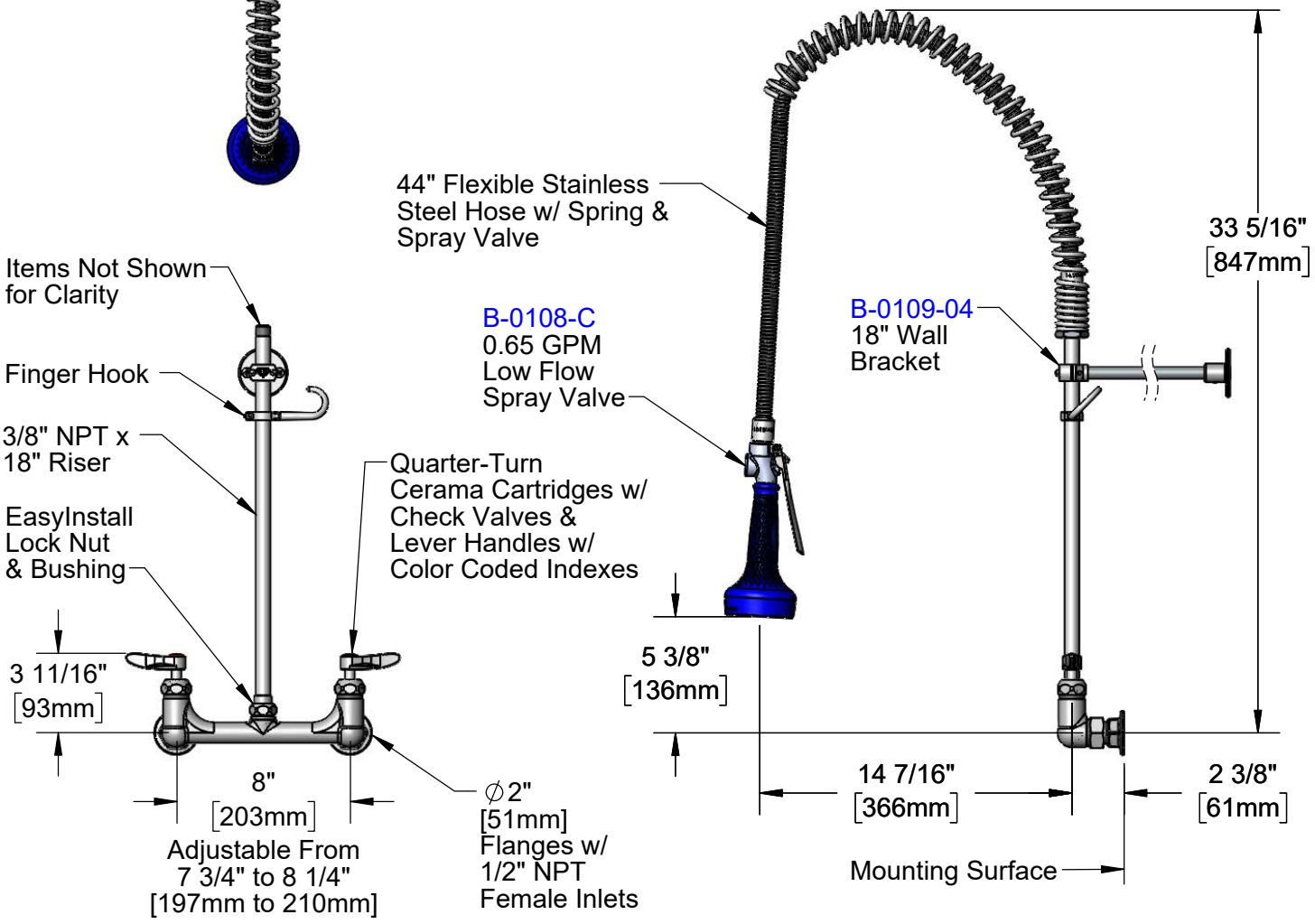

Product Specifications:

Pre-Rinse Unit: EasyInstall 8" Wall Mount Mixing Faucet, Quarter-Turn Cerama Cartridges w/ Check Valves, Lever Handles, 44" Flexible Stainless Steel Hose, 0.65 GPM Low Flow Spray Valve, 18" Wall Bracket & 1/2" NPT Female Inlets

Product Compliance:

ASME A112.18.1 / CSA B125.1
NSF 61 - Section 9
NSF 372 (Low Lead Content)
2019 DOE PRSV - Class I

Drawn:	Checked:	Approved:	Date:	Scale:	Sheet:
AMG	JRM	JHB	08/15/19	1:8	1 of 2

T&S BRASS AND BRONZE WORKS, INC.

2 Saddleback Cove / P.O. Box 1088
Travelers Rest, SC 29690

Travelers Rest, SC: 800-476-4103 • Simi Valley, CA: 800-423-0150 • Fax: 864-834-3518 • www.tsbrass.com

Model No.
B-0133-CR-B08CX

Item No.

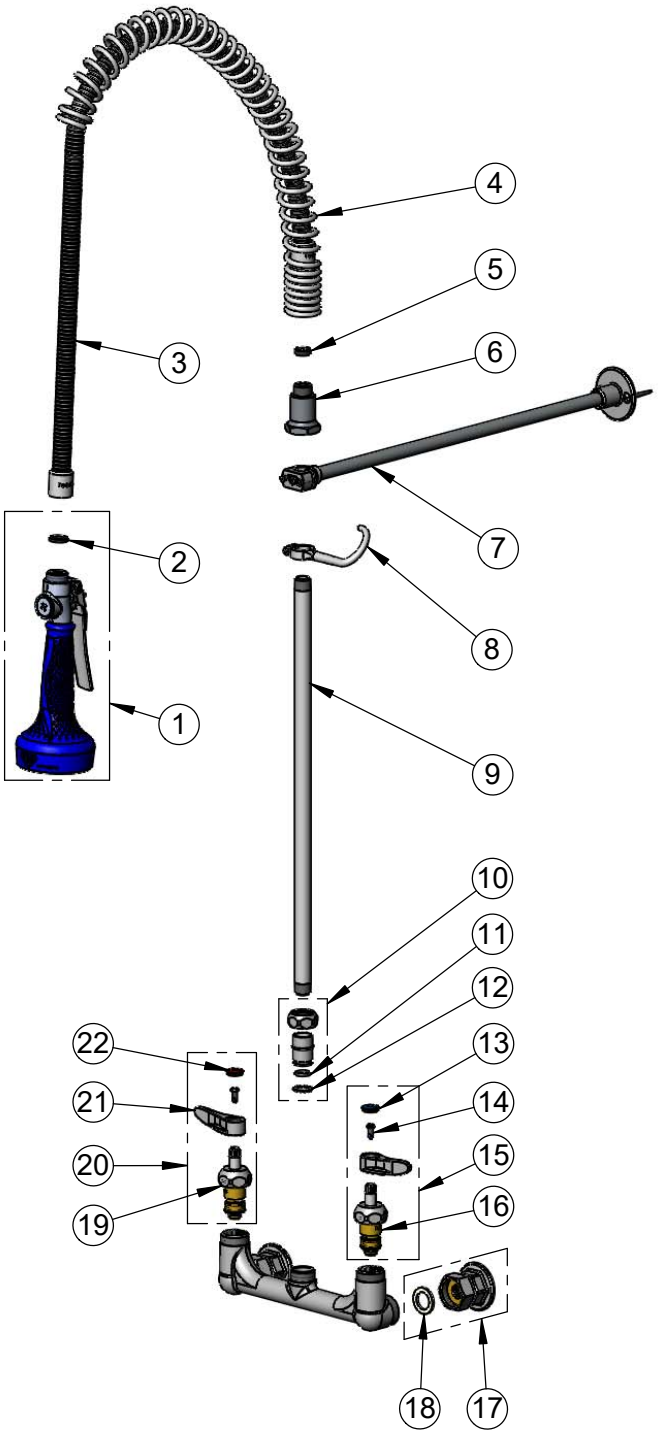

ITEM NO.	SALES NO.	DESCRIPTION
1	B-0108-C	0.65 GPM Low Flow Spray Valve w/ Ergo-Grip
2	001014-45	Washer, B-0100 Hose Barrel
3	B-0044-H2A	44" Flexible Stainless Steel Hose, Less Handle
4	000888-45	EasyInstall Overhead Spring
5	010476-45	#27 Washer
6	000821-40	Spring Body
7	B-0109-04	18" Wall Bracket
8	004R	Finger Hook
9	000369-40	3/8" NPT x 18" Riser
10	EZ-K	EasyInstall Kit
11	001065-45	O-Ring
12	014200-45	Star Washer, Anti-Rotation
13	018506-19NS	Blue Button Index, Press-in
14	000925-45	Lab Handle Screw
15	012447-25NS	Quarter-Turn Cerama Cartridge w/ Check Valve, Handle, Blue Index & Screw, LTC
16	012395-25NS	Quarter-Turn Cerama Cartridge w/ Check Valve, LTC
17	00AA	1/2" NPT Female Eccentric Flange
18	001019-45	Coupling Nut Washer
19	012394-25NS	Quarter-Turn Cerama Cartridge w/ Check Valve, RTC
20	012446-25NS	Quarter-Turn Cerama Cartridge w/ Check Valve, Handle, Red Index & Screw, RTC
21	001638-45NS	Lever Handle (New Style)
22	001193-19NS	Red Button Index, Press-in

Product Specifications:

Pre-Rinse Unit: EasyInstall 8" Wall Mount Mixing Faucet, Quarter-Turn Cerama Cartridges w/ Check Valves, Lever Handles, 44" Flexible Stainless Steel Hose, 0.65 GPM Low Flow Spray Valve, 18" Wall Bracket & 1/2" NPT Female Inlets

Product Compliance:

ASME A112.18.1 / CSA B125.1
NSF 61 - Section 9
NSF 372 (Low Lead Content)
2019 DOE PRSV - Class I

Drawn:	Checked:	Approved:	Date:	Scale:	Sheet:
AMG	JRM	JHB	08/15/19	NTS	2 of 2