T&S BRASS AND BRONZE WORKS, INC.

2 Saddleback Cove / P.O. Box 1088
Travelers Rest, SC 29690

Travelers Rest, SC: 800-476-4103 • Simi Valley, CA: 800-423-0150 • Fax: 864-834-3518 • www.tsbrass.com

Model No.
B-0133-18-CRBEK

Item No.

This Space for Architect/Engineer Approval

Job Name_____Date_____

Model Specified_____ Quantity_____

Customer/Wholesaler_____

Contractor_____

Architect/Engineer_____

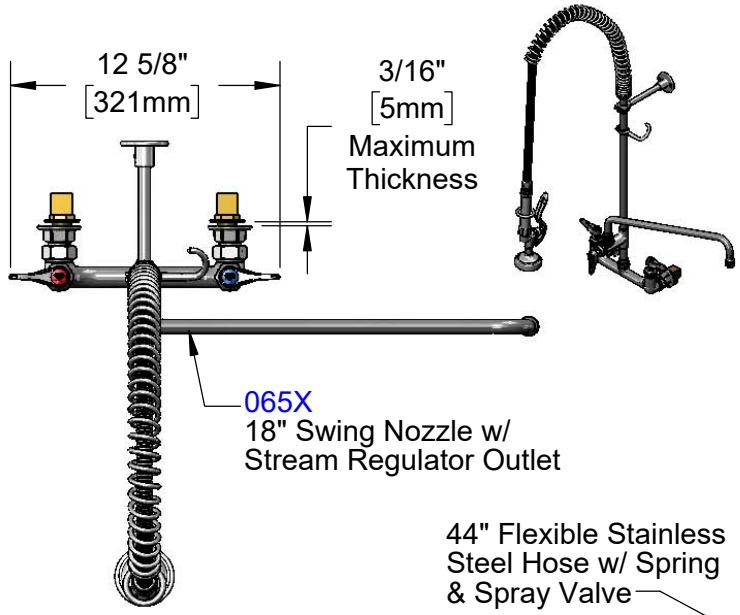

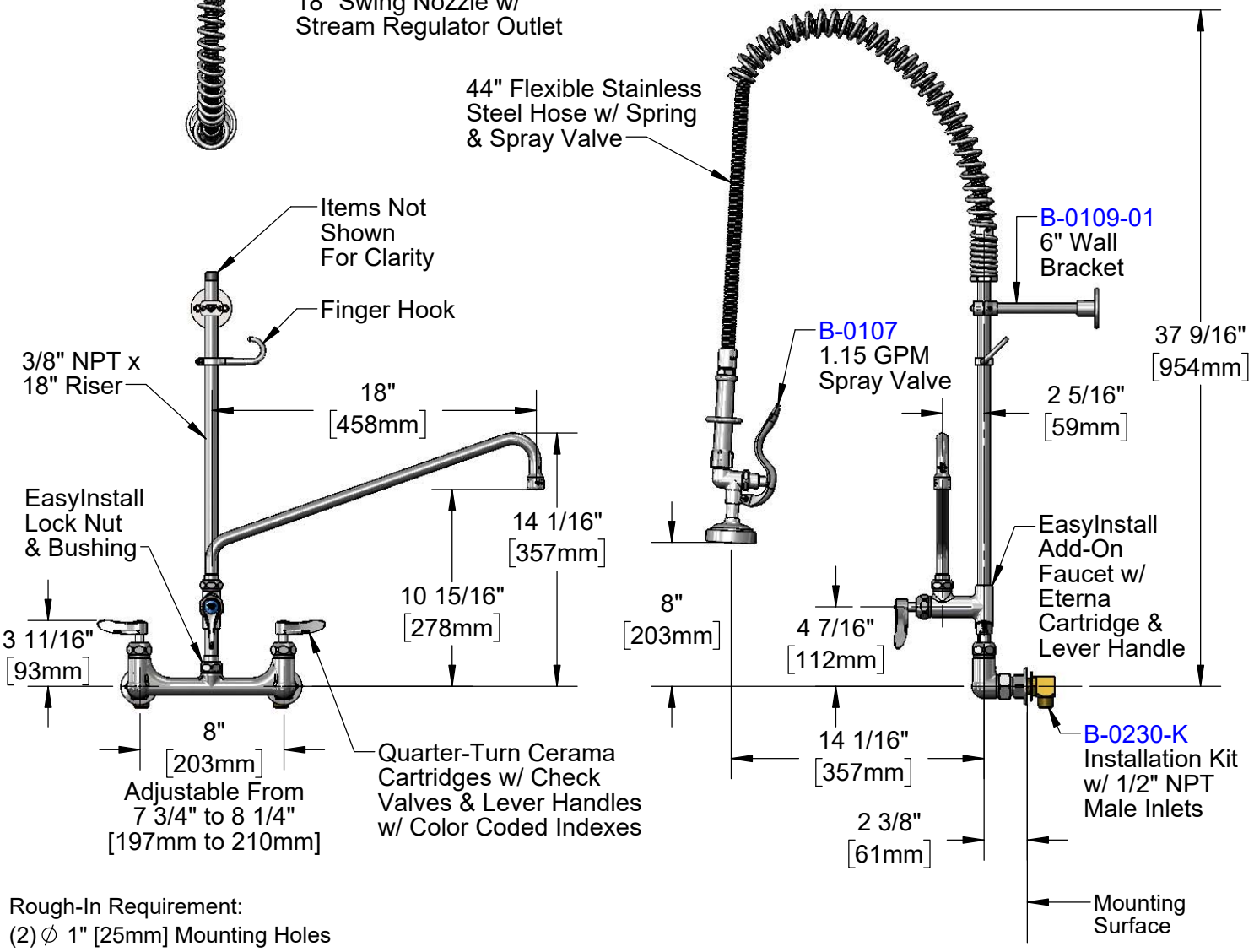

Rough-In Requirement:
(2) ∅ 1" [25mm] Mounting Holes

Product Specifications:

Pre-Rinse Unit: EasyInstall 8" Wall Mount Mixing Faucet, Quarter-Turn Cerama Cartridge w/ Check Valves, Lever Handles, Add-On Faucet w/ 18" Swing Nozzle, 44" Flexible Stainless Steel Hose, 1.15 GPM Spray Valve, 6" Wall Bracket & Installation Kit w/ 1/2" NPT Male Inlets

Product Compliance:

ASME A112.18.1 / CSA B125.1
NSF 61 - Section 9
NSF 372 (Low Lead Content)
2019 DOE PRSV - Class II

Drawn: AMG	Checked: JRM	Approved: JHB	Date: 10/15/18	Scale: 1:9	Sheet: 1 of 2

T&S BRASS AND BRONZE WORKS, INC.

2 Saddleback Cove / P.O. Box 1088
Travelers Rest, SC 29690

Travelers Rest, SC: 800-476-4103 • Simi Valley, CA: 800-423-0150 • Fax: 864-834-3518 • www.tsbrass.com

Model No.
B-0133-18-CRBEK

Item No.

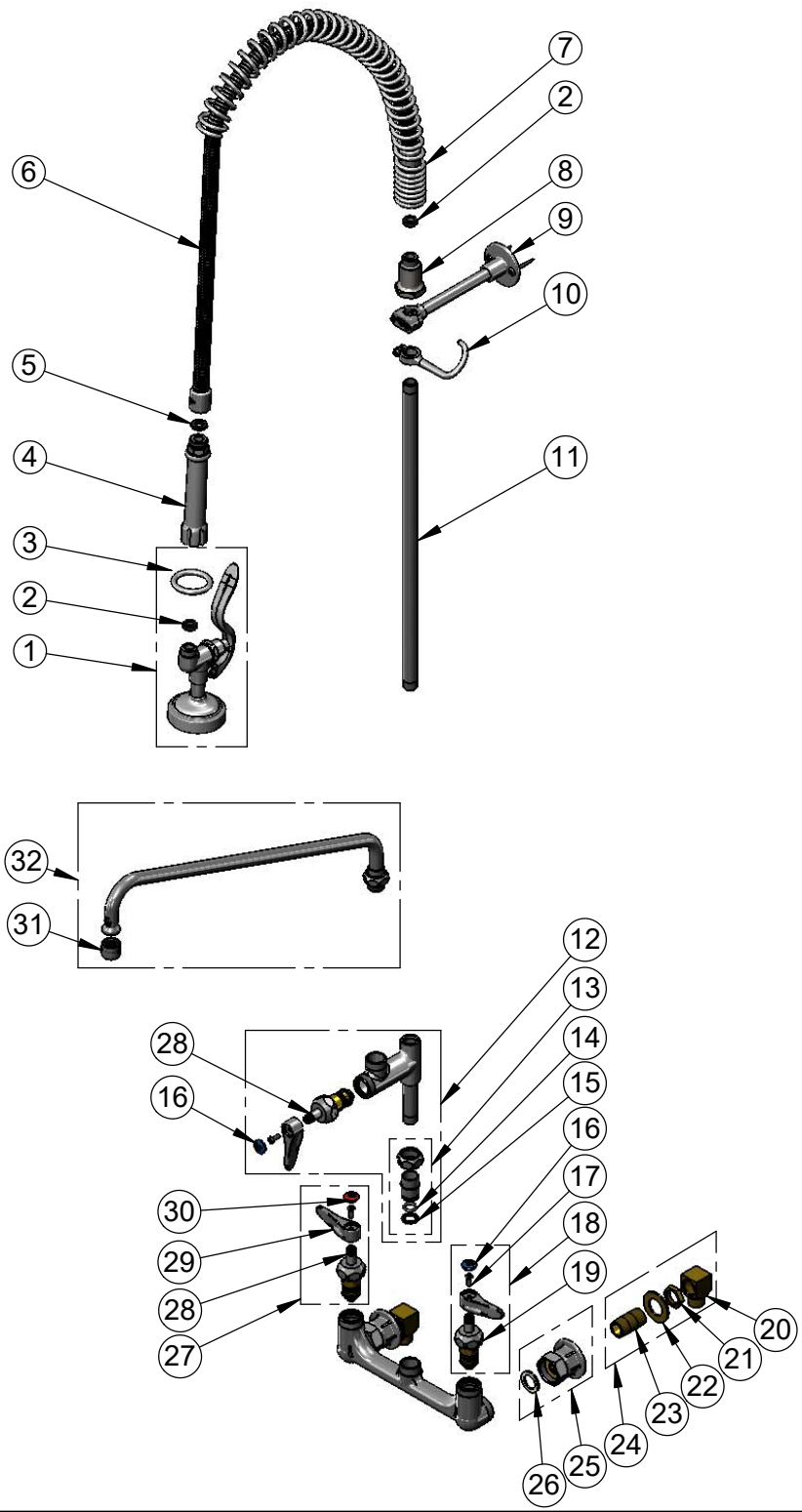

ITEM NO.	SALES NO.	DESCRIPTION
1	B-0107	1.15 GPM Spray Valve
2	010476-45	#27 Washer
3	000907-45	Spray Valve Hold Down Ring
4	002987-40	Grip Handle
5	001014-45	Washer, B-0100 Hose Barrel
6	B-0044-H2A	44" Flexible Stainless Steel Hose, Less Handle
7	000888-45	EasyInstall Overhead Spring
8	000821-40	Spring Body
9	B-0109-01	6" Wall Bracket
10	004R	Finger Hook
11	000369-40	3/8" NPT x 18" Riser
12	B-0155-CR-LN	Add-On Faucet w/ Cerama Cartridge & Lever Handle
13	EZ-K	EasyInstall Kit: Nut, Bushing, O-Ring & Lock Washer
14	001065-45	O-Ring
15	014200-45	Star Washer, Anti-Rotation
16	018506-19NS	Blue Button Index, Press-in
17	000925-45	Lab Handle Screw
18	012447-25NS	Quarter-Turn Cerama Cartridge, LTC w/ Check Valve, Handle, Index & Screw
19	012395-25NS	Quarter-Turn Cerama Cartridge, LTC w/ Check Valve
20	B-1100-K	1/2" NPT Male Inlet Elbow
21	002954-45	Shank Lock Nut
22	000999-45	Brass Lock Washer
23	013357-20	1/2" NPT x 1-5/8" Lg. Close Nipple
24	B-0230-K	Short Elbow Installation Kit
25	00AA	1/2" NPT Female Eccentric Flange
26	001019-45	Coupling Nut Washer
27	012446-25NS	Quarter-Turn Cerama Cartridge, RTC w/ Check Valve, Handle, Index & Screw
28	012394-25NS	Quarter-Turn Cerama Cartridge, RTC w/ Check Valve
29	001638-45NS	Lever Handle (New Style)
30	001193-19NS	Red Button Index, Press-in
31	B-PT	Full Flow Stream Regulator, 55/64-27
32	065X	18" Swing Nozzle w/ Stream Regulator Outlet

Product Specifications:

Pre-Rinse Unit: EasyInstall 8" Wall Mount Mixing Faucet, Quarter-Turn Cerama Cartridge w/ Check Valves, Lever Handles, Add-On Faucet w/ 18" Swing Nozzle, 44" Flexible Stainless Steel Hose, 1.15 GPM Spray Valve, 6" Wall Bracket & Installation Kit w/ 1/2" NPT Male Inlets

Product Compliance:

ASME A112.18.1 / CSA B125.1
NSF 61 - Section 9
NSF 372 (Low Lead Content)
2019 DOE PRSV - Class II

Drawn:	Checked:	Approved:	Date:	Scale:	Sheet:
AMG	JRM	JHB	10/15/18	NTS	2 of 2