T&S BRASS AND BRONZE WORKS, INC.

2 Saddleback Cove / P.O. Box 1088
Travelers Rest, SC 29690

Travelers Rest, SC: 800-476-4103 ÅSimi Valley, CA: 800-423-0150 ÅFax: 864-834-3518 Åwww.tsbrass.com

Model No.

017888-45

Item No.

This Space for Architect/Engineer Approval

Job Name_____Date_____

Model Specified_____ Quantity_____

Customer/Wholesaler_____

Contractor_____

Architect/Engineer_____

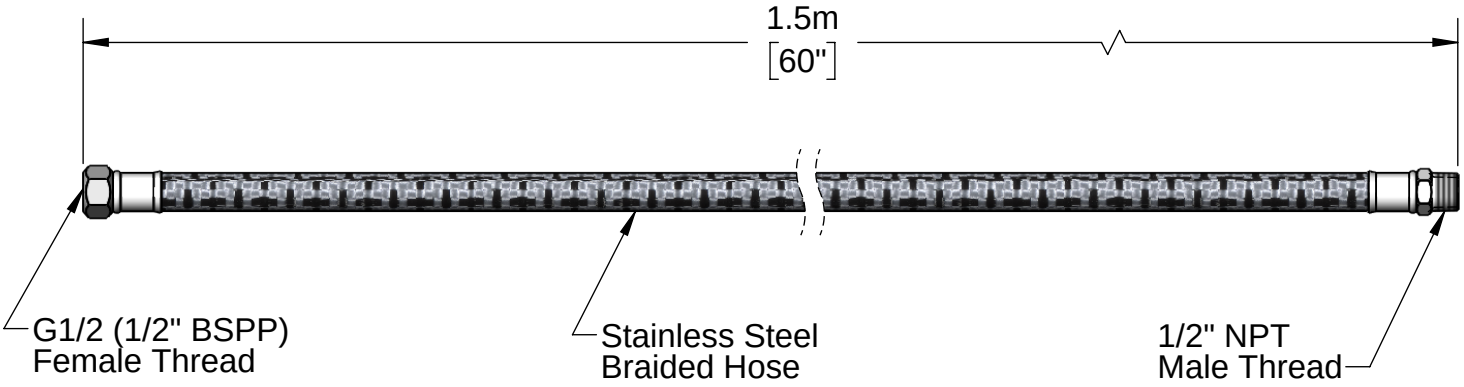

Product Specifications:

ESA Hose Reel 1.5m Stainless Steel Braided Connector Hose,
1/2" NPT Male & G1/2 (1/2" BSPP) Female Fittings

Product Compliance:

Drawn: JRM	Checked: JMD	Approved: JHB	Date: 10/18/22	Scale: 1:4	Sheet: 1 of 1