T&S BRASS AND BRONZE WORKS, INC.

2 Saddleback Cove / P.O. Box 1088
Travelers Rest, SC 29690

Travelers Rest, SC: 800-476-4103 • Simi Valley, CA: 800-423-0150 • Fax: 864-834-3518 • www.tsbrass.com

Model No.
000387-40

Item No.

This Space for Architect/Engineer Approval

Job Name_____Date_____

Model Specified_____ Quantity_____

Customer/Wholesaler_____

Contractor_____

Architect/Engineer_____

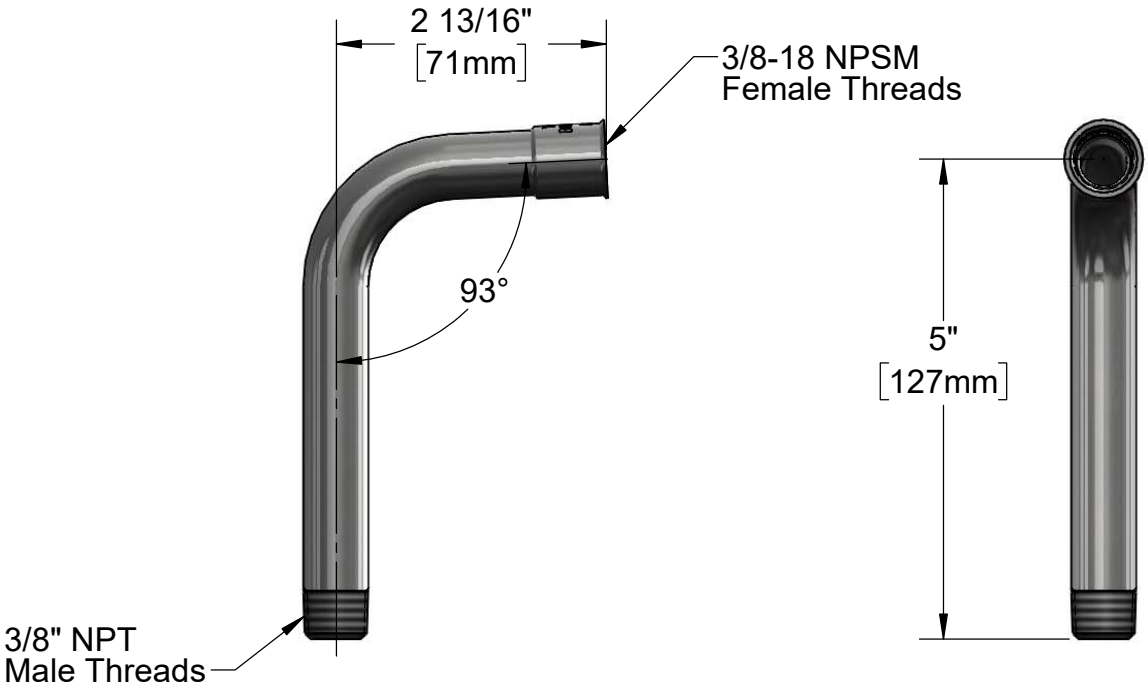

Product Specifications:
Nozzle

Product Compliance:
NSF 61 - Section 9
NSF 372 (Low Lead Content)

Drawn: AMG	Checked:	Approved:	Date:	Scale: 1:2	Sheet: 1 of 1