STOELTING®
A VOLLRATH® COMPANY

Model S100 / S400 / S500
OPERATORS MANUAL

Manual No. 513560

This manual provides basic information about the machine. Instructions and suggestions are given covering its operation and care.

The illustrations and specifications are not binding in detail. We reserve the right to make changes to the machine without notice, and without incurring any obligation to modify or provide new parts for machines built prior to date of change.

DO NOT ATTEMPT to operate the machine until instructions and safety precautions in this manual are read completely and are thoroughly understood. If problems develop or questions arise in connection with installation, operation, or servicing of the machine, contact Stoelting.

STOELTING®
A VOLLRATH® COMPANY

stoeltingfoodservice.com

Stoelting Foodservice Equipment
502 Highway 67
Kiel, WI 53042-1600
U.S.A.

Main Tel: 800.558.5807
Fax: 920.894.7029

Customer Service: 888.429.5920
Fax: 800.545.0662
Email: foodservice@stoelting.com

© 2014 PW Stoelting, LLC

A Few Words About Safety

Safety Information

Read and understand the entire manual before operating or maintaining Stoelting equipment.

This manual provides the operator with information for the safe operation and maintenance of Stoelting equipment. As with any machine, there are hazards associated with their operation. For this reason safety is emphasized throughout the manual. To highlight specific safety information, the following safety definitions are provided to assist the reader.

The purpose of safety symbols is to attract your attention to possible dangers. The safety symbols, and their explanations, deserve your careful attention and understanding. The safety warnings do not by themselves eliminate any danger. The instructions or warnings they give are not substitutes for proper accident prevention measures.

If you need to replace a part, use genuine Stoelting parts with the correct part number or an equivalent part. We strongly recommend that you do not use replacement parts of inferior quality.

Safety Alert Symbol:

This symbol Indicates danger, warning or caution. Attention is required in order to avoid serious personal injury. The message that follows the symbol contains important information about safety.

Signal Word:

Signal words are distinctive words used throughout this manual that alert the reader to the existence and relative degree of a hazard.

WARNING

The signal word “WARNING” indicates a potentially hazardous situation, which, if not avoided, may result in death or serious injury and equipment/property damage.

CAUTION

The signal word “CAUTION” indicates a potentially hazardous situation, which, if not avoided, may result in minor or moderate injury and equipment/property damage.

CAUTION

The signal word “CAUTION” not preceded by the safety alert symbol indicates a potentially hazardous situation, which, if not avoided, may result in equipment/property damage.

NOTE (or NOTICE)

The signal word “NOTICE” indicates information or procedures that relate directly or indirectly to the safety of personnel or equipment/property.

TABLE OF CONTENTS

TABLE OF CONTENTS **2**

SECTION 1 - INTRODUCTION **4**

1.1 Description 4
1.2 Specifications 4

SECTION 2 - SHIPMENT **5**

2.1 Shipment and Transit 5
2.2 Installation 5

SECTION 3 - OPERATION INSTRUCTIONS **6**

3.1 Operator's Safety Precautions 6
3.2 Lil' Shaver and Blender Controls 6
3.3 Cleaning and Sanitizing 7

SECTION 4 - ADJUSTMENTS **8**

4.1 Dispense Rate 8
4.2 Shaver Motor Reset 8

SECTION 5 - ELECTRICAL **9**

SECTION 6 - MECHANICAL **12**

SECTION 7 - TROUBLESHOOTING **16**

SECTION 8 - DRAWINGS AND WIRING DIAGRAMS **18**

ILLUSTRATIONS

Fig.1 - Drain Hose Connection 5

Fig.2 - Operation Safety 6

Fig.3 - Operation Control 6

Fig.4 - Adjusting Screw & Overload 8

Fig.5 - Electrical Access 9

Fig.6 - Switch Removal 9

Fig.7 - Time Delay Relay 10

Fig.8 - Drink Selector Switch 10

Fig.9 - Potentiometer 10

Fig.10 - Safety Switch 11

Fig.11 - Contactors 11

Fig.12 - Time Delay Relay 11

Fig.13 - Shaver Blade Replacement 12

Fig.14 - Shaver Blade 12

Fig.15 - Blender Motor 13

Fig.16 - Shaver Drive Motor 14

Fig.17- Drive Bearings Assembly 14

SECTION 1
INTRODUCTION

1.1 DESCRIPTION

The LIL' SHAVER® is a heavy-duty ice shaver and frozen drink blending machine. This machine can be used to make perfect frozen cocktails, fruit juices, slush drinks, frozen coffee drinks, non-alcoholic drinks and more. The instructions in this manual should be followed closely for trouble-free operation.

1.2 SPECIFICATIONS

SPECIFICATIONS				
	S100	**S400**	**S500**	**S505/S510**
DIMENSIONS **Width** **Depth** **Height**	11.3" (28.6 cm) 26" (66 cm) 26" (66 cm)	11.3" (28.6 cm) 21" (50.3 cm) 26" (66 cm)	11.3" (28.6 cm) 21" (50.3 cm) 26" (66 cm)	11.3" (28.6 cm) 21" (50.3 cm) 26" (66 cm) (S510 Height 31.5" -80cm)
WEIGHT	71 lbs. (32 kg)	71 lbs. (32 kg)	71 lbs. (32 kg)	71 lbs. (32 kg)
ELECTRICAL	1 Phase, 115 volts, 60 hz. 15 Amp cord connected; 12 running amps	1 Phase, 115 volts, 60 hz. 15 Amp cord connected; 12 running amps	1 Phase, 115 volts, 60 hz. 15 Amp cord connected; 12 running amps	1 Phase, 115 volts, 60 hz. 15 Amp cord connected; 12 running amps
SHAVER MOTOR	.25 Hp, capacitor start	.25 Hp, capacitor start	.25 Hp, capacitor start	.25 Hp, capacitor start
BLENDER MOTOR	.43 Hp, 2 speed (18000 & 14000 RPM)	.43 Hp, 2 speed (18000 & 14000 RPM)	.43 Hp, 2 speed (18000 & 14000 RPM)	.43 Hp, 2 speed (18000 & 14000 RPM)
HOPPER CAPACITY	Approx. 5 gallons cubed ice (23 lbs. 10 kg) = approx. (100) 12 oz. drinks	Approx. 5 gallons cubed ice (23 lbs. 10 kg) = approx. (100) 12 oz. drinks	Approx. 5 gallons cubed ice (23 lbs. 10 kg) = approx. (100) 12 oz. drinks	Approx. 5 gallons cubed ice (23 lbs. 10 kg) = approx. (100) 12 oz. drinks (S510 approx. 10 gal.)
BLENDER CAPACITY	64 oz., 1/2 gal. (2 liter)	64 oz., 1/2 gal. (2 liter)	64 oz., 1/2 gal. (2 liter)	64 oz., 1/2 gal. (2 liter)
SHAVE TIME (mid range)	1 Drink - 5.7 sec. 2 Drink - 9.1 sec. 3 Drink - 13.0 sec.	1 Drink - 5.7 sec. 2 Drink - 9.1 sec. 3 Drink - 13.0 sec.	1 Drink - 5.7 sec. 2 Drink - 9.1 sec. 3 Drink - 13.0 sec.	1 Drink - 8 sec. 2 Drink - 11 sec. 3 Drink - 14 sec.
BLENDER RUN TIME * (mid range)			1 Drink - 5.6 sec. * 2 Drink - 9.0 sec. 3 Drink - 13.1 sec.	1 Drink - 10 sec. * 2 Drink - 15 sec. 3 Drink - 20 sec.

U/L approved

* Not all models

SECTION 2
SHIPMENT

2.1 SHIPMENT AND TRANSIT

The LIL' SHAVER® has been completely assembled, operated and inspected at the factory. Upon arrival at the final destination, the ice shaver must be checked for any damage that may have occurred during transit. THE CARRIER IS RESPONSIBLE FOR ALL DAMAGE IN TRANSIT,WHETHER VISIBLE OR CONCEALED. Do not pay the freight bill until you have checked the equipment. Have the carrier note any visible damage on freight bill. If concealed damage and/or shortages are found later, advise the carrier inspector within ten days and request inspection. You must make claim for damages and/or shortages in shipment with the carrier. **STOELTING, INC., CANNOT MAKE ANY CLAIMS AGAINST THE CARRIER.**

2.2 INSTALLATION

A. Unbox the Lil' Shaver

B. Place on a level, solid surface.

C. Adjust the rubber feet until the shaver is level and resting solidly on all four feet. (Feet can be placed in alternate locations to match various counter depths).

D. Connect the separate drain hose to the drain, and direct the hose to a sink, floor drain or container. Liquid must not cover the hose end or the unit will not drain properly. (Figure 1)

E. Plug the 115 volt 15 amp cord plug into a dedicated circuit. We do *not* recommend using an extension cord, but if it is necessary to use one, it must be a number 12 gauge or heavier wire with a ground.

WARNING

DO NOT USE A GROUNDED ADAPTER PLUG OR ALTER THE ELECTRICAL CORD IN ANY WAY. FAILURE TO HEED THE WARNING COULD CAUSE DAMAGE TO THE MACHINE OR PERSONAL INJURY.

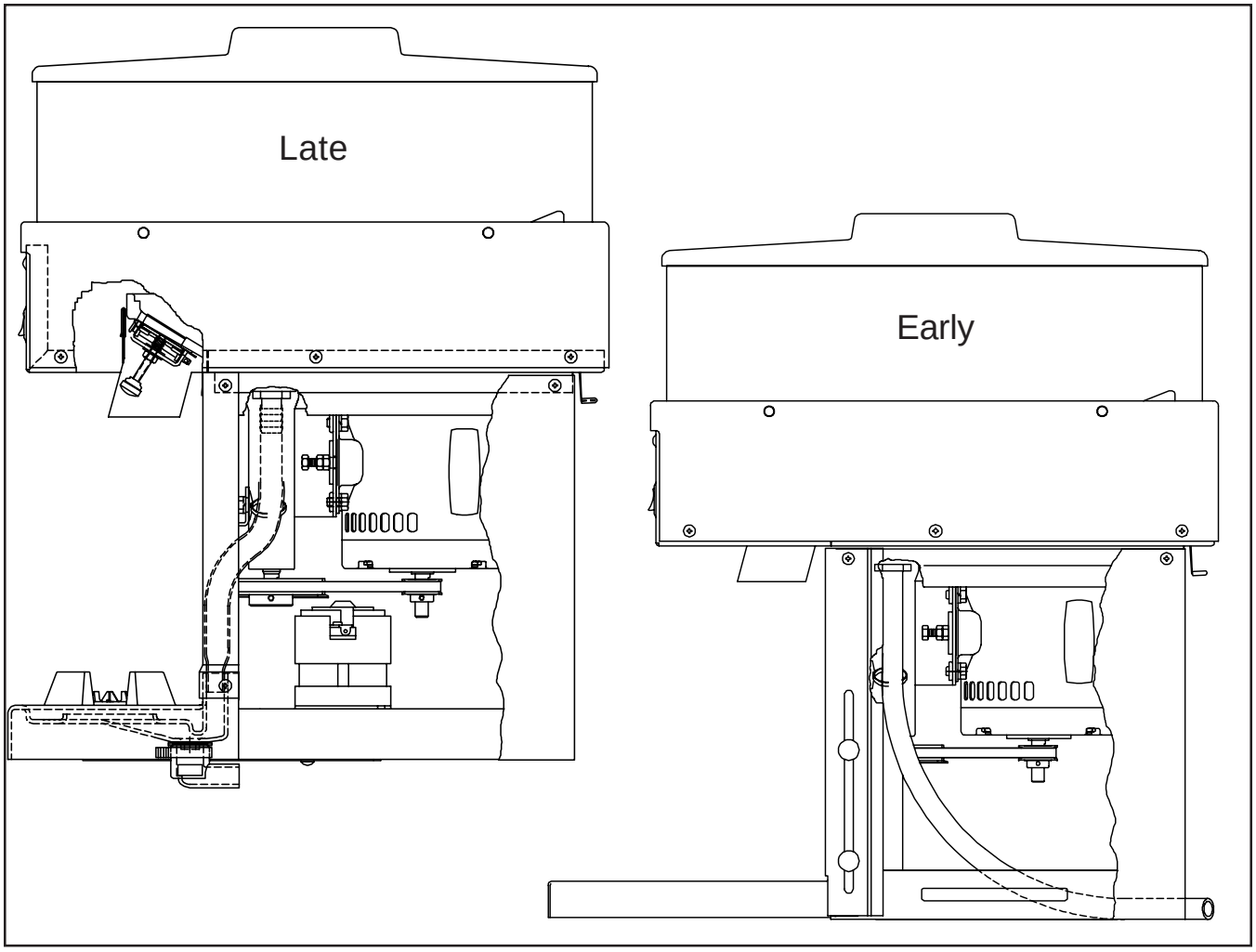

Figure 1
Drain Hose Connection
S500 Shown

SECTION 3
OPERATOR INSTRUCTIONS

3.1 OPERATORS SAFTEY PRECAUTIONS

Safe operation is no accident; observe these rules:

A. Know the equipment. Read and understand the operating instructions.

B. Notice all warning labels on the equipment.

C. Wear proper clothing. Avoid loose-fitting garments, and remove watches, rings or jewelry which could cause a serious accident.

D. Maintain a clean work area. Avoid accidents by clean ing up the area and keeping it clean.

E. Stay alert at all times. Know which switch, push button or control you are about to use, and what effect it is going to have.

F. Disconnect electrical cord for maintenance. Never attempt to repair or perform maintenance on the unit until the main electrical power has been disconnected.

G. Do not operate under unsafe operating conditions. Never operate the machine if unusual or excessive vibration occurs.

H. Do not operate the unit without the hopper cover and hopper in place and intact. (Figure 2)

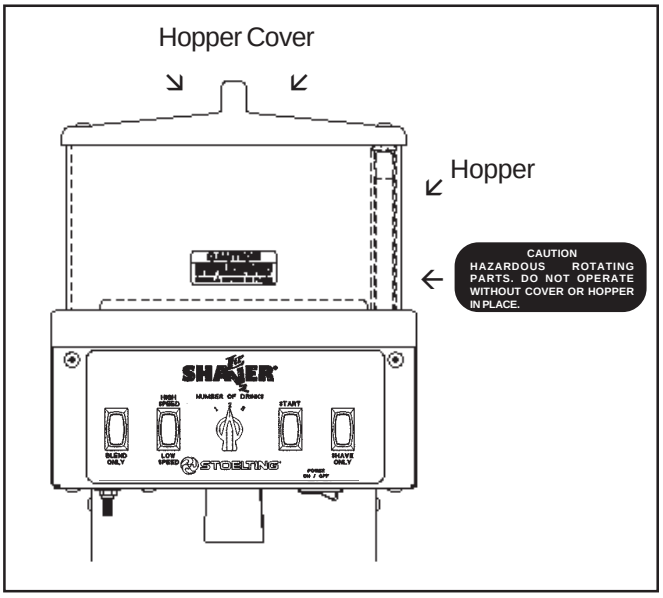

Figure 2
Operation Safety
S100/S500 Shown

3.2 LIL' SHAVER AND BLENDER CONTROLS

Before operating it is required the operator know the function of each operation control. Refer to Figure 3 for location of the operating controls on the machine.

A. The POWER ON/OFF switch. When the POWER ON/OFF switch is placed in the OFF position, the machine will not run. When the switch is placed in the ON position the shaver and blender can be operated by activating the appropriate switch.

B. Blend Time Adjuster. To increase blend time (fine ice) turn adjuster clockwise. To decrease blend time turn adjuster counter-clockwise.

NOTE

Use a small screwdriver to adjust.

C. Blend Start Switch. When activated, the start switch will blend the drink for the pre-set time.

NOTE

Blender will not start until 2.2 seconds after the shave switch has been activated. (Models 505/510)

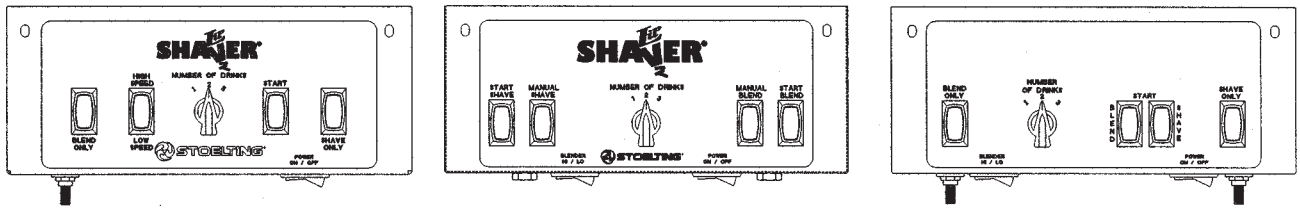

S100/S500 **S505/S510** **S502+**

Figure 3
Operation Controls

D. BLEND ONLY Switch when activated, the blender drive will run until the switch is released.

E. HIGH SPEED/LOW SPEED Switch (models S100/S500 only). When in the LOW SPEED position, the blender drive operates at the lower speed when the BLEND ONLY switch is activated. When in the HIGH SPEED position, the blender drive will operate at the higher speed when the BLEND ONLY switch is activated.

F. NUMBER OF DRINKS ROTARY Switch (models S100/S500 series only).The NUMBER OF DRINKS switch operates a timer. When the desired number of drinks has been selected and the START switch activated, the machine will shave enough ice for that number of drinks, then stop.

G. SHAVE TIME ADJUSTER to increase shave time (more ice) turn adjuster clockwise. To decrease shave time turn adjuster counter-clockwise.

NOTE

USE A SMALL SCREWDRIVER TO ADJUST.

H. Shave START Switch (models S100/S500 series only). When activated, the START switch will shave ice for the number of drinks selected, then stop.

I. SHAVE ONLY Switch. When the SHAVE ONLY switch is activated, the machine will shave ice as long as the switch is depressed. When released, it will stop.

3.3 Cleaning and Sanitizing

It is important to keep your LIL' SHAVER® clean and sanitary. To properly clean and sanitize, follow the instructions below.

A. Remove ice from hopper by pressing the SHAVE ONLY switch and dispensing into a container.

WARNING

USE CAUTION WHEN ACCESSING THE ICE SHAVING AREA. THE ICE SHAVING BLADE IS EXTREMELY SHARP. CONTACT WITH THIS BLADE COULD CAUSE INJURY.

B. Spray ice hopper and shaving area with an approved cleaner/sanitizer.

C. Wash hopper cover in warm soapy water, rinse, then sanitize and let dry.

CAUTION

DO NOT PUT ANY PARTS THROUGH THE DISHWASHER. THESE PARTS ARE NOT DISHWASHER SAFE AND DAMAGE WILL OCCUR.

D. Disassemble blender following the steps outlined below.

1. Remove cover center knob (if used) by turning counter-clockwise.

2. Remove blade assembly from bowl by turning counter-clockwise viewed from driven end.

WARNING

NEVER GRASP THE BLADE ASSEMBLY BY THE CUTTING BLADES. THE BLADES ARE EXTREMELY SHARP AND COULD CAUSE INJURY IF HANDLED IN A CARELESS MANNER.

3. Remove rubber gasket.

4. Clean all parts in warm soapy water, rinse, then sanitize and let air dry.

5. Assemble all parts in reverse order.

SECTION 4
ADJUSTMENTS

4.1 Dispense Rate

The rate of ice shaving can be adjusted by raising or lowering the shaving blade. The adjusting screw is accessed from just behind the POWER ON/OFF switch. Counter clockwise rotation of the adjusting knob gives a faster dispense rate (more ice shaved in the same time.) Make small (1/8 turn) changes in the adjusting screw until the desired rate is achieved. (Figure 4)

4.2 Shaver Motor Reset

The machine's shaver motor is equipped with an overload devise to protect the motor and shaver. Manually reset this protector by pulling the reset lever down. (Figure 4)

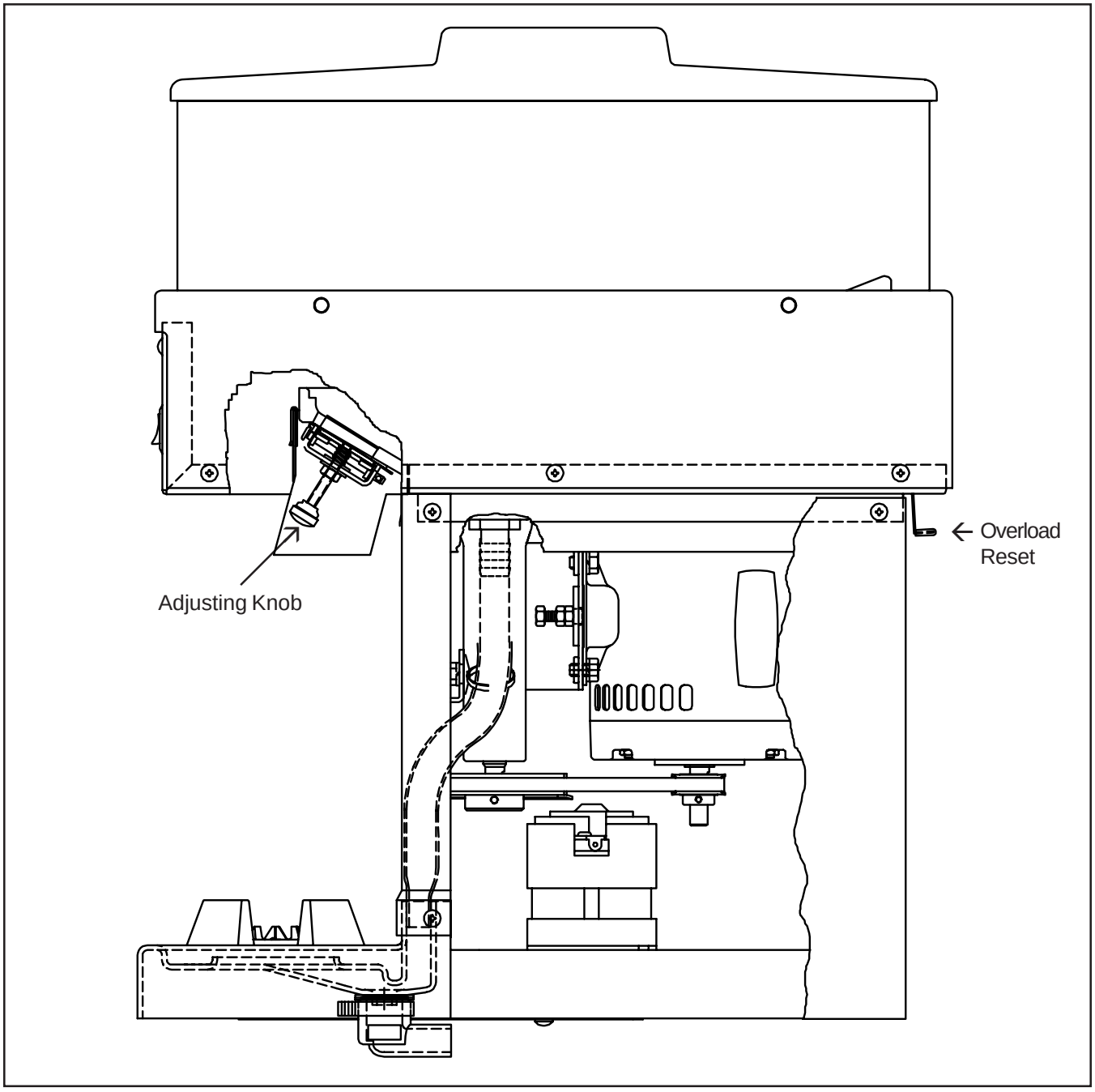

Figure 4
Adjusting Screw and Overload
S500 Shown

SECTION 5
ELECTRICAL

The control circuit consists of a combination of switches, potentiometers, and time delay relays. The electrical controls along with an adjustable ice shaving blade allow the operator to not only adjust the amount of ice shaved but also the ice shaving size.

To gain access to the electrical controls perform the following procedures:

WARNING
DISCONNECT SHAVER FROM THE SOURCE OF ELECTRICAL SUPPLY BEFORE SERVICING.

1. To access the front electrical box remove the six retaining screws, then pull down and out.

If additional room is desired to service the front electrical box or if access to the contactors is required perform the following procedures:

1. Remove the hopper cover. Figure 5.
2. Remove the four hand screws and lift the hopper up and off.
3. Remove the seven screws holding the ice inlet chute, then lift straight up.
4. To provide access to the contactors remove the two hex head nuts holding the contactor cover and lift off.
5. To access the time delay relays and the general purpose relay, remove the lower sheet metal. Then remove the two philips head screws and remove electrical box cover. (Models 505/510 only.)

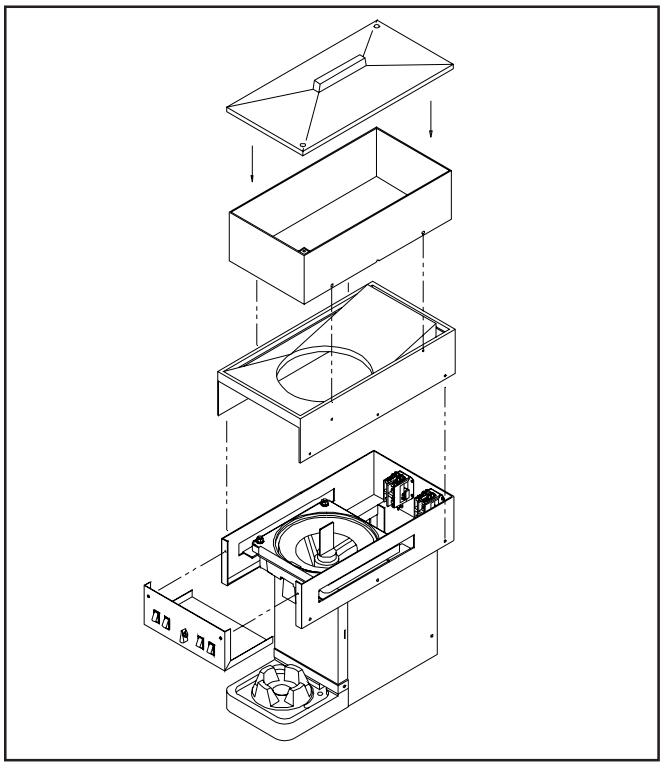

Fig. 5 - Electrical Access

The components are now completely accessible and any testing or service can be done.

IMPORTANT NOTE
When replacing electrical components identify wires before removing or place the wires from the existing component onto the replacement component one at a time to avoid errors.

To replace electrical components perform the following procedures:

Power on/off switch
1. Identify and remove the wires from the switch.
2. Squeeze the four retaining tabs together and push the switch through the hole. Figure 6.

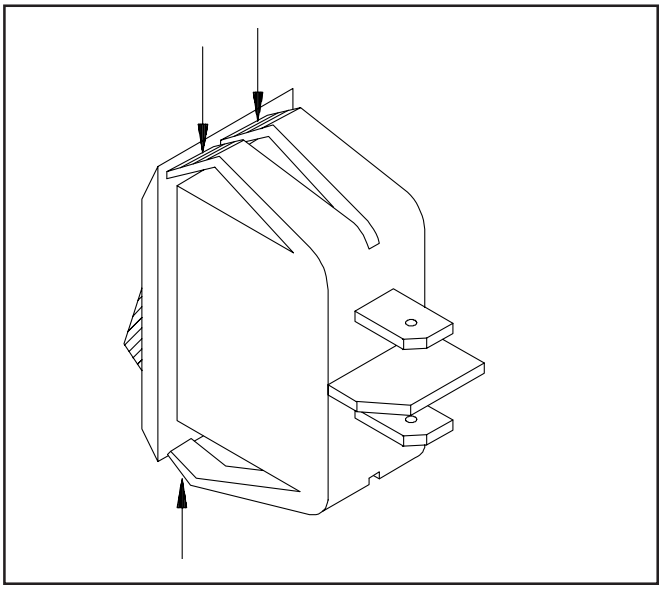

Fig. 6 - Switch Removal

3. Push the replacement switch through the hole with the red half of the rocker to the right side.
4. Reconnect the wires.

Blender High/Low Switch
1. Identify and remove the wires from the switch.
2. Squeeze the four retaining tabs together and push the switch through the hole.
3. Push the replacement switch through the hole with the red half of the rocker to the right side.
4. Reconnect the wires.

Blend Only Switch
1. Identify and remove the wires from the switch.
2. Squeeze the four retaining tabs together and push the switch through the hole.
3. Push the replacement switch through the hole with the protruding part of the rocker to the bottom.
4. Reconnect the wires.

Drink Selector Switch

The selector switch is sold as an assembly that includes the two potentiometers.

1. Remove the wire connecting the blender timer potentiometer to the time delay relay (Fig.7).

NOTE

On Models S505/S510 the time delay relays are located in the rear of the shaver. Remove the lower back sheet metal and electrical box cover to access.

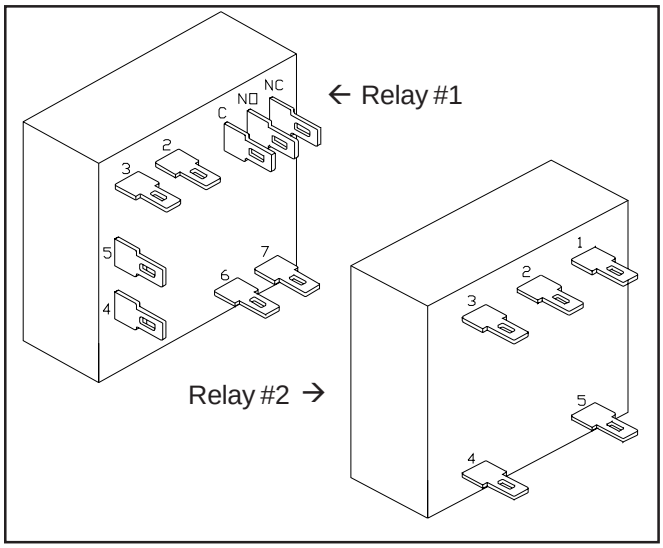

Fig. 7 - Time Delay Relay

2. Remove the wire connecting the shave timer potentiometer to the time delay relay.
3. Remove the wire connecting the selector switch to the blender time delay relay.
4. Remove the wire connecting the selector switch to the shave time delay relay.
5. To remove the rotary selector switch knob loosen the small set screw located at the bottom of the knob and pull the knob off.
6. Remove the retaining nuts from the selector switch and the two potentiometers (Fig.8). Then remove the complete assembly.
7. To install the replacement switch assembly reverse steps 1 through 6.

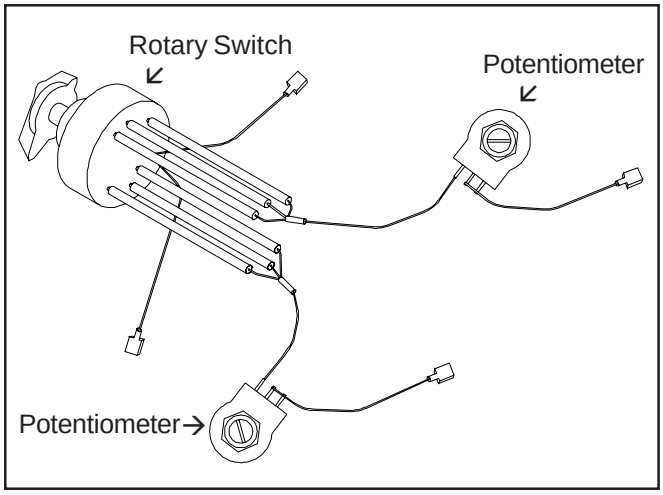

Fig. 8 - Drink Selector Switch

Blend Start Switch

1. Identify and remove the wires from the switch.
2. Squeeze the four retaining tabs together and push the switch through the hole.
3. Push the replacement switch through the hole with the protruding part of the rocker to the bottom.
4. Reconnect the wires.

Shave Start Switch

1. Identify and remove the wires from the switch.
2. Squeeze the four retaining tabs together and push the switch through the hole.
3. Push the replacement switch through the hole with the protruding part of the rocker to the bottom.
4. Reconnect the wires.

Shave Only Switch

1. Identify and remove the wires from the switch.
2. Squeeze the four retaining tabs together and push the switch through the hole.
3. Push the replacement switch through the hole with the protruding part of the rocker to the bottom.
4. Reconnect the wires.

Blend Potentiometer

1. Unsolder and remove the two wires.

NOTE

Two legs of the potentiometer are jumpered, the replacement must be connected the same way.

2. Remove the retaining nut and remove the potentiometer. Take note where the shakeproof washer is located.
3. Install the replacement potentiometer and shakeproof washer, then install and tighten the retaining nut.
4. Reattach wires and solder.

Shave Potentiometer

1. Unsolder and remove the two wires.

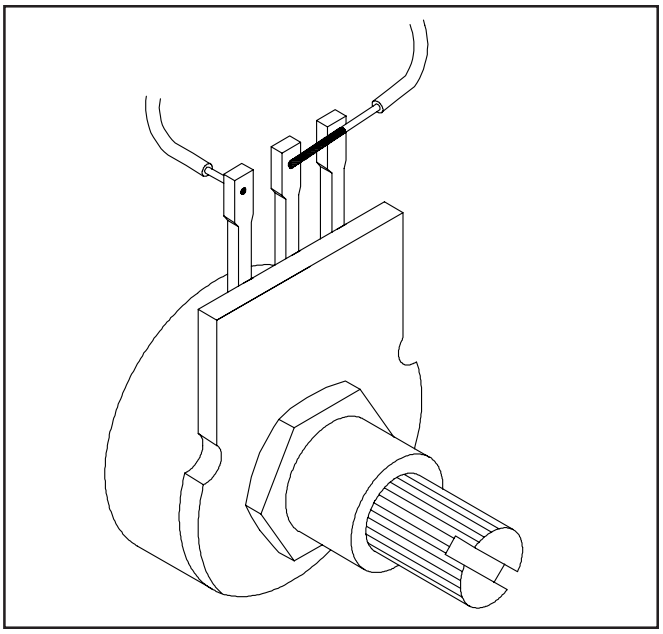

Fig. 9 - Potentiometer

NOTE

Two legs of the potentiometer are jumpered, the replacement must be connected the same way (Fig.9).

2. Remove the retaining nut and remove the potentiometer. Take note where the shakeproof washer is located.
3. Install the replacement potentiometer and shakeproof washer, then install and tighten the retaining nut.
4. Reattach wires and solder.

Safety Switch

1. Remove the three wires from the switch.
2. Remove the two retaining screws and spacers (Fig.10).
3. Install replacement switch using the spacers between the switch and frame. Tighten screws.

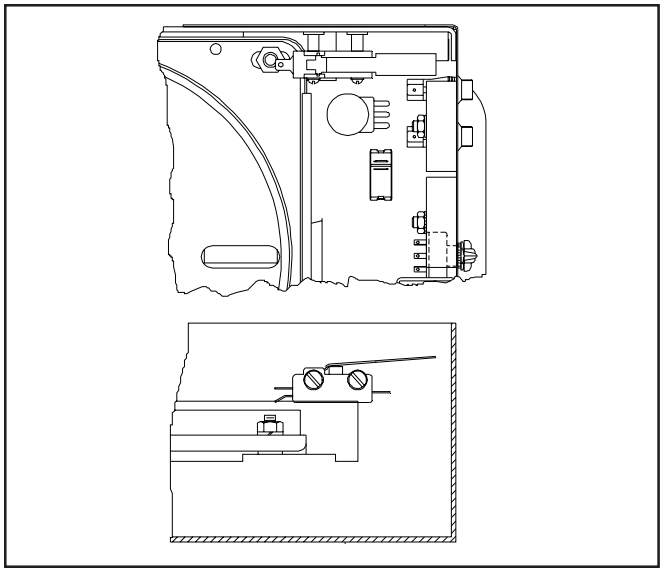

Fig. 10 - Safety Switch

Blender Contactor

1. Identify and remove the wires from the contactor.
2. Remove the two hex head nuts and star washers, then lift out contactor (Fig. 11).

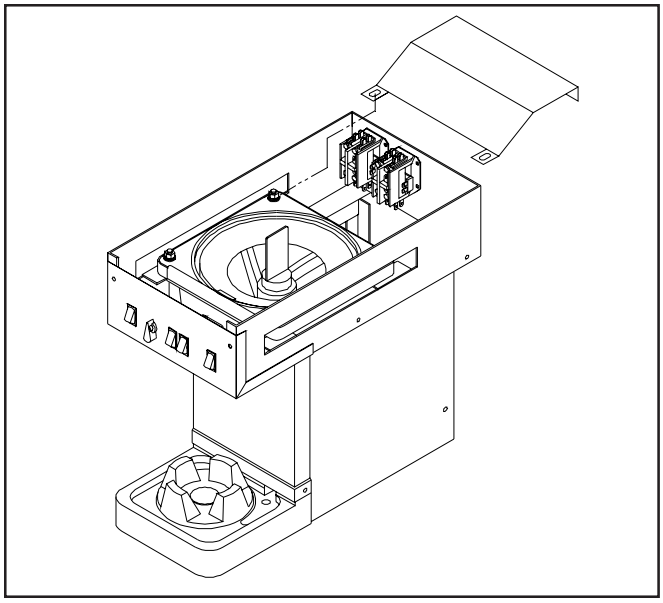

Fig. 11 - Contactors

3. Install replacement contactor with L1 & L2 terminals up.
4. Install the star washers and hex nuts, then tighten securely.
5. Reconnect the wires.

Shaver Contactor

1. Identify and remove the wires from the contactor.
2. Remove the two hex head nuts and star washers, then lift out contactor.
3. Install replacement contactor with L1 & L2 terminals up.
4. Install the star washers and hex nuts, then tighten securely.
5. Reconnect the wires.

Blender Time Delay Relay

1. Identify and remove the wires from the delay relay.
2. Remove the hex head nut and star washer, then slide off from weld stud (Fig.12).

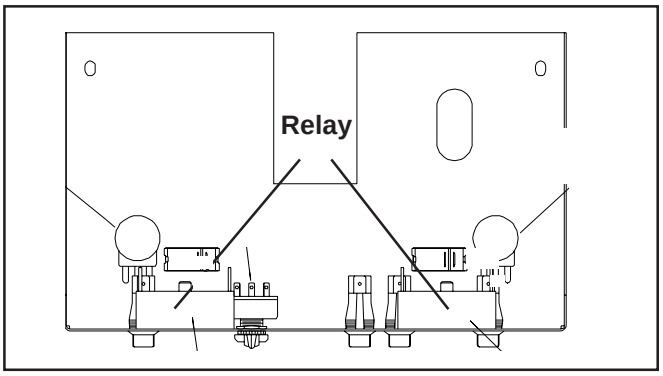

Fig. 12 - Time Delay Relay

3. Install the replacement part in the same position.
4. Install star washer and hex nut, then tighten.
5. Reconnect the wires.

Shaver Time Delay Relay

1. Identify and remove the wires from the time delay relay.
2. Remove the hex head nut and star washer, then slide off from weld stud.
3. Install the replacement part in the same position.
4. Install star washer and hex nut, then tighten.
5. Reconnect the wires.

Blender Start Time Delay Relay (Some Models)

1. Remove the varistor.
2. Identify and remove the wires from the time delay relay.
3. Remove the hex head nut and start washers, then slide off from weld stud.
4. Install replacement part in the same position.
5. Install star washer and hex nut, then tighten.
6. Reconnect the wires.

General Purpose Relay

1. Identify and remove wires from the relay.
2. Remove the two retaining screws and star washers.
3. Install the replacement part in the same position and secure with the screws and star washers.
4. Reconnect the wires.

SECTION 6
MECHANICAL

WARNING

WHEN WORKING ON MECHANICAL DEVICES THAT ARE DESIGNED TO CUT, GRIND, OR SHAVE, EXTREME CAUTION MUST BE EXERCISED. TAKE PROPER PRECAUTIONS WHEN WORKING IN AREAS WHERE CUTTING BLADES CAN BE CONTACTED. FAILURE TO HEED THIS WARNING COULD RESULT IN INJURY.

Shaver Blade Replacement

1. Remove the six retaining screws from the electrical box, then pull down and out.
2. Remove the protective strip (some models) and pull the drip pan cover straight out (Fig.13).

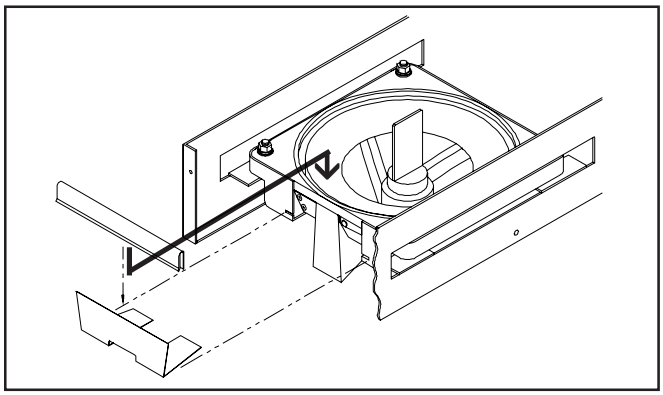

Fig. 13 - Shaver Blade Replacement

3. Remove the ice discharge chute by removing the two screws.

WARNING

THE SHAVER BLADE IS EXTREMELY SHARP. TAKE THE PROPER PRECAUTIONS TO AVOID INJURY.

4. Remove the two screws holding the blade to the bracket. (Fig. 14)

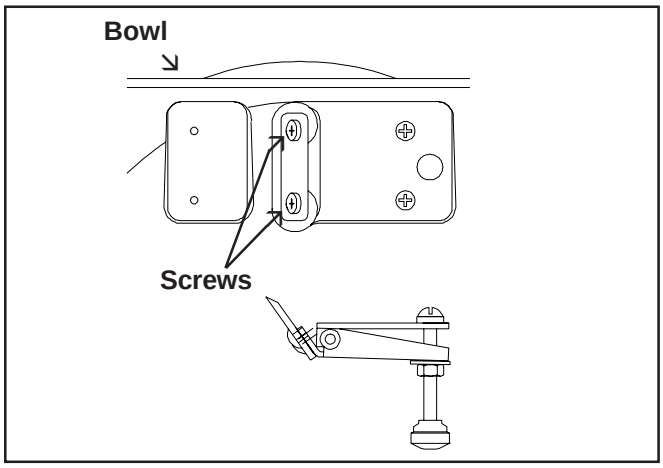

Fig. 14 - Shaver Blade

5. Properly dispose of the used blade.
6. Fasten the replacement blade to the bracket with the two screws and tighten securely.
7. Install the ice discharge chute and secure with the two screws.
8. Install the drip pan cover and protective strip.
9. Install the electrical box and secure with the six screws.

Blender Drive Clutch Replacement

1. To remove the clutch hold the shaft with a straight bladed screwdriver and turn the clutch clockwise (left hand thread).
2. To install, thread the replacement clutch onto the shaft counter-clockwise. Then hold the shaft with a straight bladed screwdriver and tighten.

NOTE

Some early models did not have the screwdriver slot in the shaft. Access from the bottom and hold the pulley to remove the clutch.

Major Component Replacements

For major component replacements, you must first remove the necessary sheet metal and plastic panels. Then remove the four screws and star washers holding the slotted cover at the bottom of the unit.

Bearing Replacement

When replacing bearings and seals a few simple rules must be followed to secure longevity of the replacement parts.

1. Make certain you have all the parts and tooling to complete the job.
2. Maintain a clean work area.
3. Follow all instructions furnished with parts and/or tooling.
4. Make certain all set screws are loosened or removed and remove all snap rings before pressing out parts.
5. Use proper tooling when pressing out parts to avoid damage.
6. Thoroughly clean all parts to be reused.
7. When pressing in bearings or shafts, use tooling that contacts the bearing race offering the greatest resistance.

Blender Drive Bearing Replacement

1. Remove the blender drive clutch by holding the shaft with a straight bladed screwdriver and turning the clutch counter-clockwise (left hand thread).
2. Loosen the four retaining nuts holding the blender drive motor mounting plate and slide toward the front to loosen the belt.
3. Remove the drive belt.
4. Remove the blender drive pulley by loosening the two set screws and pulling straight off.

NOTE

For disassembly see parts breakdown on Pg.20.

5. Remove the wave washer and flat washer.
6. Remove the flat head countersunk screws and remove the bearing assembly.
7. Remove the shaft and flat washer from the bearing assembly (slip fit). If stuck use a small arbor press.
8. To remove the bearings use an inside bearing puller. An alternate method is to place the bearing retainer with the small end down inside a 1-1/4" socket or a short piece of pipe on a solid surface. Then using a small drift punch and hammer go through the top bearing to the lower bearing and tap the inner race moving the punch after each tap in a circular motion. The second bearing can be pushed out with a small arbor press.
9. Inspect the bearing retainer for any damage, if damaged replace.
10. Use a small arbor press to push in the replacement bearings, use a tool that fully contacts the outer race to avoid damaging the replacement bearing.

NOTE

Many bearings are destroyed during assembly because of improper assembly methods and tooling. Pressure exerted on the race offering little or no resistance to push on a race of offering a much greater resistance can cause cracks in the balls or race and ultimate failure.

11. Reverse steps 1 through 7 to reassemble and replace sheet metal and plastic panels.

Blend Motor Replacement

1. Cut the three wire ties.

NOTE

Identify wires before removing.

2. Cut the wires necessary for motor removal as close to the connector as possible.
3. Loosen the four hex head screws and move the blender motor forward then remove the belt (Fig.15).

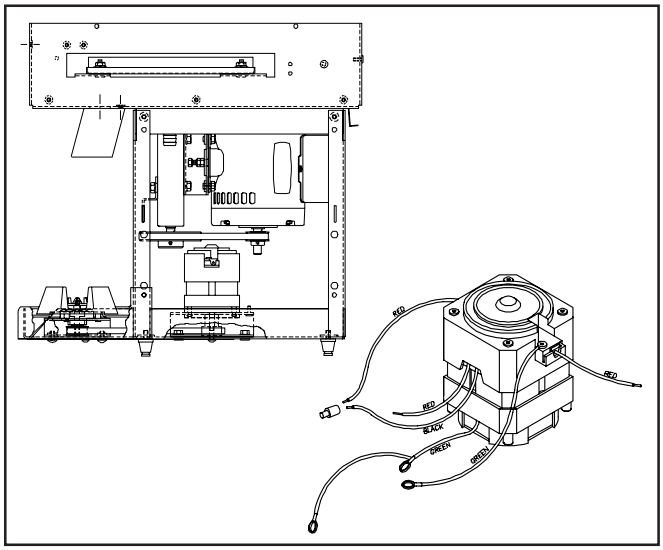

Fig. 15 - Blender Motor

4. Loosen the shaver drive motor adjustment screw and remove the belt.

NOTE:

Mark the location of the pulley's before removing. When re-installing pulleys make certain one of the set screws is centered on the flat of the shaft if applicable.

5. Remove the pulley from the shaver motor by loosening the two set screws and sliding the pulley off.
6. Loosen the two set screws on the impeller drive pulley.
7. Remove the four hex head screws from the blender drive mounting plate, and move to the side. You can now remove the impeller drive pulley and lift out the blender drive assembly.
8. Loosen the two set screws on the blender motor pulley, then turn counter-clockwise to remove. (Left hand thread)
9. Remove the two ground wires by removing the hex head nut and star washer.
10. Remove the four retaining screws and star washers to separate the motor from the mounting plate.
11. To reassembly reverse steps 3 through 10, then reconnect the necessary wires securely.
12. Protect brush retainers with electrical tape.

Shave Motor Replacement

1. Cut the tie strap holding the black and white wires leading from the drive motor to the terminal block and contactor.
2. Loosen the belt tension adjustment screws by first loosening the jam nuts then turning the adjustment screw counter-clockwise (Fig.16).

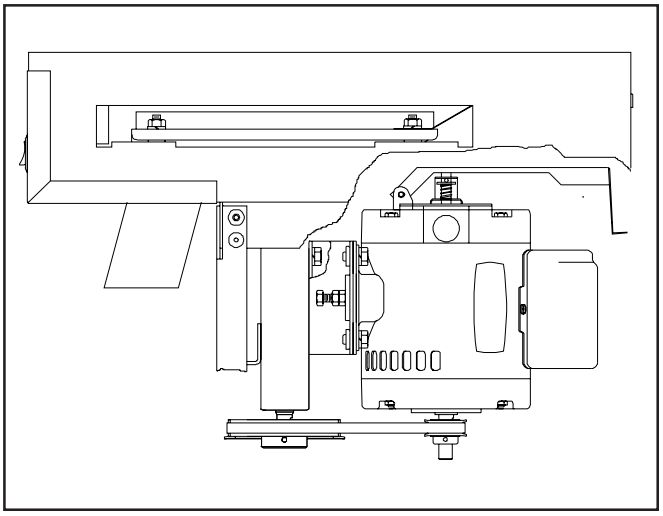

Fig. 16 - Shaver Drive Motor

3. Remove the drive belt.
4. Remove the cap screws holding the drive motor to the mounting bracket. Lower the motor down and out the back.
5. Remove the electrical cover from the motor and disconnect the necessary wires.

NOTE

All motor wires are identified with letters and numbers. Make a note of which wires go where.

6. Loosen the two set screws and remove the pulley.
7. Remove the two screws and remove the reset lever assembly.
8. To reassemble reverse steps 1 through 7.

Shaver Bearing Replacement

1. To remove the front electrical box, remove the six retaining screws and pull down and out.
2. Remove the agitator and impellor. Refer to Pg.19.
3. Remove the shaver drive motor. Refer to Pg.13.
4. Remove the two cap screws and lock washers holding the drive bearing assembly to the frame (Fig.17).

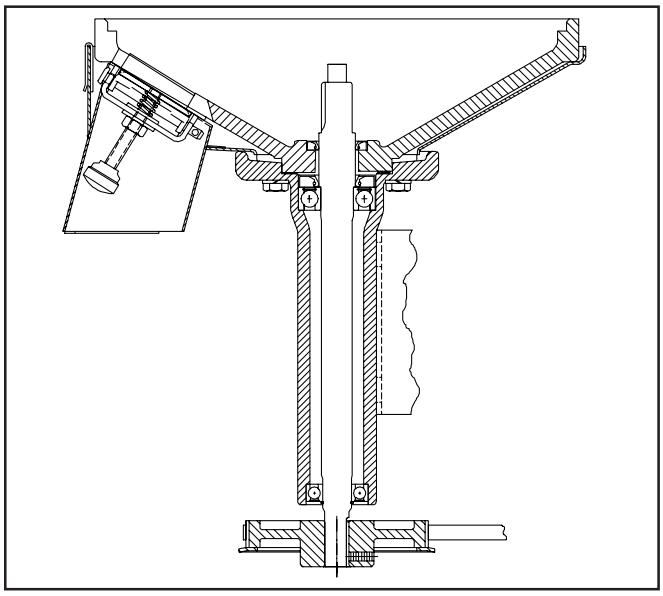

Fig. 17 - Drive Bearing Assembly

5. Remove the two screws and spacers from the safety switch and move the safety switch to the side.
6. Remove the four hex head nuts and the lock washers from the bowl.
7. Remove the contactor cover.

NOTE

Cover the ice blade with a couple layer of duct tape to avoid injury when removing the bowl from the shaver frame.

8. Lift the bowl and drive bearing assembly up and out.
9. Remove the drive pulley by loosening the two set screws and sliding off.
10. Remove the four cap screws and lock washers holding the drive motor bracket to the drive bearing assembly and remove the bracket.
11. Remove the four cap screws and lock washers holding the drive bearing assembly to the bowl and separate.
12. Remove the snap ring from the shaft, then use an arbor press to press the shaft out through the top.

NOTE

Use proper tooling when pressing out bearings to avoid damage to the castings.

13. Press out the lower bearing, then the top bearing and seal.

NOTE

When replacing bearings you must replace seals to protect the bearings.

SECTION 7 TROUBLESHOOTING		
Problem	**Cause**	**Correction**
Nothing runs.	Not plugged in.	Check plug.
	Breaker Tripped or fuse blown.	Reset or replace.
	Safety switch not activated.	Check hopper cover.
	Faulty on/off switch.	Replace switch.
Impeller doesn't turn - blender runs.	Motor thermal overload tripped.	Allow motor to cool & reset overload.
	Key missing from impeller shaft.	Replace key.
	Impeller jammed.	Check impeller for obstruction.
	Belt off or broken.	Check belt, replace if necessary.
	Pulleys off or broken.	Check pulleys, replace if necessary.
	Contactor not closing.	Check pilot circuit.
	Bearing seized.	Replace bearings.
	Faulty motor.	Replace motor.
Blender doesn't run, impeller turns.	Blender motor out on thermal overload.	Wait 15 to 20 minutes for overload to reset.
	Belt off or broken.	Check belt, replace if necessary.
	Bearings seized.	Replace bearings.
	Pulleys off or broken.	Check pulleys, replace if necessary.
	Contactor not closing.	Check pilot circuit.

Problem	Cause	Correction
Impeller turns but doesn't dispense ice.	No ice in hopper.	Fill with ice.
	Ice bridged in hopper.	Break up ice.
	Ice chute blocked.	Unplug shaver, then clear ice chute.
	Shaving blade out of adjustment.	Readjust shaving blade.
Ice shaving too fine.	Shaving blade set too low.	Set blade to a higher position.
Ice shaving too coarse.	Shaving blade set too high.	Set blade to a lower position.
Ice shaver will not stop.	Faulty selector switch or connecting wiring.	Check wiring and switch, replace if necessary.
	Faulty timer.	Replace timer.
	Faulty potentiometer.	Replace potentiometer.

SECTION 8
DRAWINGS

S100
S500/502+

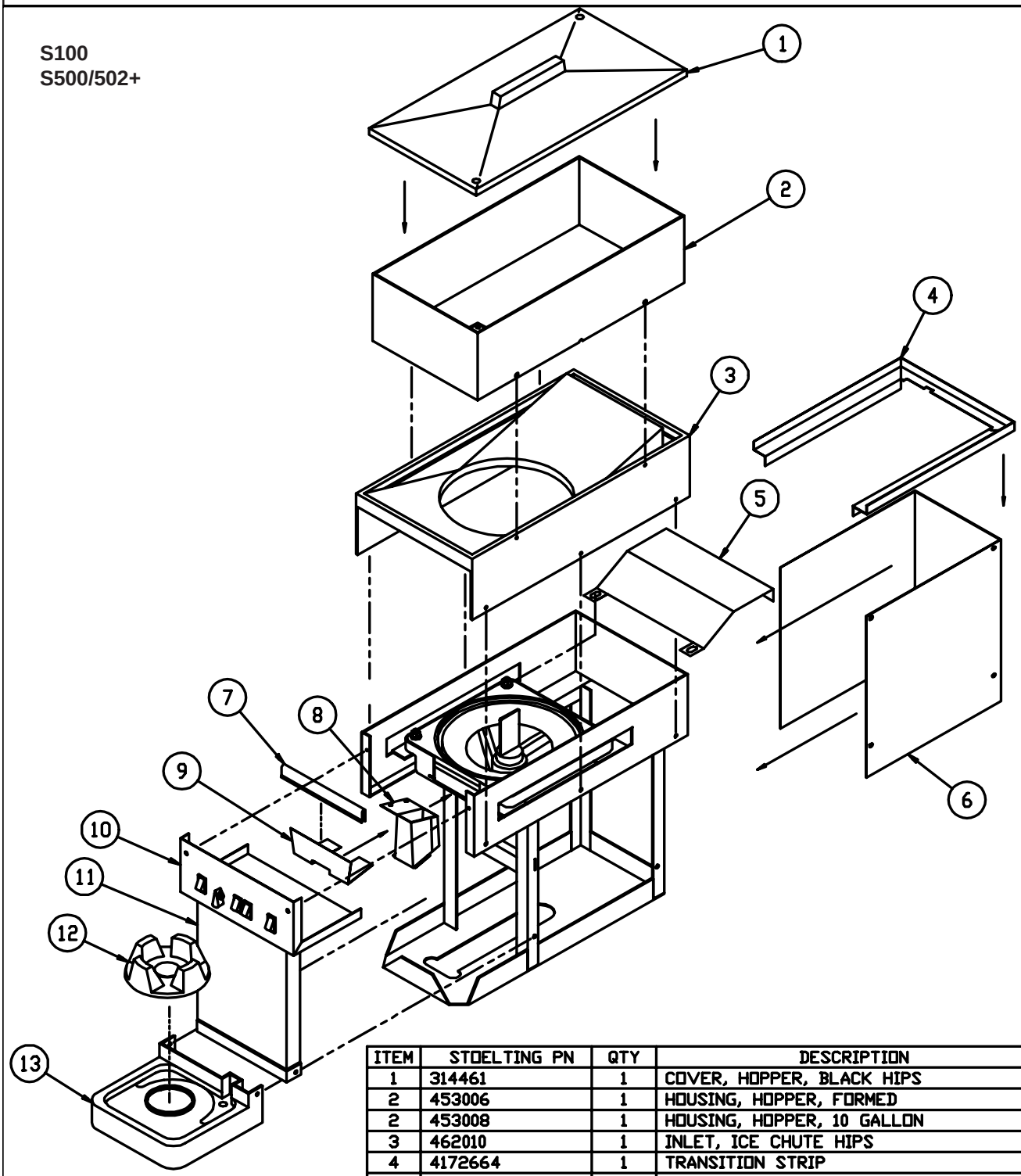

ITEM	STOELTING PN	QTY	DESCRIPTION
1	314461	1	COVER, HOPPER, BLACK HIPS
2	453006	1	HOUSING, HOPPER, FORMED
2	453008	1	HOUSING, HOPPER, 10 GALLON
3	462010	1	INLET, ICE CHUTE HIPS
4	4172664	1	TRANSITION STRIP
5	3172818	1	COVER, CONTACTOR
6	4172817	1	PANEL, REAR & SIDE
7	714039-03	7.5'	STRIP PROTECTIVE LINER
8	4172872	1	DISCHARGE CHUTE
9	3172692	1	DRIP PAN COVER
10	3172982	1	FRONT PANEL & SWITCH ASSY
11	556572	1	PANEL,SPLASH, VACUUM FORMED
12	142076	1	SELF-ALIGN RING BLACK
13	744270	1	TRAY, DRIP

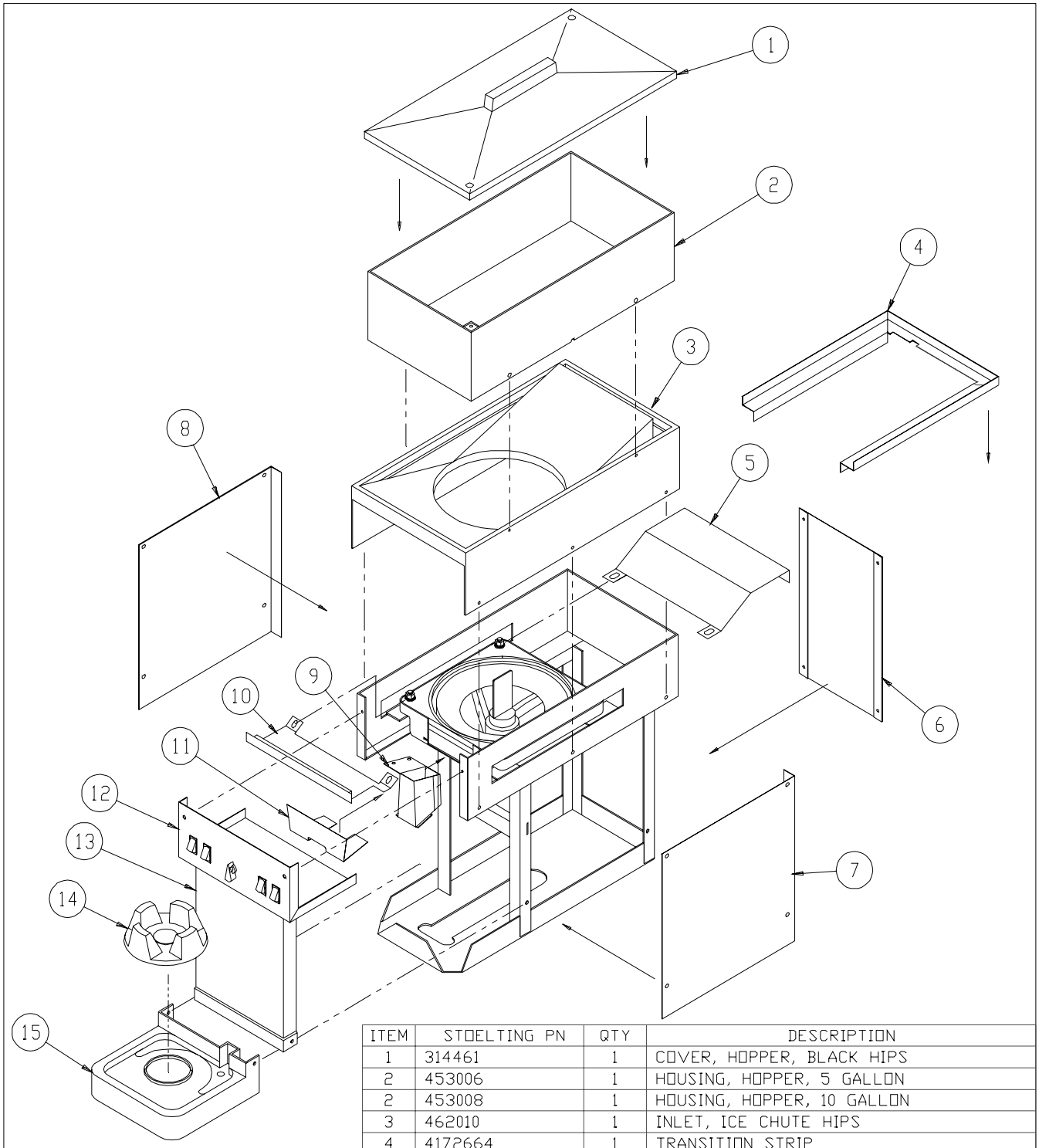

ITEM	STOELTING PN	QTY	DESCRIPTION
1	314461	1	COVER, HOPPER, BLACK HIPS
2	453006	1	HOUSING, HOPPER, 5 GALLON
2	453008	1	HOUSING, HOPPER, 10 GALLON
3	462010	1	INLET, ICE CHUTE HIPS
4	4172664	1	TRANSITION STRIP
5	3172818	1	COVER, CONTACTOR
6	3177388	1	PANEL, REAR
7	3177386	1	PANEL, SIDE, RIGHT
8	3177387	1	PANEL, SIDE, LEFT
9	4177339	1	DISCHARGE CHUTE
10	2177410	1	SHIELD
11	3172692	1	DRIP PAN COVER
12	3177331	1	FRONT PANEL & SWITCH ASSY
13	556572	1	PANEL, SPLASH, VACUUM FORMED
14	142076	1	SELF-ALIGNING RING, BLACK
15	744270	1	TRAY, DRIP

ITEM	STOELTING PN	QTY	DESCRIPTION
1	647653	1	SCREW,MACH 10-24 X 3/8 TRS HD
2	3172657	1	BLADE ASSEMBLY

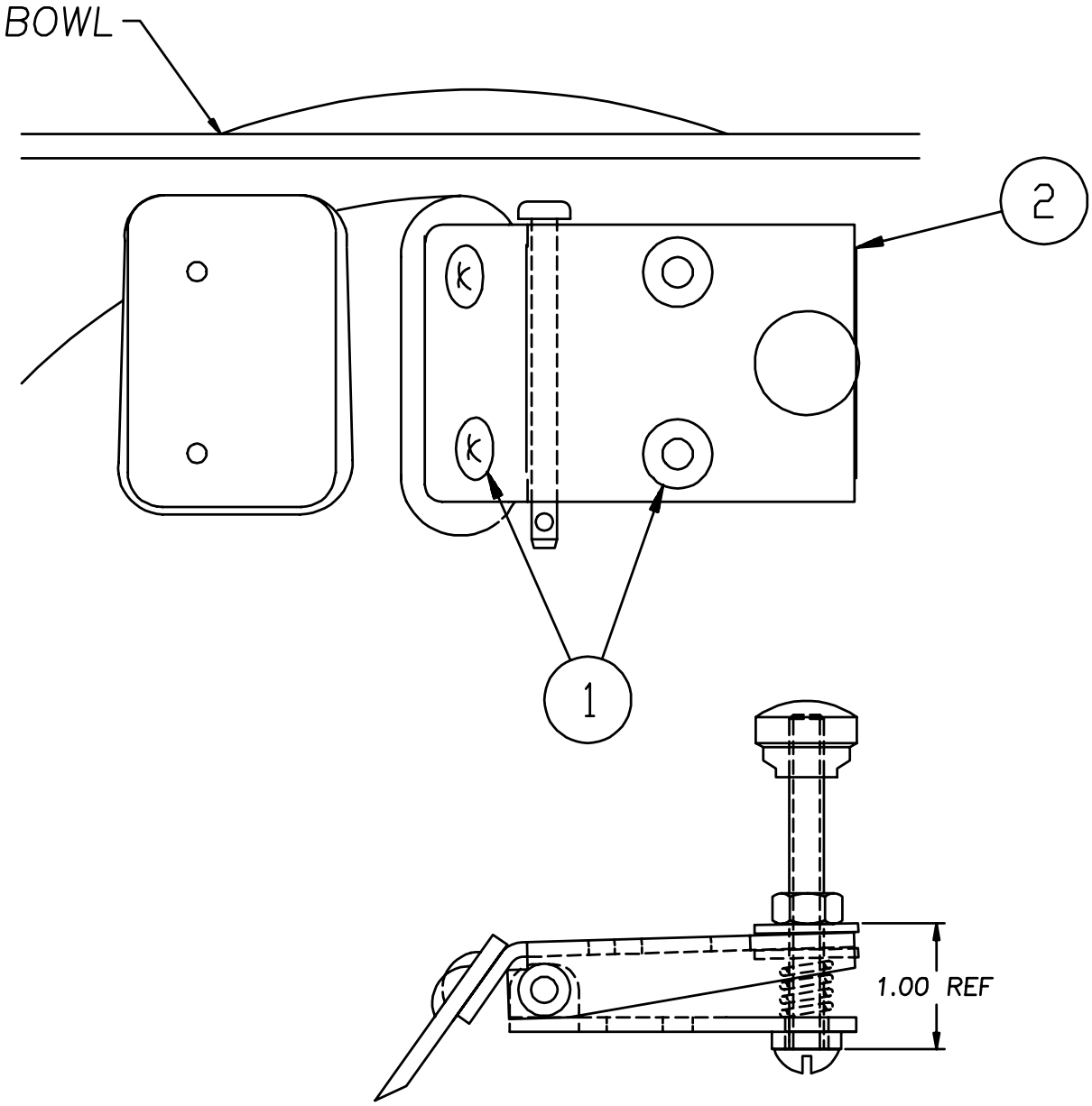

ITEM	STOELTING PN	QTY	DESCRIPTION
1	2172683	1	AGITATOR
2	624677	1	RING O 1-1/8X1-3/8X1/8 70 DURO
3	1172662	1	KEY, IMPELLER/DRIVE SHAFT
4	4172673	1	IMPELLER, MACHINED

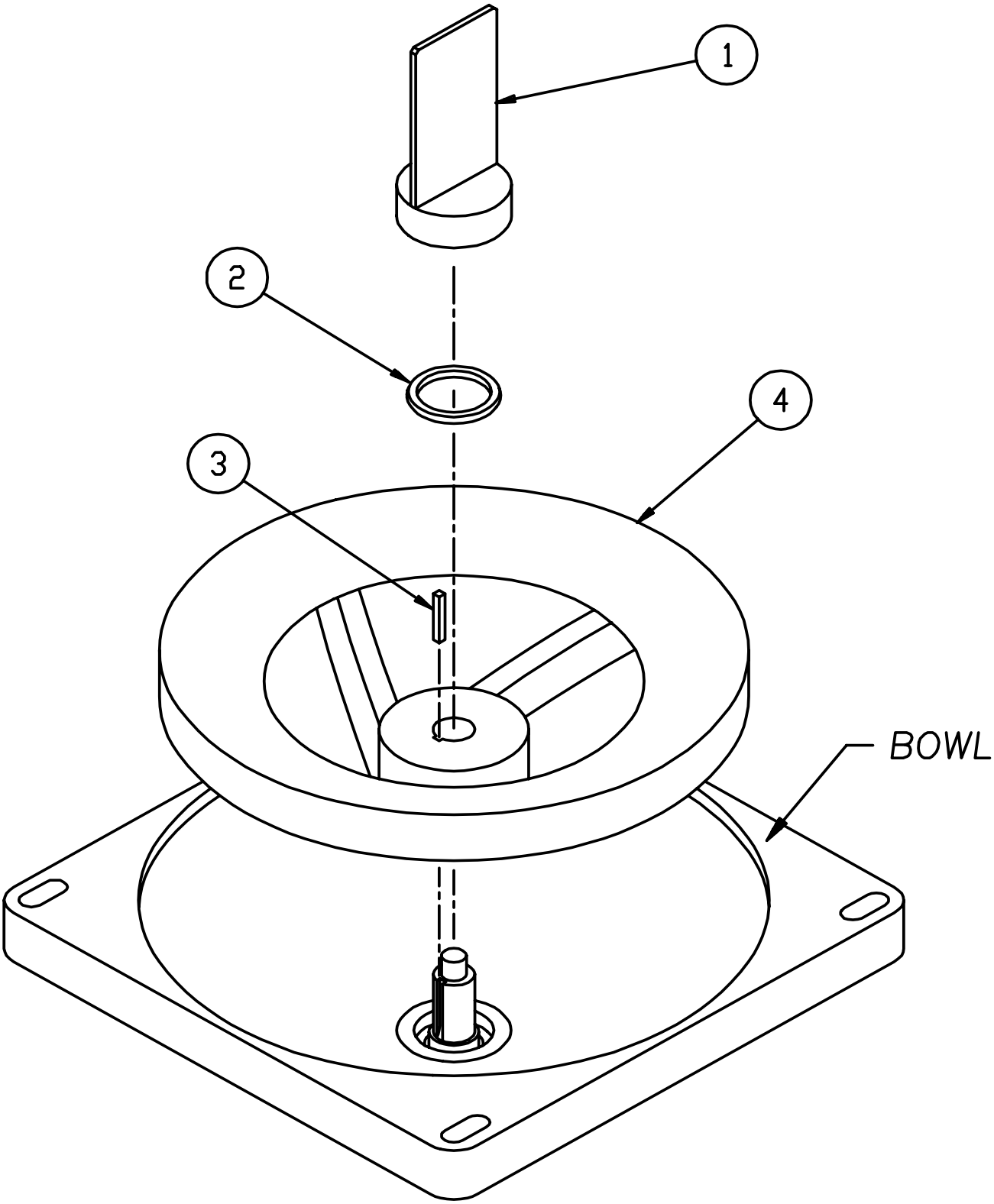

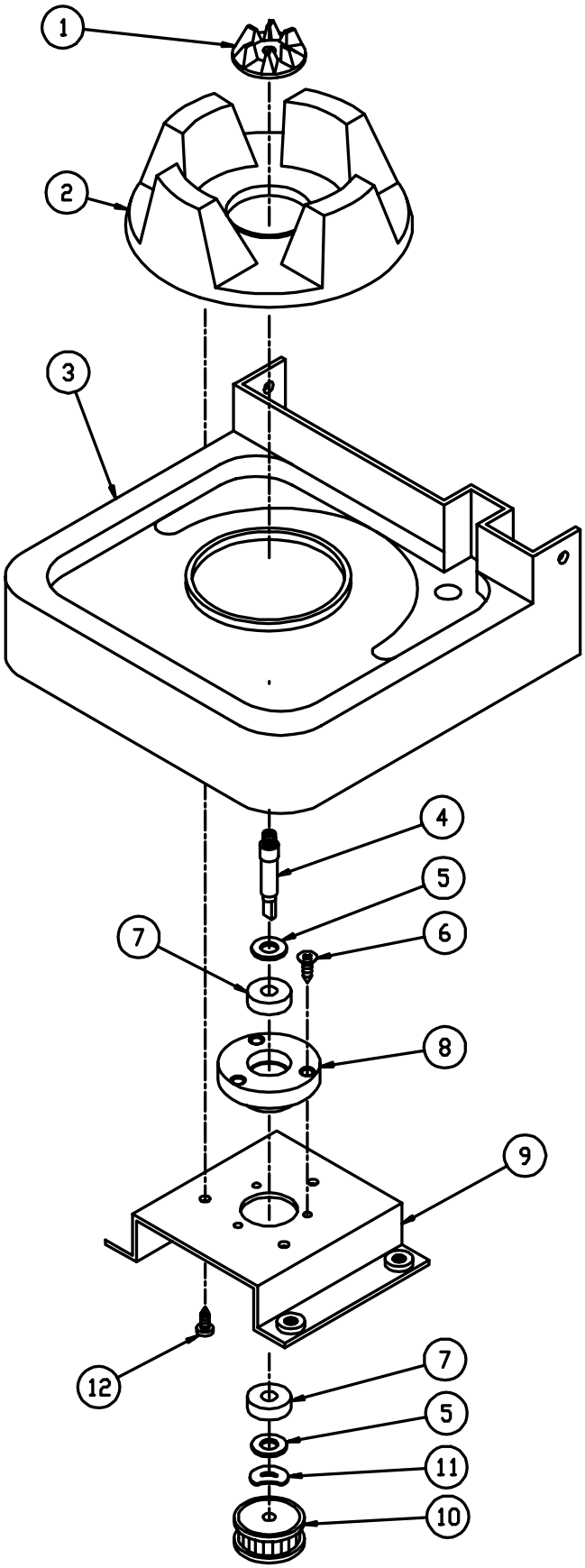

ITEM	STOELTING PN	QTY	DESCRIPTION
1	268006	1	CLUTCH, BLENDER DRIVE
2	142076	1	BASE, 4 POST BLENDER
3	744270	1	DRIP TRAY
4	1172682	1	DRIVE SHAFT, BLENDER
5	766460	2	WASHER ROUND 11/16X11/32 SS
6	647700	3	SCREW, MACH 10-24 X 5/8 FLAT HEAD
7	146046	2	BEARING, BALL 22X8X7mm
8	1172685	1	BEARING RETAINER
9	3172800	1	BLENDER DRIVE MOUNTING BRACKET
10	599144	1	PULLEY,TIMING,5MM,20TH,1/4 BORE
11	767528	1	WASHER, SPRING 5/16
12	649084	3	SCREW, TAPPING #8-18 .50 LONG

ITEM	STOELTING PN	QTY	DESCRIPTION
1	318417	1	HAMILTON BEACH PITCHER, 1/2 GAL
2	396439	1	GASKET, CUTTER ASSEMBLY
3	1172873	1	BLADE, BLENDER
4	162005	1	BLADE UNIT W/ CLUTCH ASSY
5	538618	1	NUT, CHROME, PITCHER BOTTOM

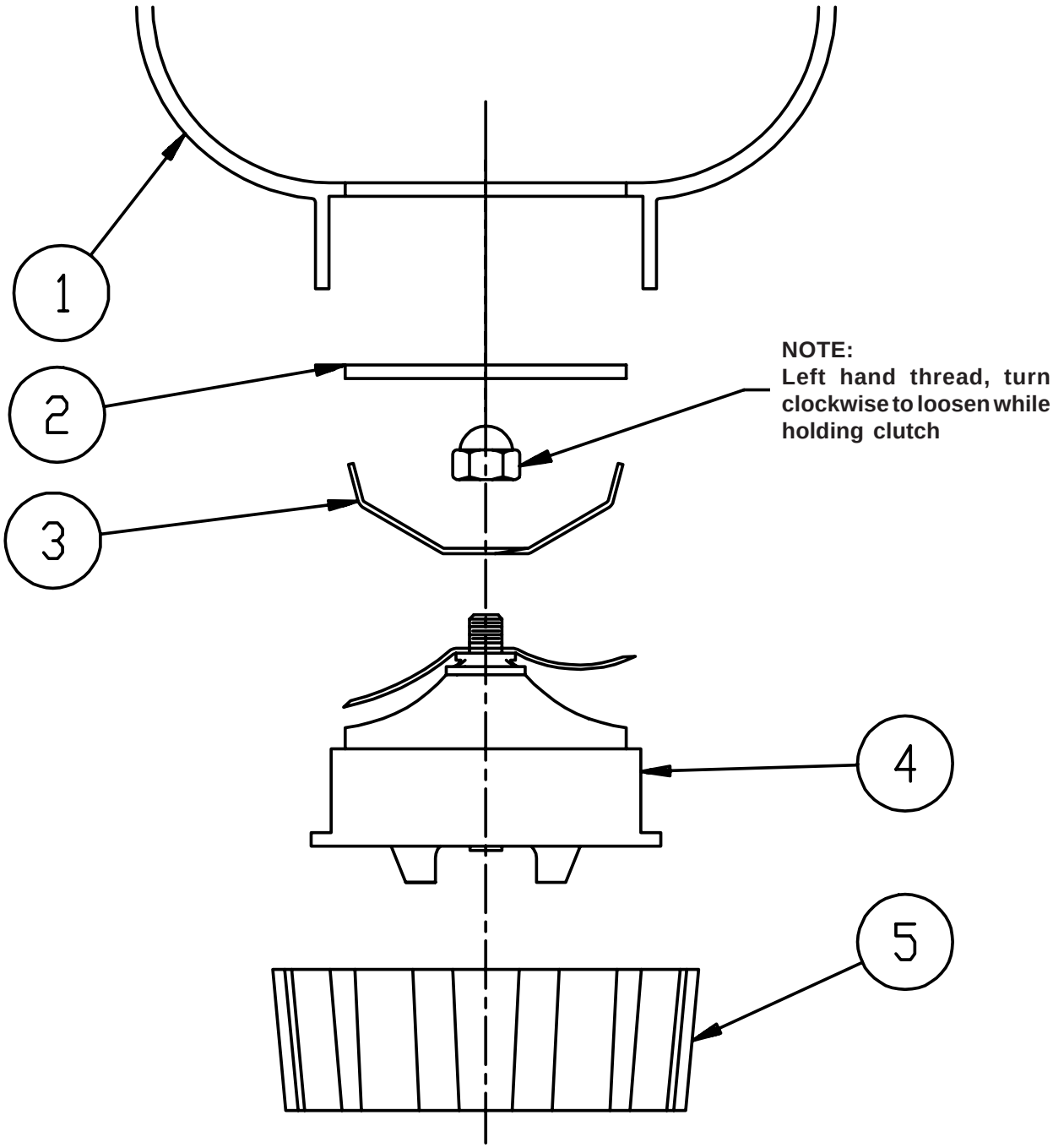

ITEM	STOELTING PN	QTY	DESCRIPTION
1	667042	1	SEAL, .75 SHAFT RUBBER COATED
2	667048	1	SEAL, .75 SHAFT, 1.579 OD, .25 WIDE
3	146195	1	BEARING BALL .6693 ID
4	625421	1	RING, RETAINING EXT .594 SHAFT
5	146150	1	BEARING, BALL 32 X 15 X 9

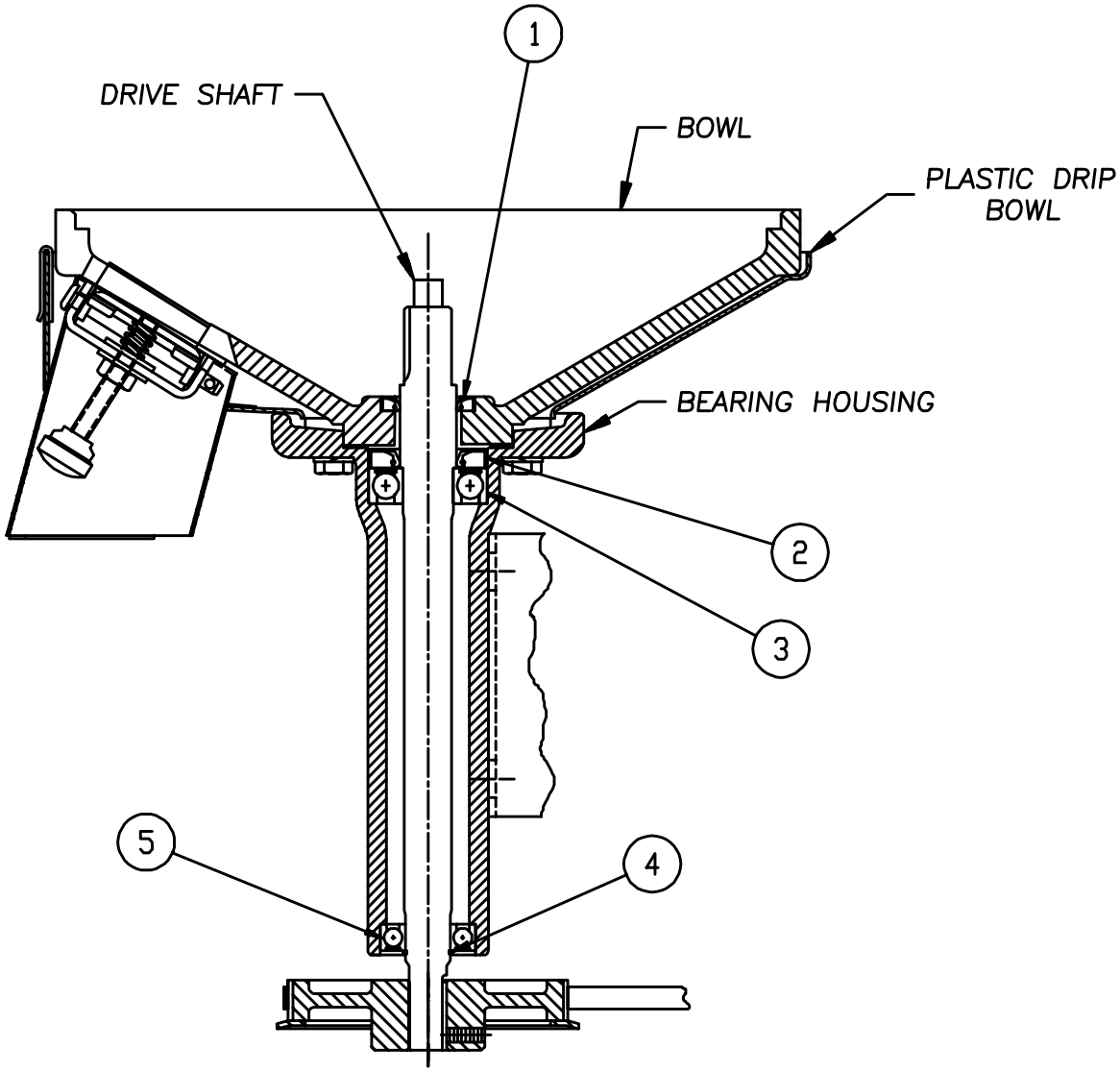

ITEM	STOELTING PN	QTY	DESCRIPTION
1	3172801	1	BRACKET, BLENDER MOTOR
2	522407	1	MOTOR ASSY, BLENDER 2 SPEED
3	649090	4	SCREW, TAPPING #8-18 .75 LONG
4	766940	4	WASHER SHAKEPROOF 8 ZINC PLATE

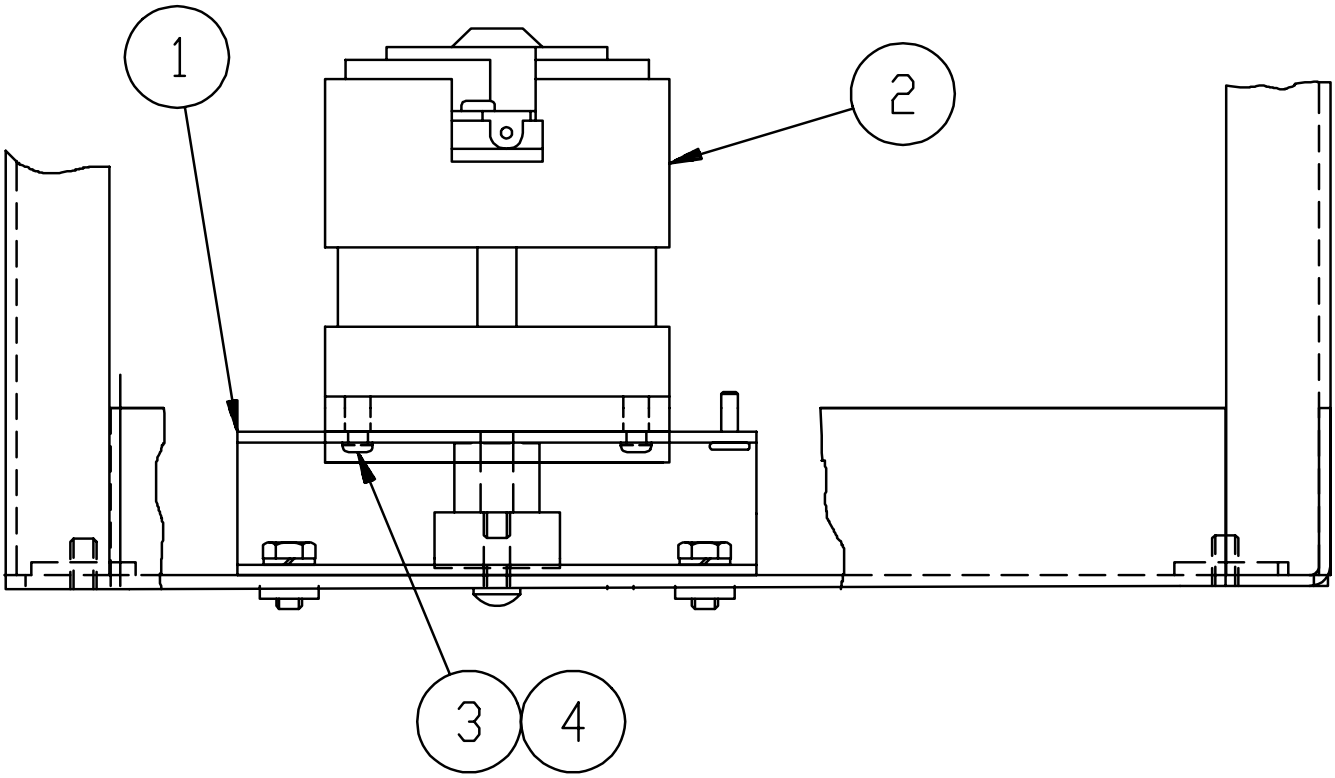

ITEM	STOELTING PN	QTY	DESCRIPTION
1	150810	1	BELT, TIMING 5MM 9MMW 167 TOOTH
2	599144	1	PULLEY, TIMING 5MM 20TH, 1/4 BORE
3	599146	1	PULLEY, TIMING 5MM 20TH, 1/4 LH THRD

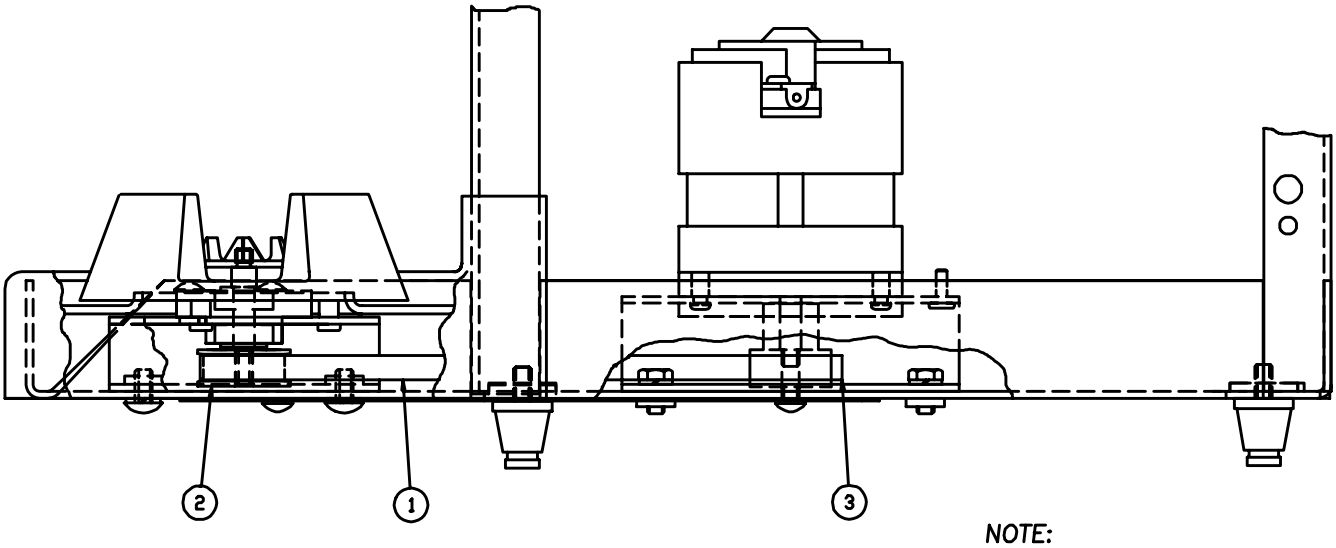

NOTE:
ADJUST BELT TENSION TO OBTAIN MAX. DEFLECTION 1.0" MID-SPAN.

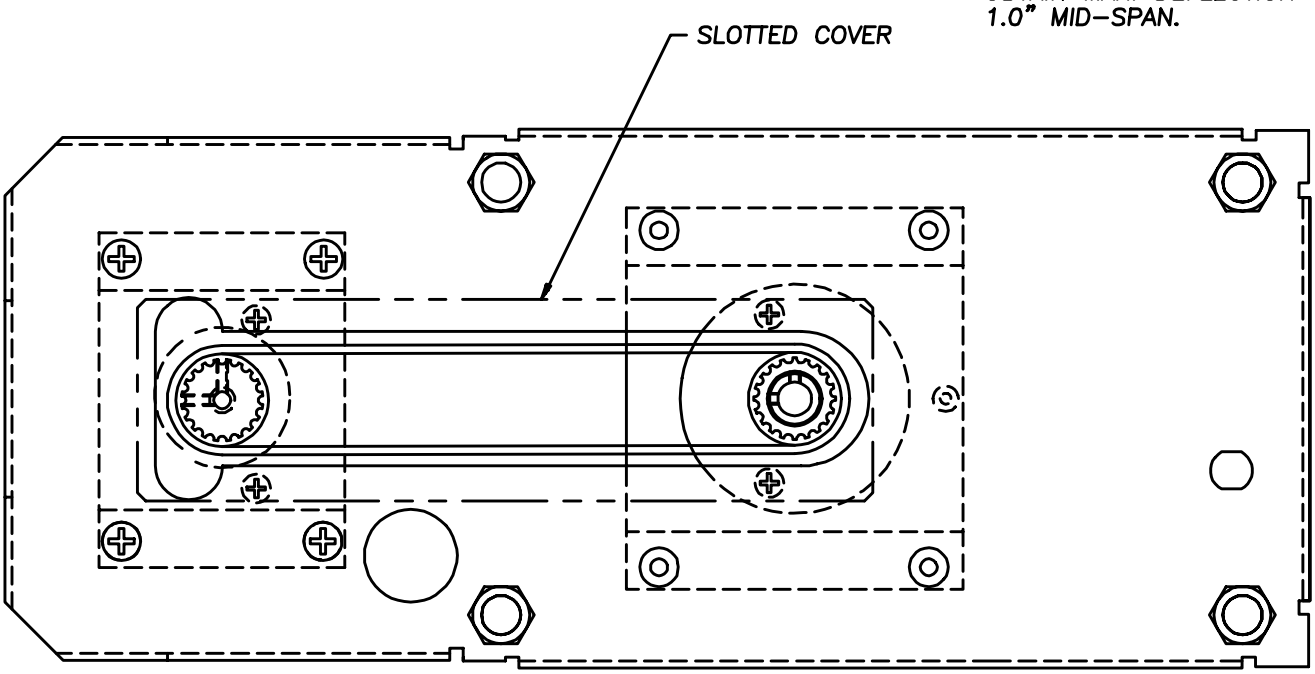

ITEM	STOELTING PN	QTY	DESCRIPTION
1	522365	1	MOTOR, 1/4 HP 208-230/60/1 1725RPM
2	644287	4	SCREW CAP 5/16-18 X 1/2 HX HD
3	766073	8	WASHER LOCK 5/16 .125X.078 MED
4	644307	4	SCREW CAP 5/16-18 X 3/4 HX HD
5	3172819	1	RESET ARM
6	649076	2	SCREW TAP 8-32 X 3/8 PAN HD PH
7	572408	1	PIN CLEVIS 1/4 DIA X .875 LONG
8	426006	1	HAIRPIN COTTER FOR 1/4" SHAFT
9	599143	1	PULLEY, TIMING 5mm 60TH 1/2 BORE
10	150808	1	BELT, TIMING 9 mm WIDE 95 TOOTH
11	599145	1	PULLEY, TIMING 5mm 20TH 1/2 BORE

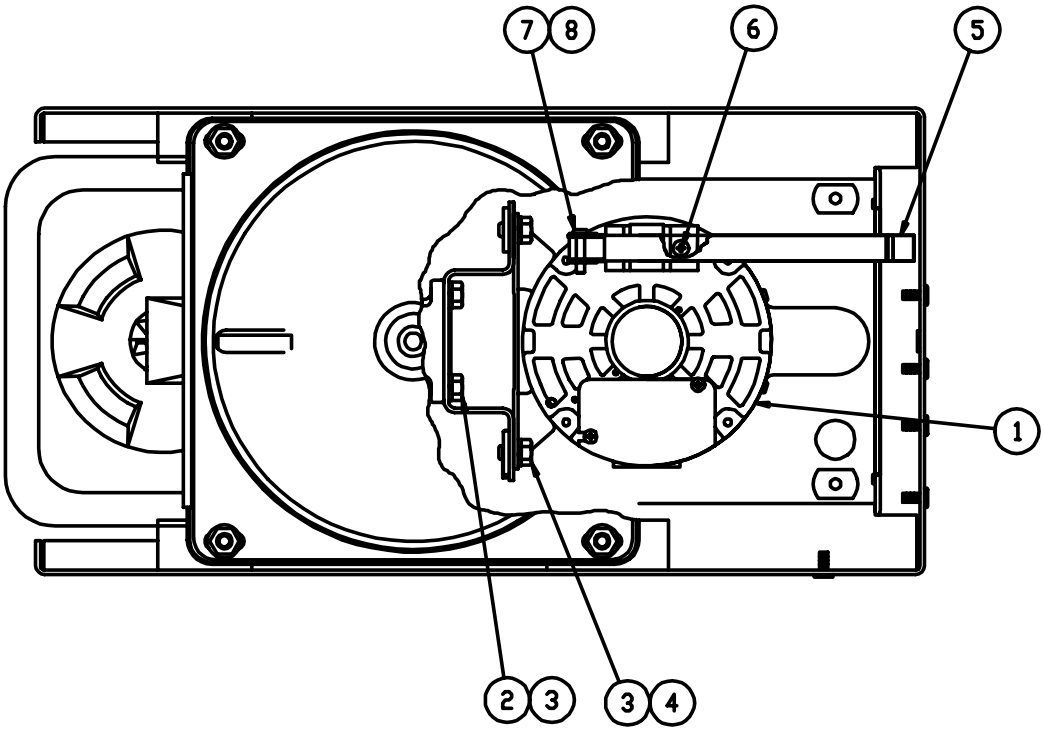

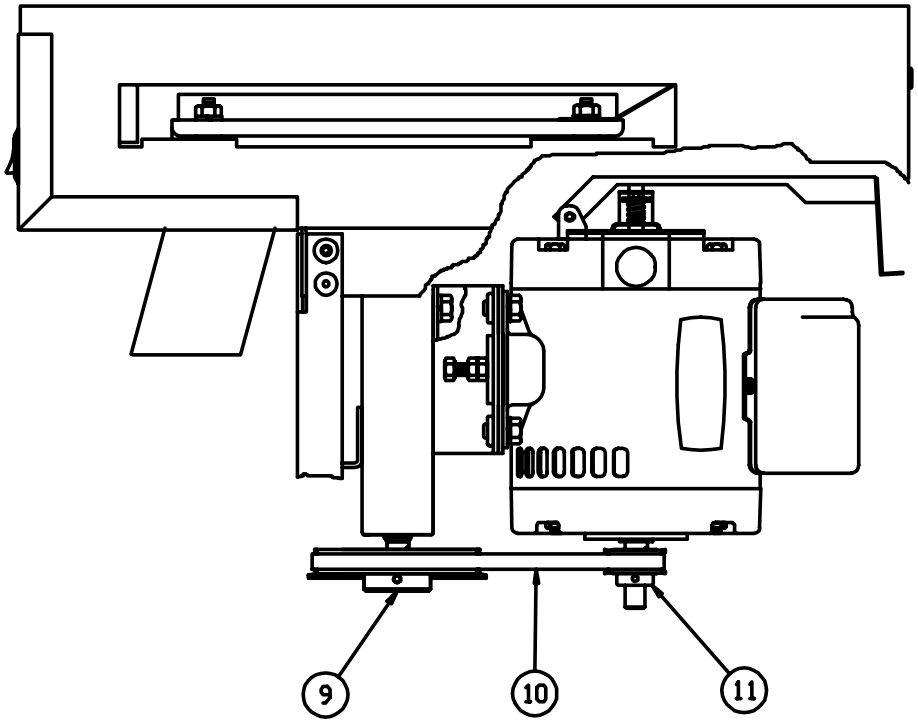

ITEM	STOELTING PN	QTY	DESCRIPTION
1	1170836	1	LIMIT SWITCH ASSY
2	692223	2	SPACER ALUMINUM .250 X .140 X
3	647456	2	SCREW MACH 6-32 X 1-1/4 RD HD
4	766933	2	WASHER SHAKEPROOF 6X5/16

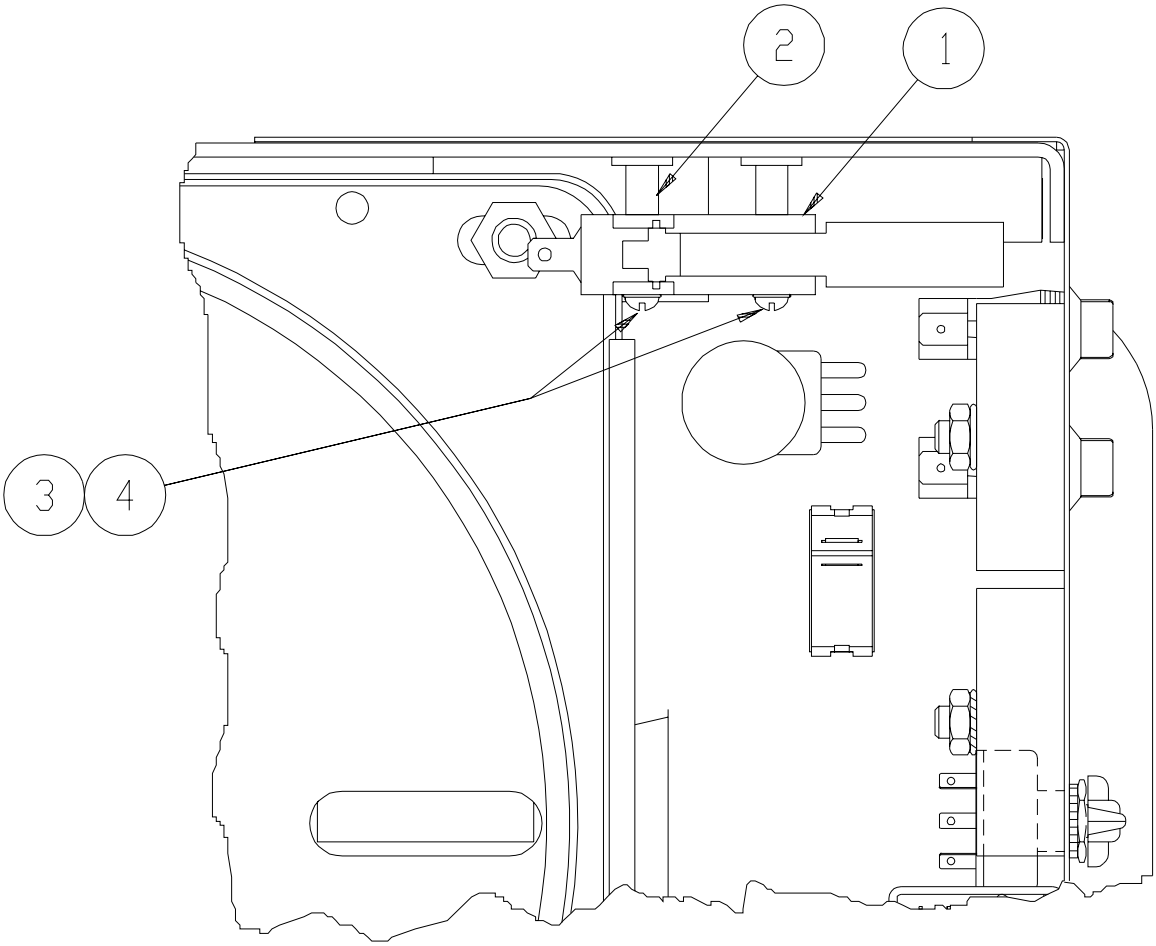

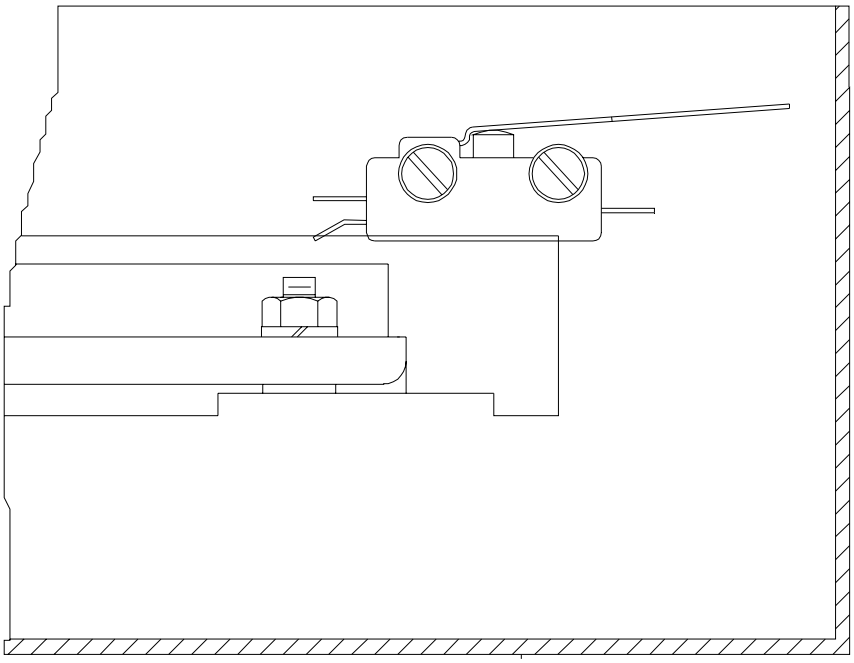

ITEM	STOELTING PN	QTY	DESCRIPTION
1	538297	5	NUT HEX FULL 10-24 ZP
2	295019	2	CONTACTOR MAGNETIC 20 AMP
3	766948	5	WASHER SHAKEPROOF 10 ZINC

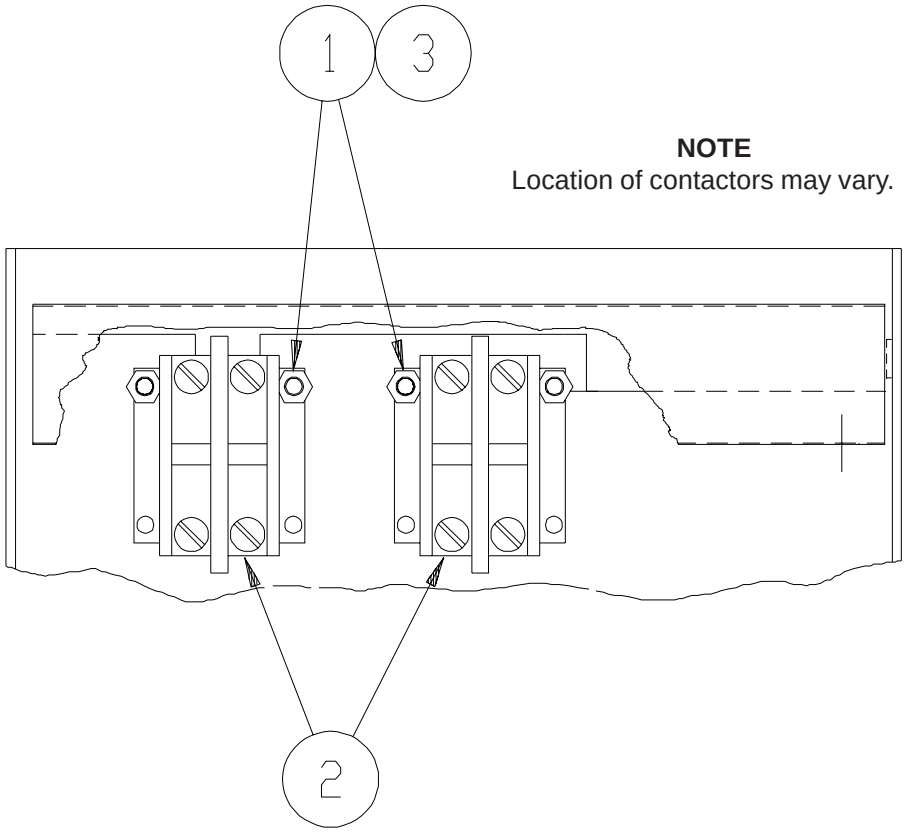

NOTE
Location of contactors may vary.

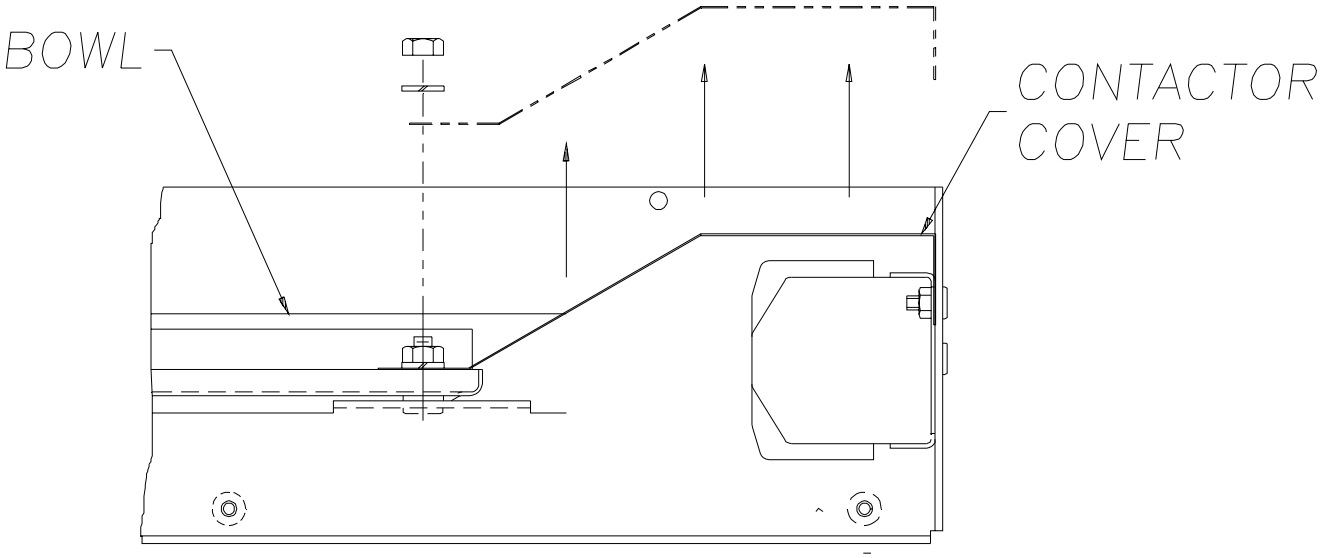

S100
S500/S502+

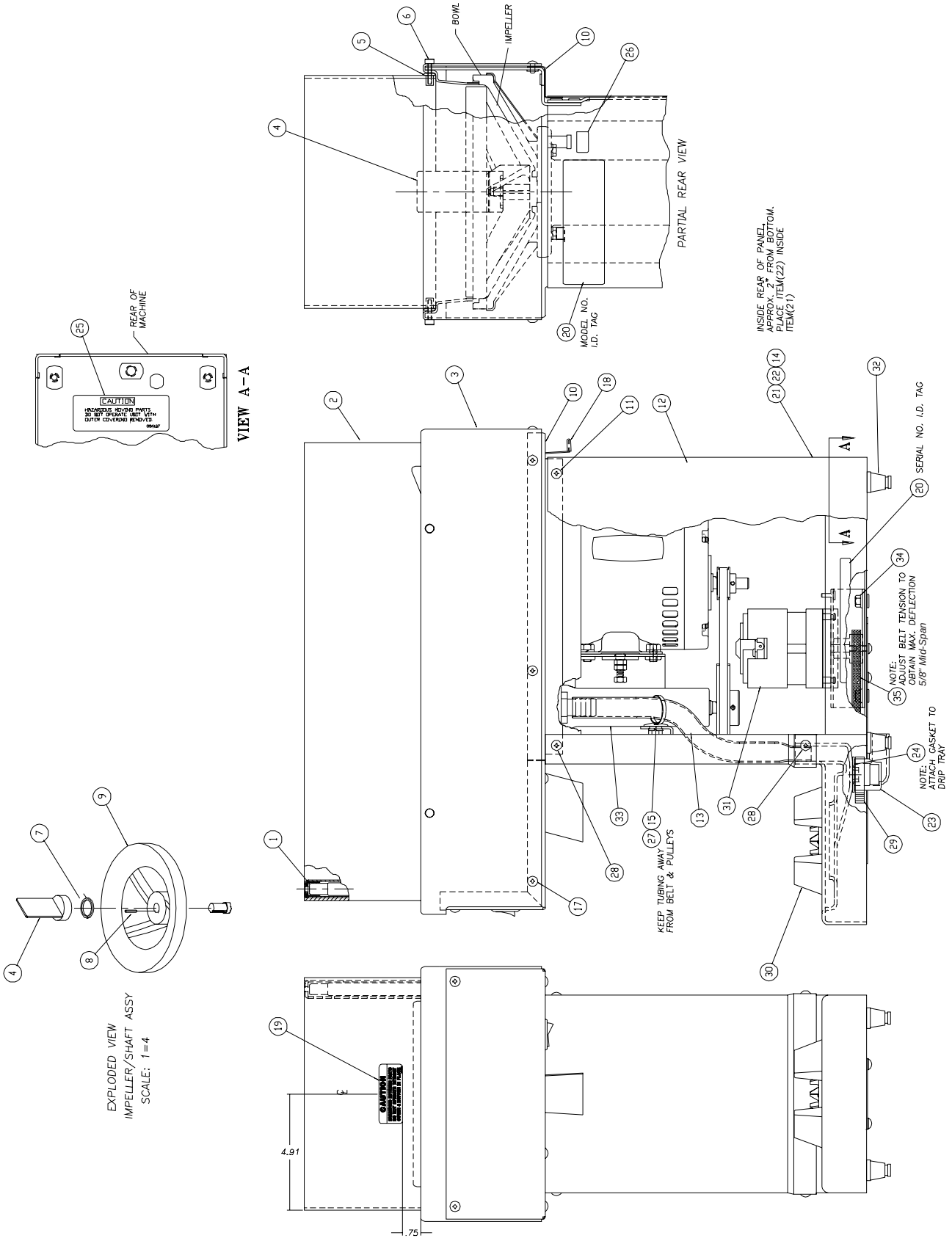

ITEM	STOELTING PN	QTY	DESCRIPTION
1	1172689	1	PLUNGER EXTENSION
2	453006	1	HOUSING, HOPPER, FORMED
3	462010	1	INLET, ICE CHUTE
4	2172683	1	AGITATOR
5	539470	4	NUT, WELL #6-32 BLIND FASTENER
6	653007	4	SCREW, THUMB #6-32 PLAS/SS
7	624677	1	RING O 1-1/8X1-3/8X1/8 70 DURO
8	1172662	1	KEY, IMPELLER/DRIVE SHAFT
9	4172673	1	IMPELLER, MACHINED
10	4177044	1	PANEL, TRANSITION
11	647691	2	SCREW MACH 10-24 X 3/4 TRS HD
12	4177016	1	PANEL, BACK & SIDES
13	756199	11.0"	TUBING, PLASTIC 3/4 ID X 7/8 OD
14	324566	1	DECAL - WIRED ACCORDING TO
15	739016	1	TIE 5-1/2 NATURAL
16	556572	1	PANEL, SPLASH
17	647648	7	SCREW MACH 10-24 X 3/8 TRS HD BLACK
18	232009	1	CAP, PLASTIC .062 X .437 X 1/2 LG
19	324668	1	DECAL, HAZARDOUS ROTATING PARTS
20	.	1	MODEL I.D. PLATE
21	130000	1	BAG,ENVELOPE FRONT LOADING
22	.	1	WIRING DIAGRAM - S100-37A
23	375895	1	FITTING ELBOW 3/4 NPT X 3/4 BARB
24	396242	2	GASKET, DRAIN
25	324107	1	DECAL CAUTION MOVING PARTS
26	324164	1	DECAL DRIVE RESET
27	524091	1	MOUNT ADHESIVE BACK 1X1 PLASTC
28	647676	4	SCREW MACH 10-24 X 3/4 TRS HD BLACK
29	264062	1	CLAMP, PLASTIC, SNAP
30	3177038	1	BLENDER BASE ASSY
31	3172811	1	BLENDER MOTOR ASSY
32	490731	4	LEG, 1" WITH 1/4" STUD
33	4177333	1	BEARING & DRIVE ASSY
34	538335	4	NUT HEX 1/4-20 X 7/16 STL ZP
35	150810	1	BELT, TIMING 5MM 9MMW 167 TOOTH

S505/S510

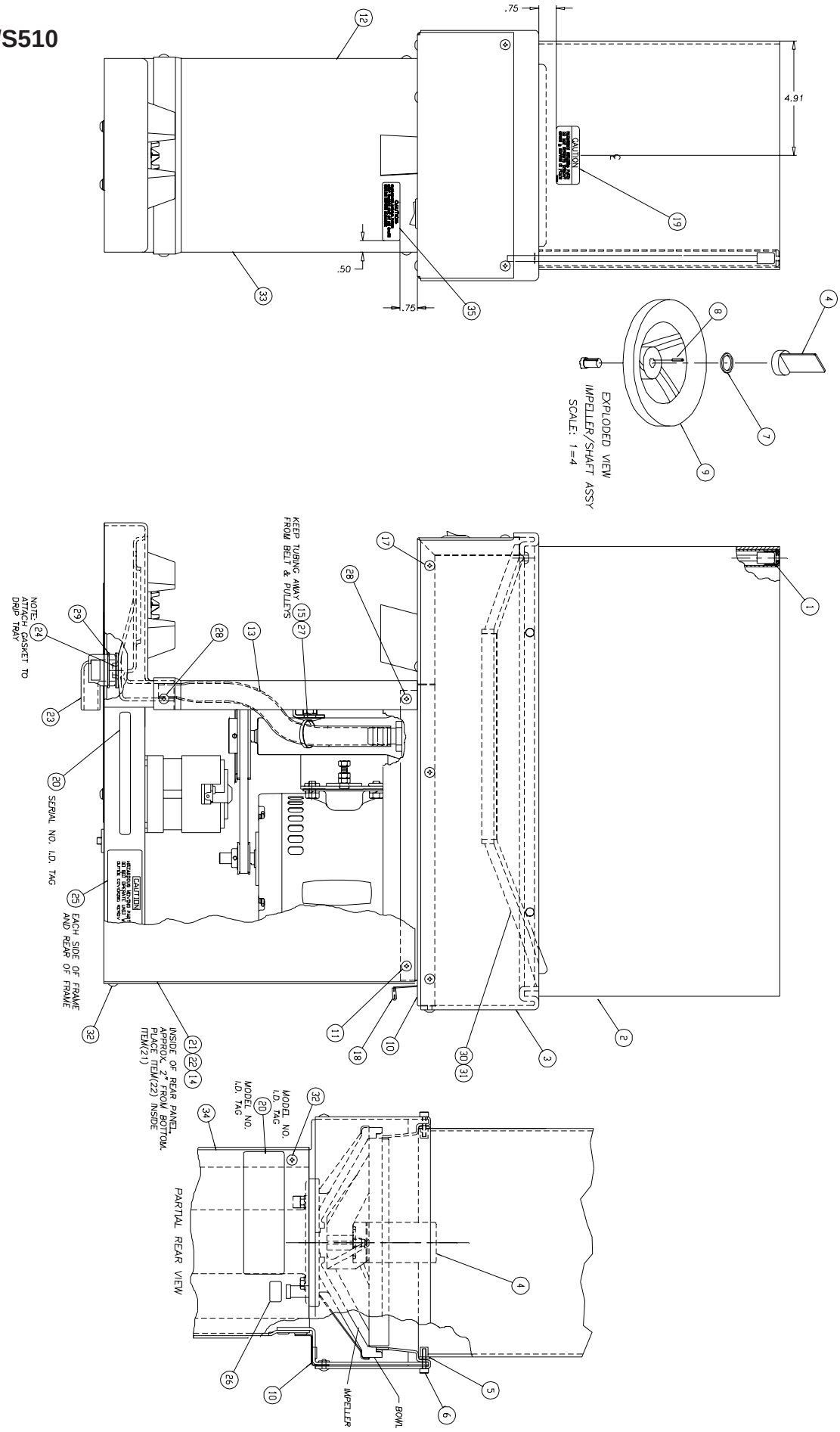
.75
4.91
CAUTION
.50
.75
EXPLODED VIEW
IMPELLER/SHAFT ASSY
SCALE: 1=4
KEEP TUBING AWAY FROM BELT & PULLEYS
NOTE: ATTACH GASKET TO DRIP TRAY
SERIAL NO. I.D. TAG
EACH SIDE OF FRAME AND REAR OF FRAME
INSIDE OF REAR PANEL, APPROX. 2" FROM BOTTOM. PLACE ITEM(21) ITEM(22) INSIDE
MODEL NO. I.D. TAG
MODEL NO. I.D. TAG
PARTIAL REAR VIEW
IMPELLER
BOWL

ITEM	STOELTING PN	QTY	DESCRIPTION
1	2172820	1	PLUNGER EXTENSION
2	453008	1	HOUSING, HOPPER, FORMED
3	462010	1	INLET, ICE CHUTE
4	2172683	1	AGITATOR
5	539470	4	NUT, WELL #6-32 BLIND FASTENER
6	653007	4	SCREW, THUMB #6-32 PLAS/SS
7	624677	1	RING O 1-1/8X1-3/8X1/8 70 DURO
8	1172662	1	KEY, IMPELLER/DRIVE SHAFT
9	4172673	1	IMPELLER, MACHINED
10	4177044	1	PANEL, TRANSITION
11	647691	2	SCREW MACH 10-24 X 3/4 TRS HD
12	3177387	1	PANEL, SIDE, LEFT
13	756199	11.0"	TUBING, PLASTIC 3/4 ID X 7/8 OD
14	324566	1	DECAL - WIRED ACCORDING TO
15	739016	1	TIE 5-1/2 NATURAL
16	556572	1	PANEL, SPLASH
17	647648	7	SCREW MACH 10-24 X 3/8 TRS HD BLACK
18	232009	1	CAP, PLASTIC .062 X .437 X 1/2 LG
19	324668	1	DECAL, HAZARDOUS ROTATING PARTS
20	.	1	MODEL I.D. PLATE
21	130000	1	BAG,ENVELOPE FRONT LOADING
22	.	1	WIRING DIAGRAM - S100-37A
23	2177063	1	DRAIN, MACHINED
24	396242	2	GASKET, DRAIN
25	324107	1	DECAL CAUTION MOVING PARTS
26	324164	1	DECAL DRIVE RESET
27	524091	1	MOUNT ADHESIVE BACK 1X1 PLASTC
28	647676	4	SCREW MACH 10-24 X 3/4 TRS HD BLACK
29	625456	1	RING RETAINING 1.375X.050
30	464259	1	INSULATION, CHUTE
31	M820309	.001	SEALANT DOW CORNING ALUMINUM
32	647653	4	SCREW MACH 10-24 X 3/8 TRS HD
33	3177386	1	PANEL, SIDE, RIGHT
34	3177388	1	PANEL, REAR
35	324741	1	DECAL, CAUTION - ICE CHUTE

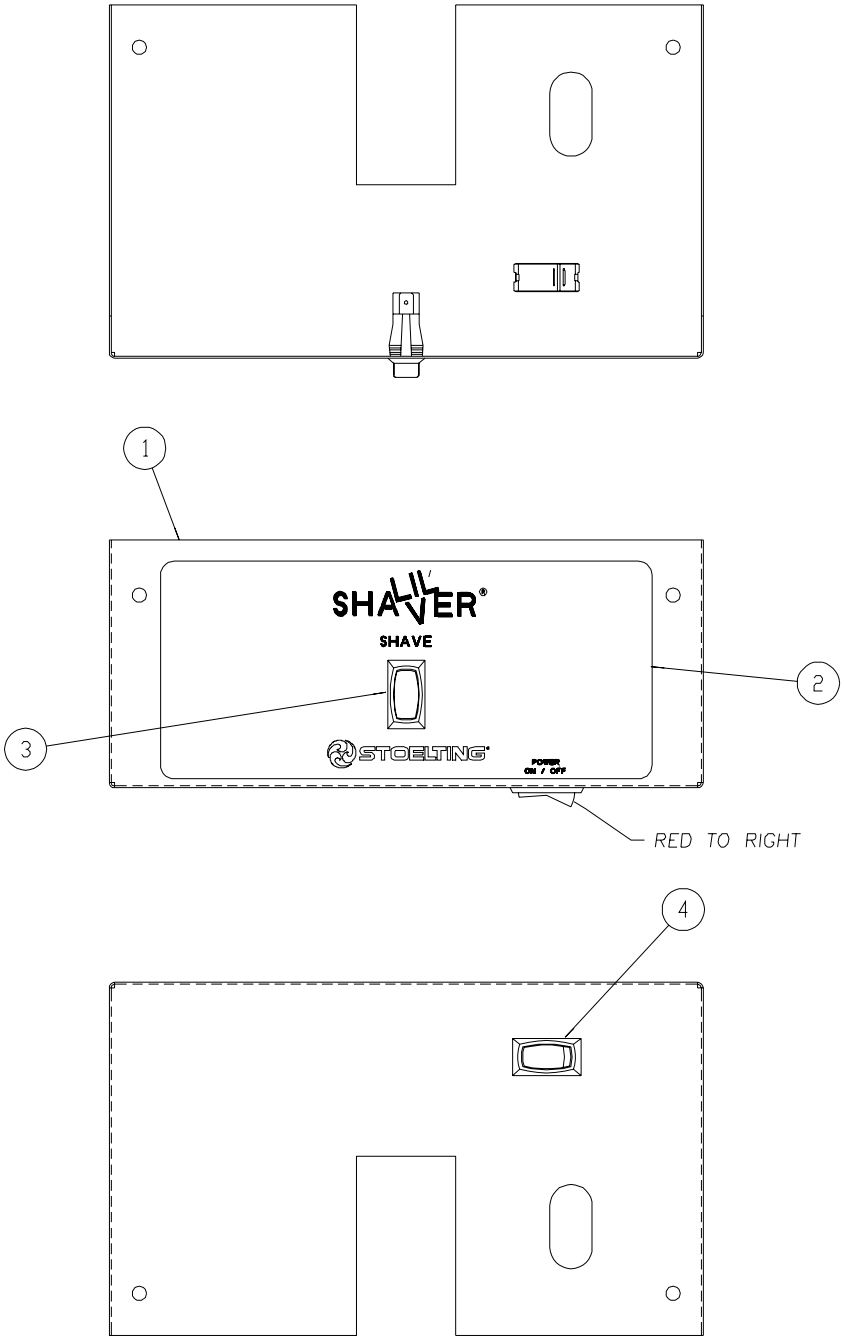

STOELTING PN	QTY	DESCRIPTION
3177048	1	PANEL, SWITCH MOUNTING
324670	1	DECAL, ICE SHAVER
718885	1	SWITCH, ROCKER, SPST, MOMENT, 12A
718883	1	SWITCH, ROCKER, SPST, ON-OFF 16A

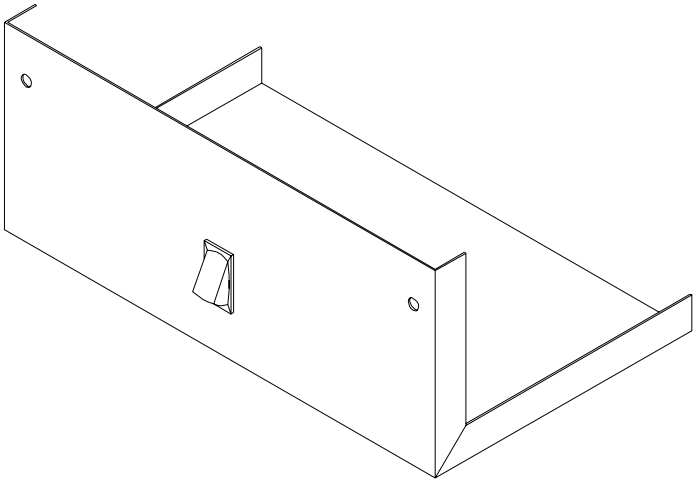

FRONT VIEW
SWITCH ORIENTATION

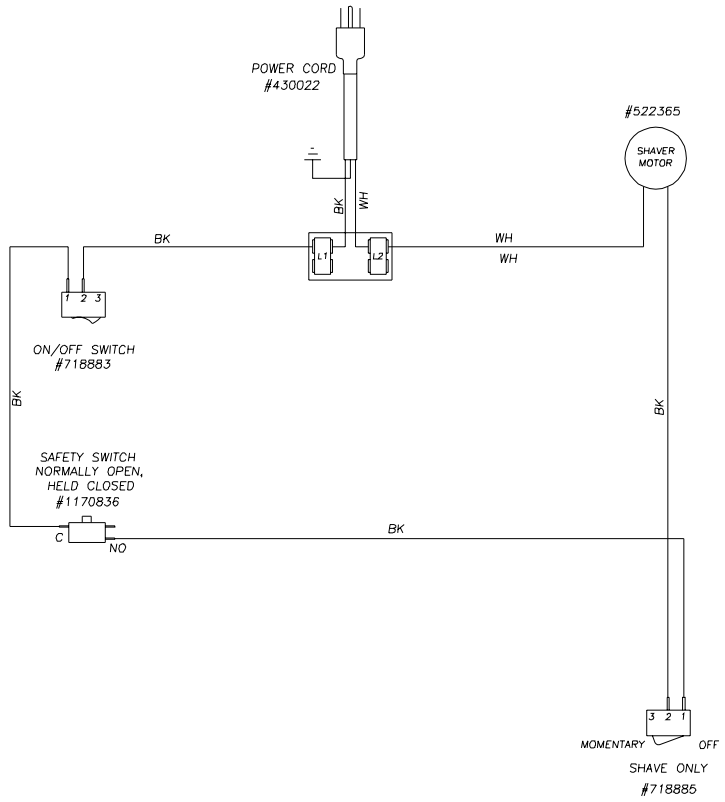

SHAVER LADDER DIAGRAM

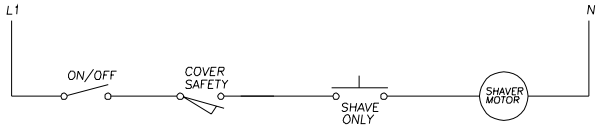

STOELTING
KIEL, WISCONSIN U.S.A. 53042

ELECTRICAL WIRING DIAGRAM
MODEL NO. : S200-37
DIAGRAM NO. : 4172913-WD
REVISION NUMBER: 0

CAUTION

DISCONNECT POWER
SUPPLY BEFORE
SERVICING

4172913-WD

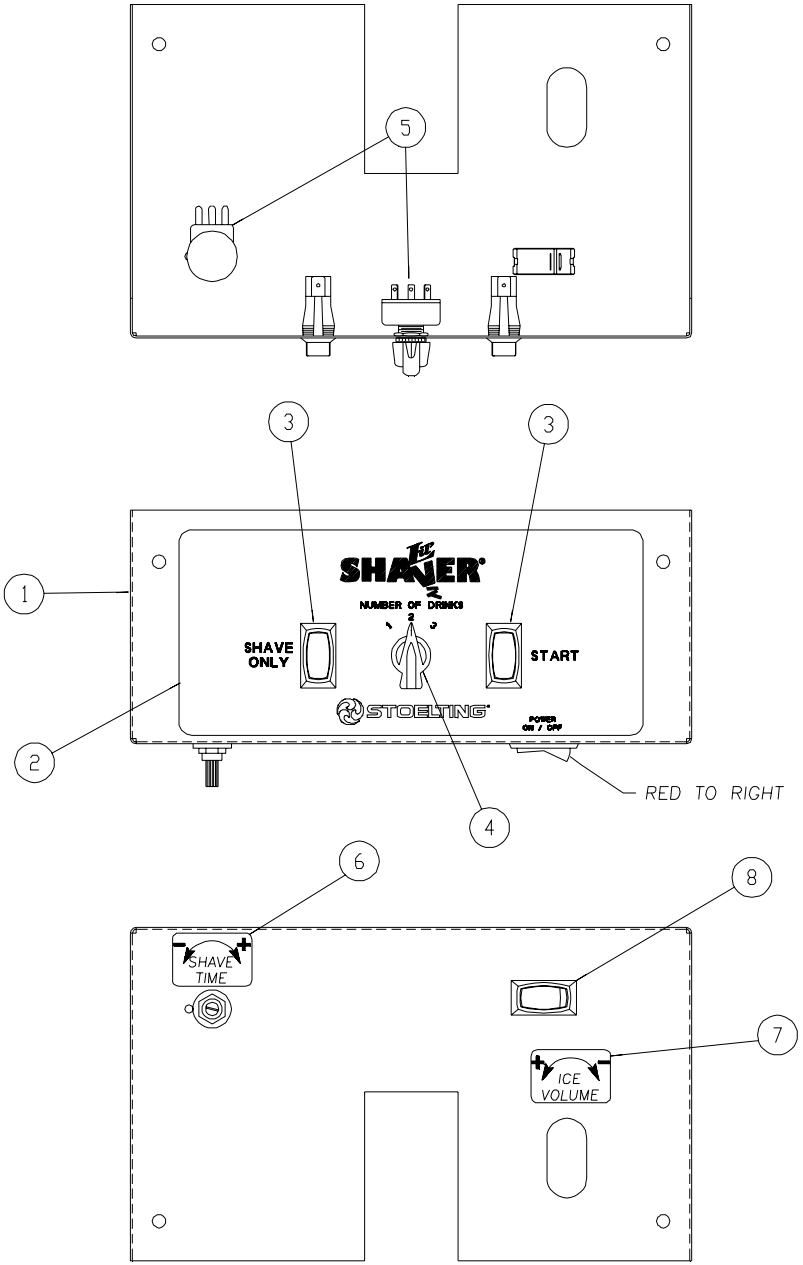

ITEM	STOELTING PN	QTY	DESCRIPTION
1	3177102	1	PANEL, FRONT SWITCH
2	324669	1	DECAL, HEADER PANEL (S300)
3	718885	2	SWITCH,ROCKER,SPST,MOMENT,12A
4	482044	1	KNOB, POINTER 1/4" BRASS INSRT
5	430743	1	HARNESS, ROTARY SWITCH W/POTS
6	324673	1	DECAL,SHAV,TIME
7	324674	1	DECAL,ICE VOLUME
8	713883	1	SWITCH, ROCKER, SPST, ON-OFF 16A

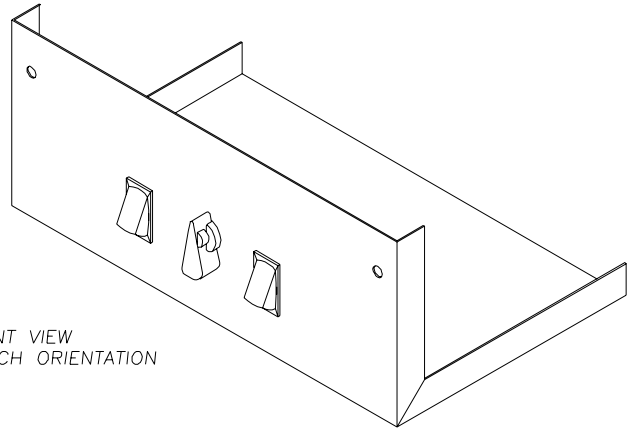

FRONT VIEW
SWITCH ORIENTATION

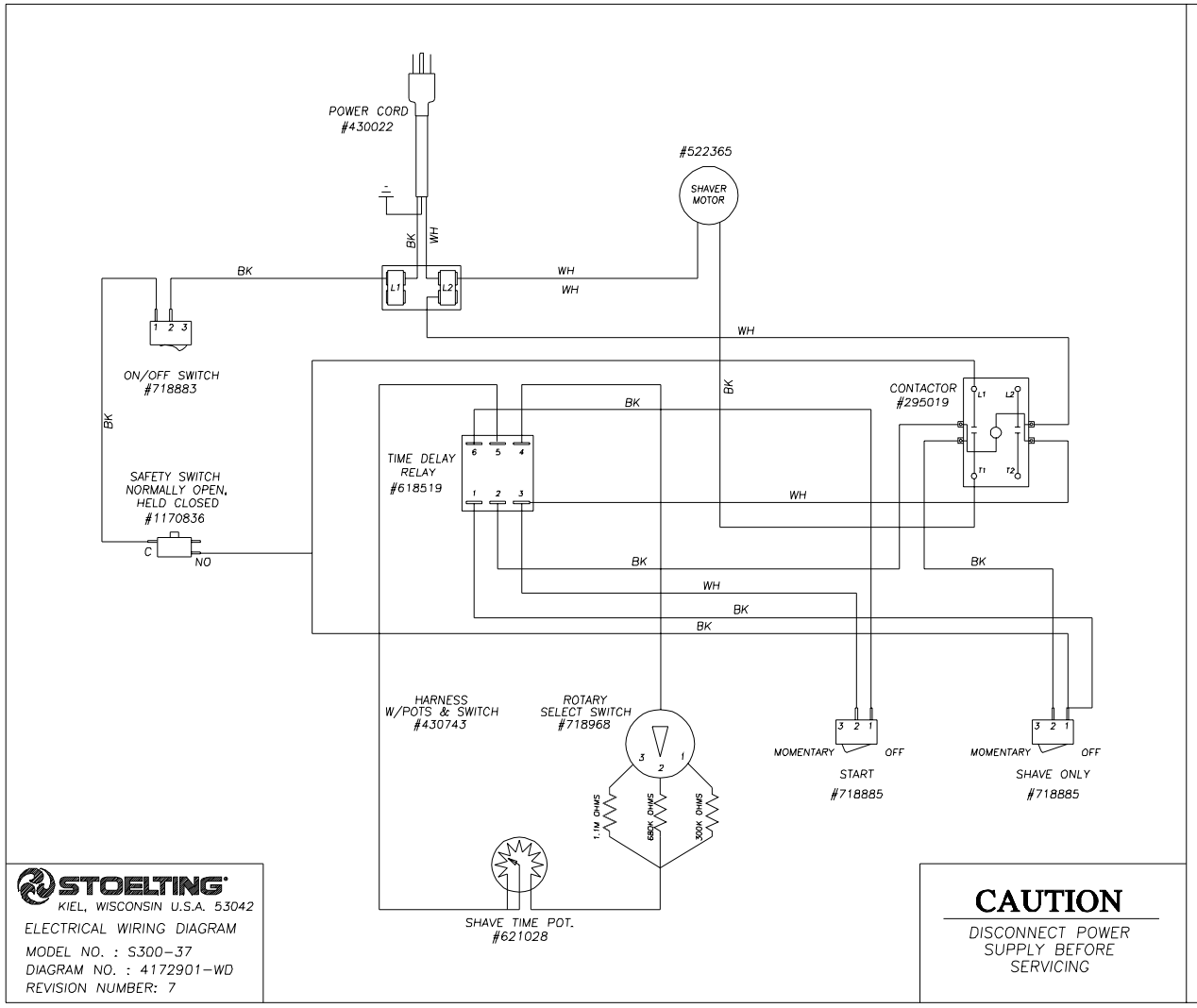

STOELTING
KIEL, WISCONSIN U.S.A. 53042

ELECTRICAL WIRING DIAGRAM
MODEL NO. : S300-37
DIAGRAM NO. : 4172901-WD
REVISION NUMBER: 7

CAUTION

DISCONNECT POWER SUPPLY BEFORE SERVICING

SHAVER LADDER DIAGRAM

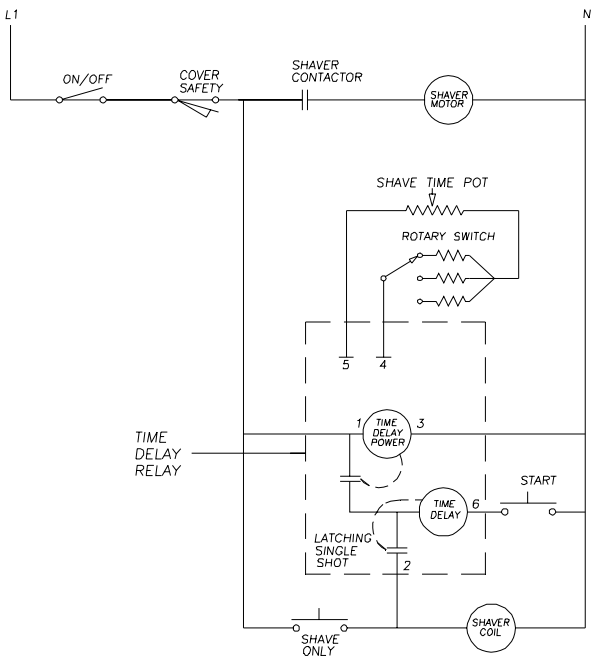

4172901-WD

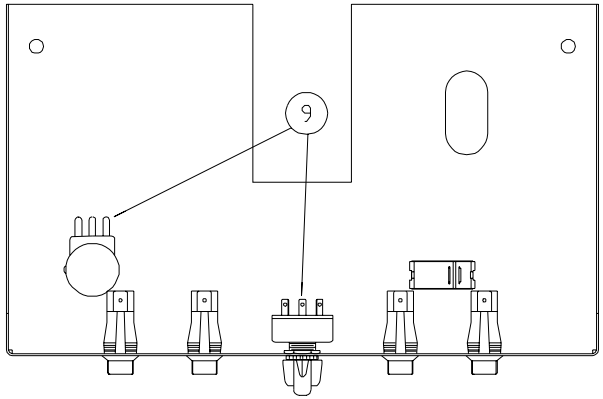

ITEM	STOELTING PN	QTY	DESCRIPTION
1	3177102	1	PANEL, SWITCH MOUNTING
2	324663	1	DECAL, ICE SHAVER
3	718885	2	SWITCH, ROCKER, SPST, MOMENT, 12A
4	718884	1	SWITCH, ROCKER, SPST, 16A @ 125V
5	482044	1	KNOB, POINTER 1/4" BRASS INSRT
6	718883	2	SWITCH, ROCKER, SPST, ON-OFF 16A
7	324673	1	DECAL, SHAVE TIME
8	324674	1	DECAL, ICE VOLUME
9	430743	1	HARNESS, ROTARY SWITCH W/POTS

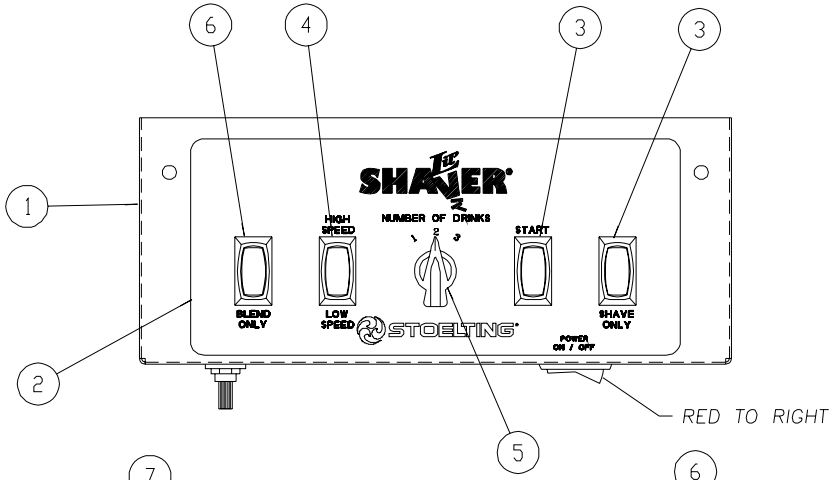

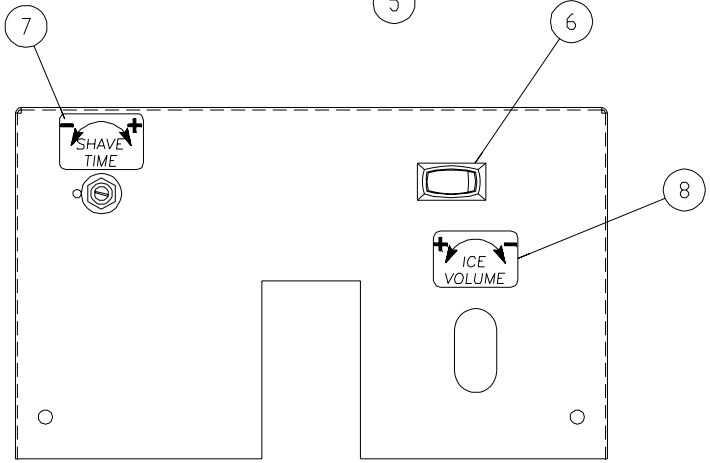

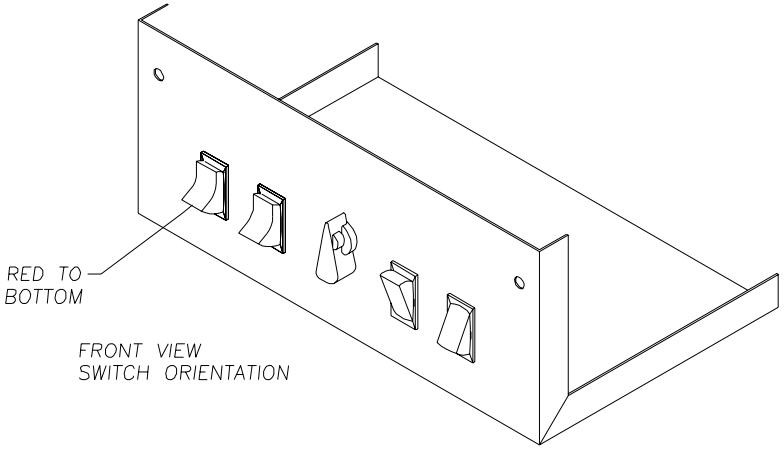

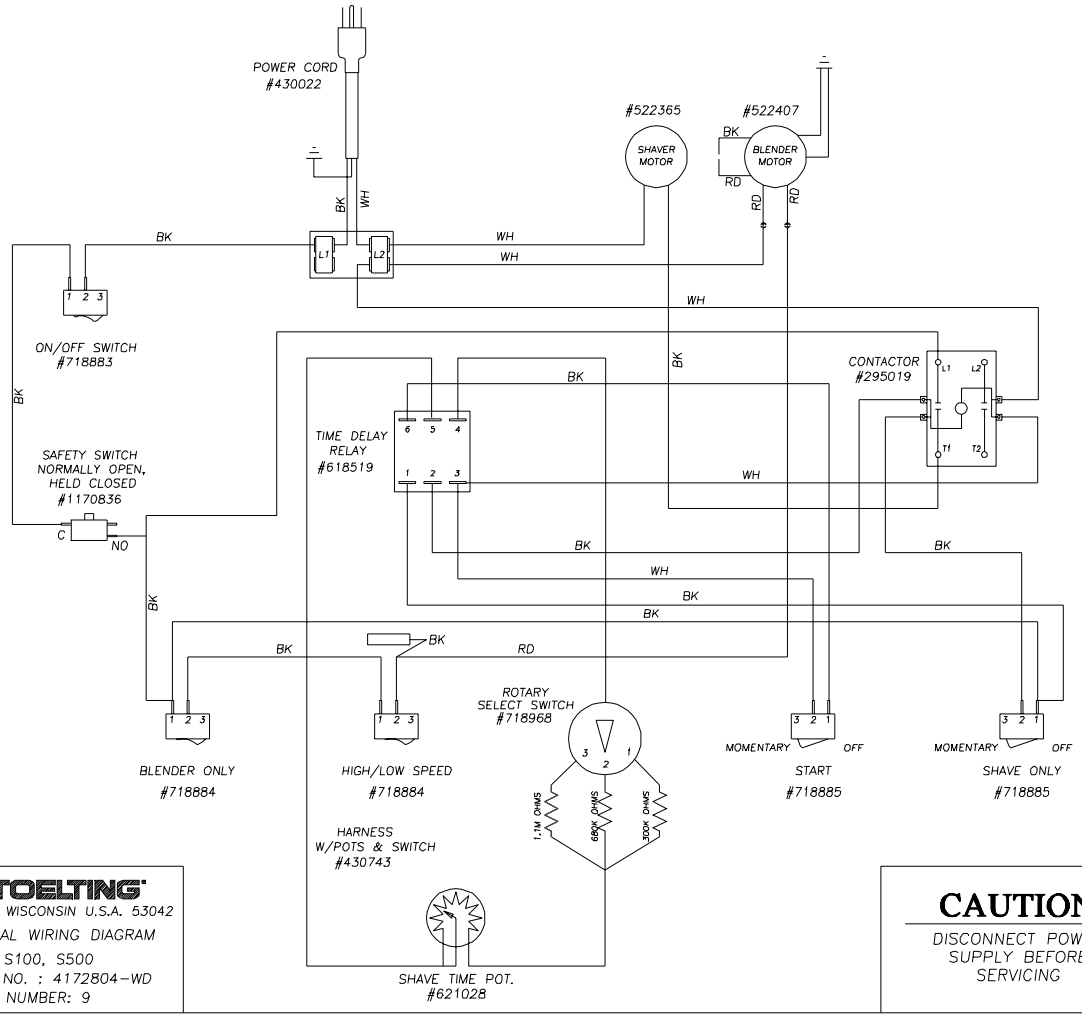

STOELTING
KIEL, WISCONSIN U.S.A. 53042

ELECTRICAL WIRING DIAGRAM
MODELS: S100, S500
DIAGRAM NO. : 4172804-WD
REVISION NUMBER: 9

CAUTION

DISCONNECT POWER SUPPLY BEFORE SERVICING

SHAVER LADDER DIAGRAM

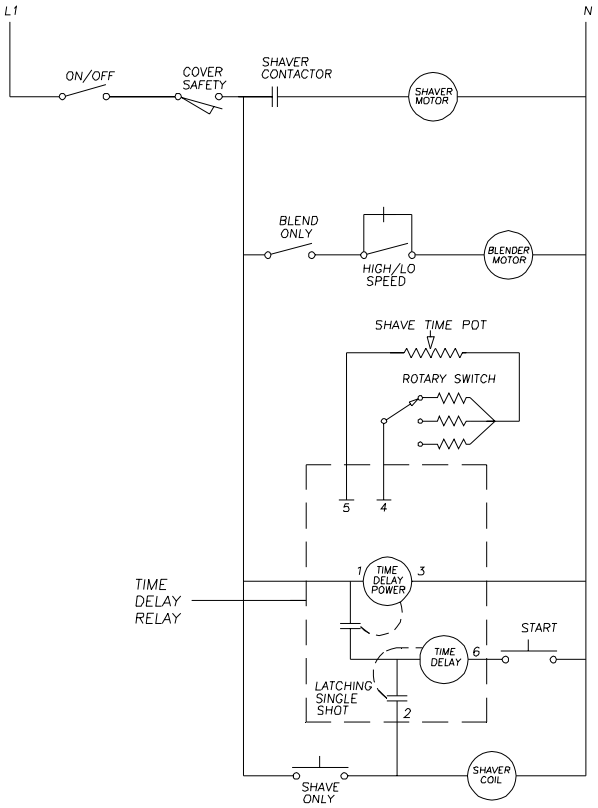

4172804-WD

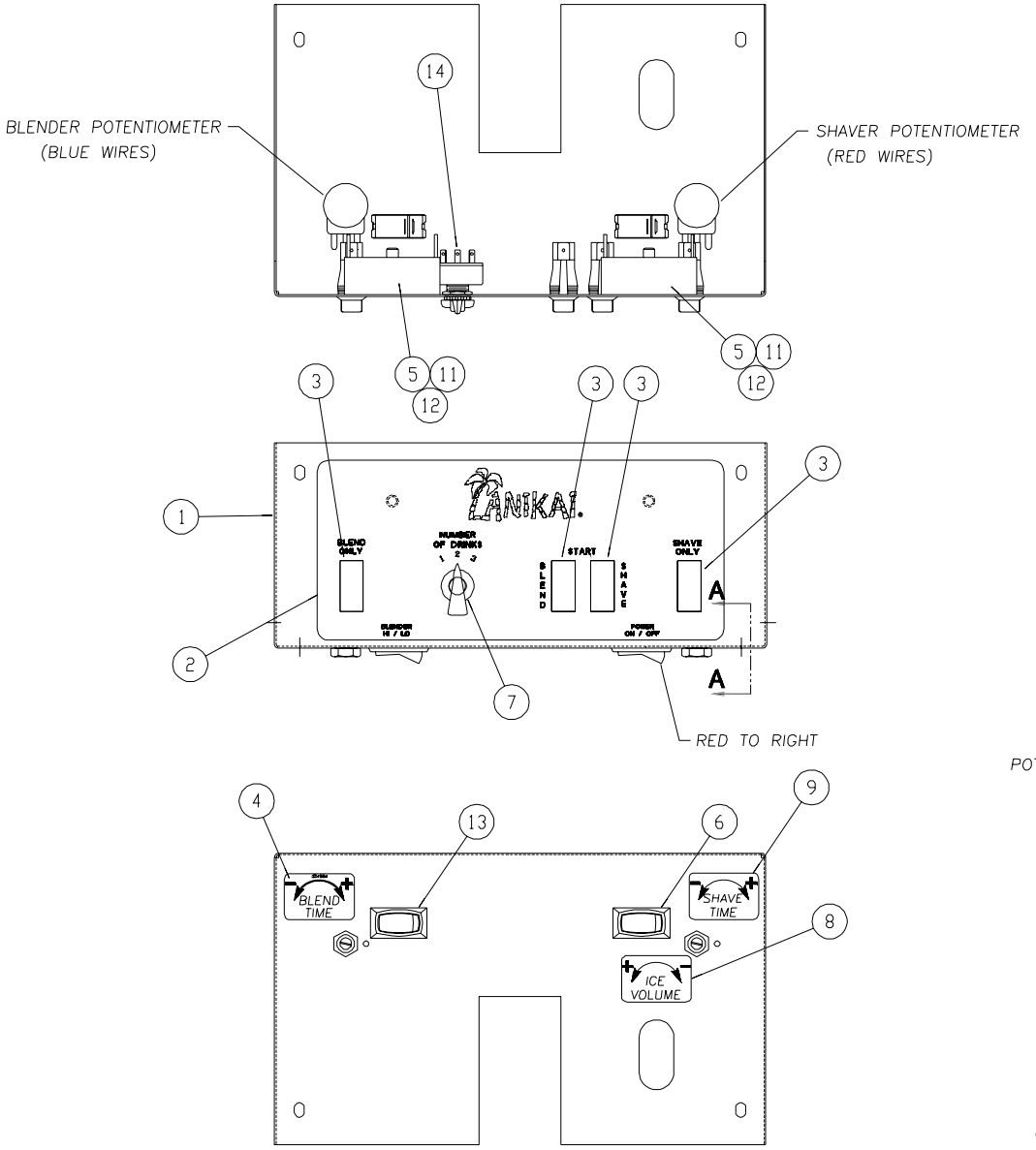

ITEM	STOELTING PN	QTY	DESCRIPTION
1	3172983	1	PANEL, SWITCH MOUNTING
2	324682	1	DECAL, ICE SHAVER LANIKAI
3	718885	4	SWITCH, ROCKER, SPST, MOMENT, 12A
4	324684	1	DECAL, BLEND TIME
5	618519	2	RELAY, TIME DELAY
6	718883	1	SWITCH, ROCKER, SPST, ON-OFF 16A
7	482004	1	KNOB
8	324674	1	DECAL, ICE VOLUME
9	324673	1	DECAL, SHAVE TIME
10			
11	538328	2	NUT HEX FULL 1/4-20 X 7/16 SS
12	766964	2	WASHER SHAKEPROOF 1/4 ZINC
13	718884	1	SWITCH, ROCKER, SPST, 16A @ 125V
14	430747	1	HARNESS, ROTARY SWITCH & POTS
15	2177156	2	SPACER, POTENTIOMETER
16	766982	2	WASHER SHAKEPROOF 3/8 ZINC

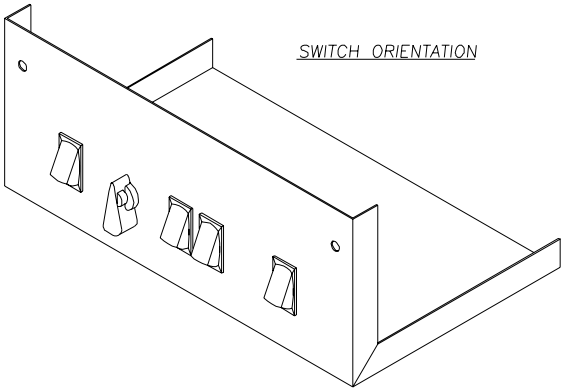

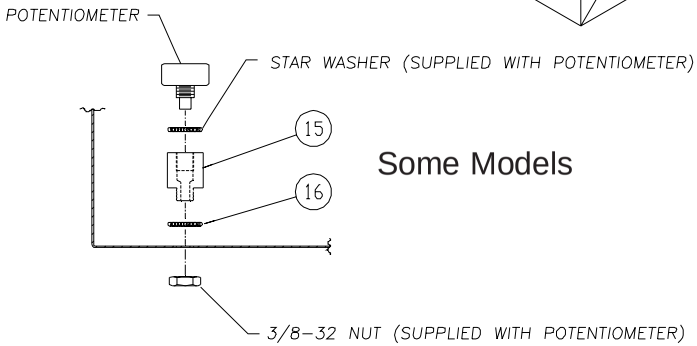

Some Models

SECTION A-A
TYP (2) POTENTIOMETERS

LS500

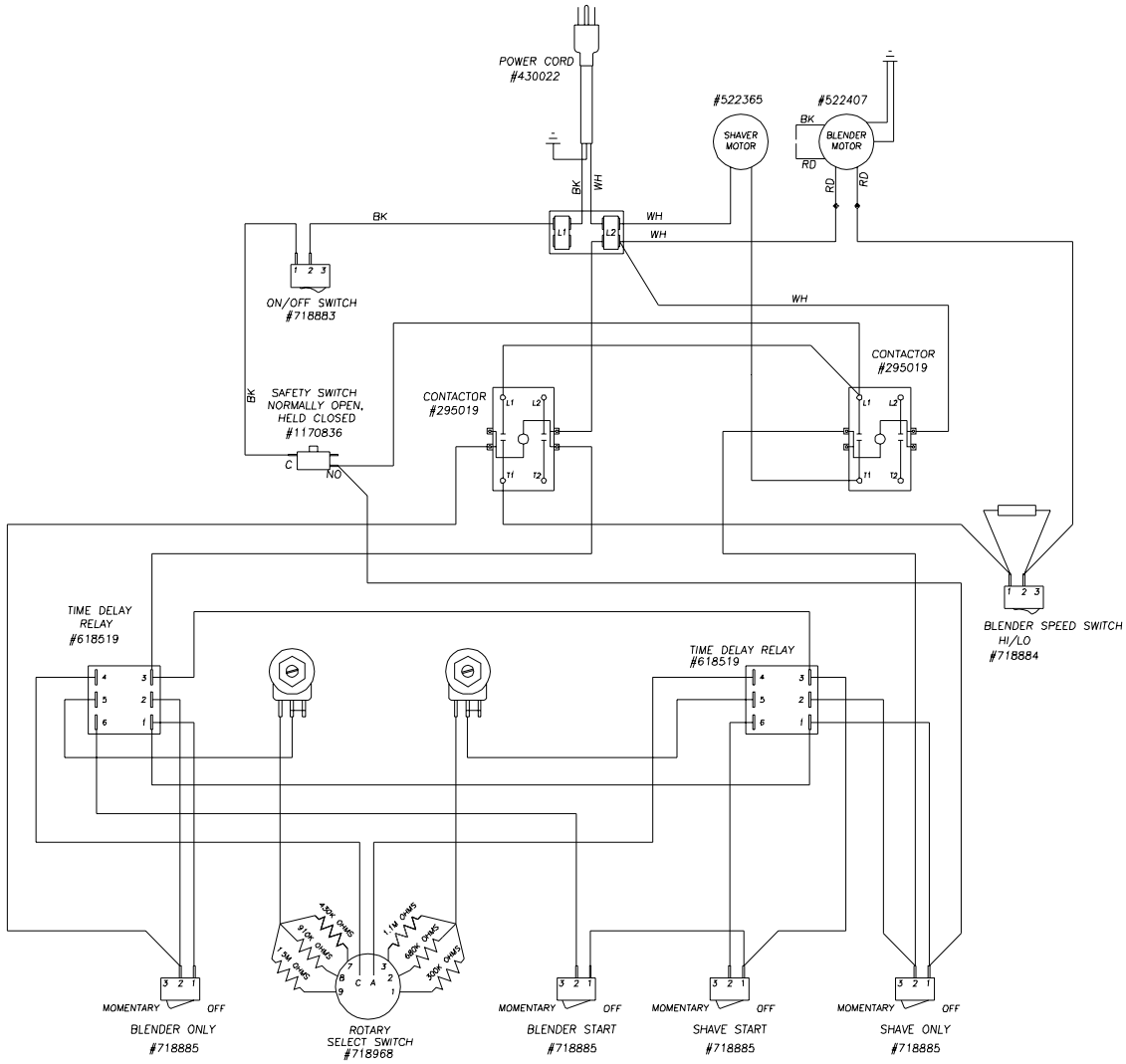

SHAVER LADDER DIAGRAM

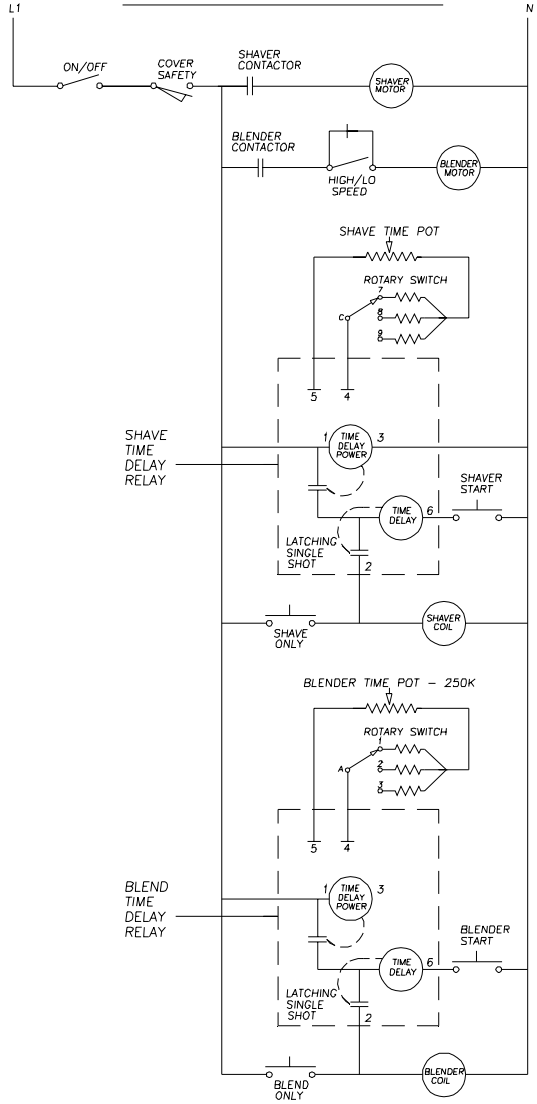

STOELTING
KIEL, WISCONSIN U.S.A. 53042

ELECTRICAL WIRING DIAGRAM
MODELS: LS510
DIAGRAM NO. : 4172981-WD
REVISION NUMBER: 0

CAUTION

DISCONNECT POWER SUPPLY BEFORE SERVICING

4172981-WD

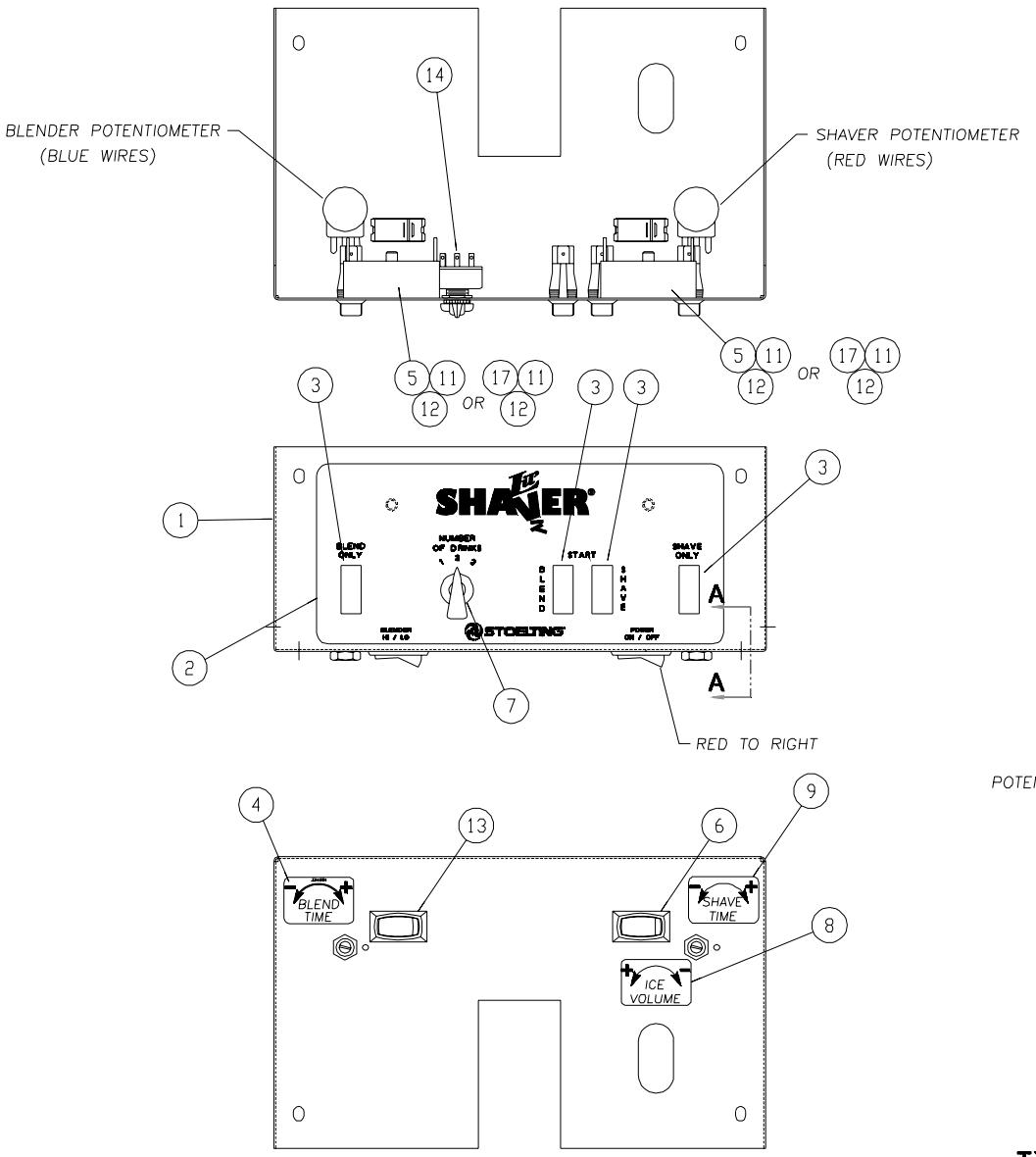

ITEM	STOELTING PN	QTY	DESCRIPTION
1	3172983	1	PANEL, SWITCH MOUNTING
2	324691	1	DECAL, ICE SHAVER
3	718885	4	SWITCH, ROCKER, SPST, MOMENT, 12A
4	324684	1	DECAL, BLEND TIME
5	618519	2	RELAY, TIME DELAY
6	718883	1	SWITCH, ROCKER, SPST, ON-OFF 16A
7	482004	1	KNOB
8	324674	1	DECAL, ICE VOLUME
9	324673	1	DECAL, SHAVE TIME
10			
11	538328	2	NUT HEX FULL 1/4-20 X 7/16 SS
12	766964	2	WASHER SHAKEPROOF 1/4 ZINC
13	718884	1	SWITCH, ROCKER, SPST, 16A @ 125V
14	430747	1	HARNESS, ROTARY SWITCH & POTS
15	2177156	2	SPACER, POTENTIOMETER
16	766982	2	WASHER SHAKEPROOF 3/8 ZINC
17	618533	2	RELAY,T.D. 0.3-10 SEC RANGE 50HZ ONLY

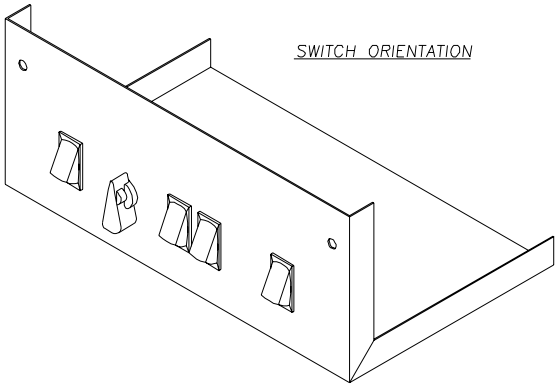

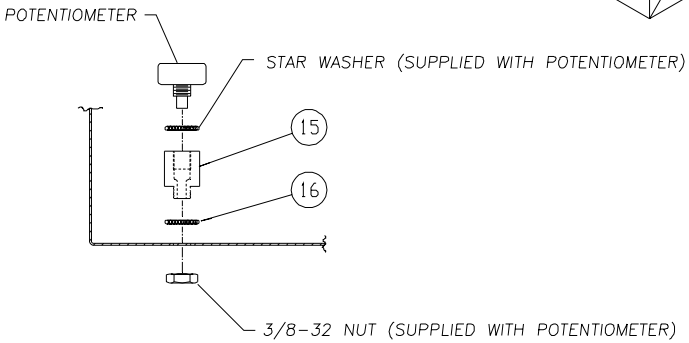

SECTION A-A
TYP (2) POTENTIOMETERS

S502

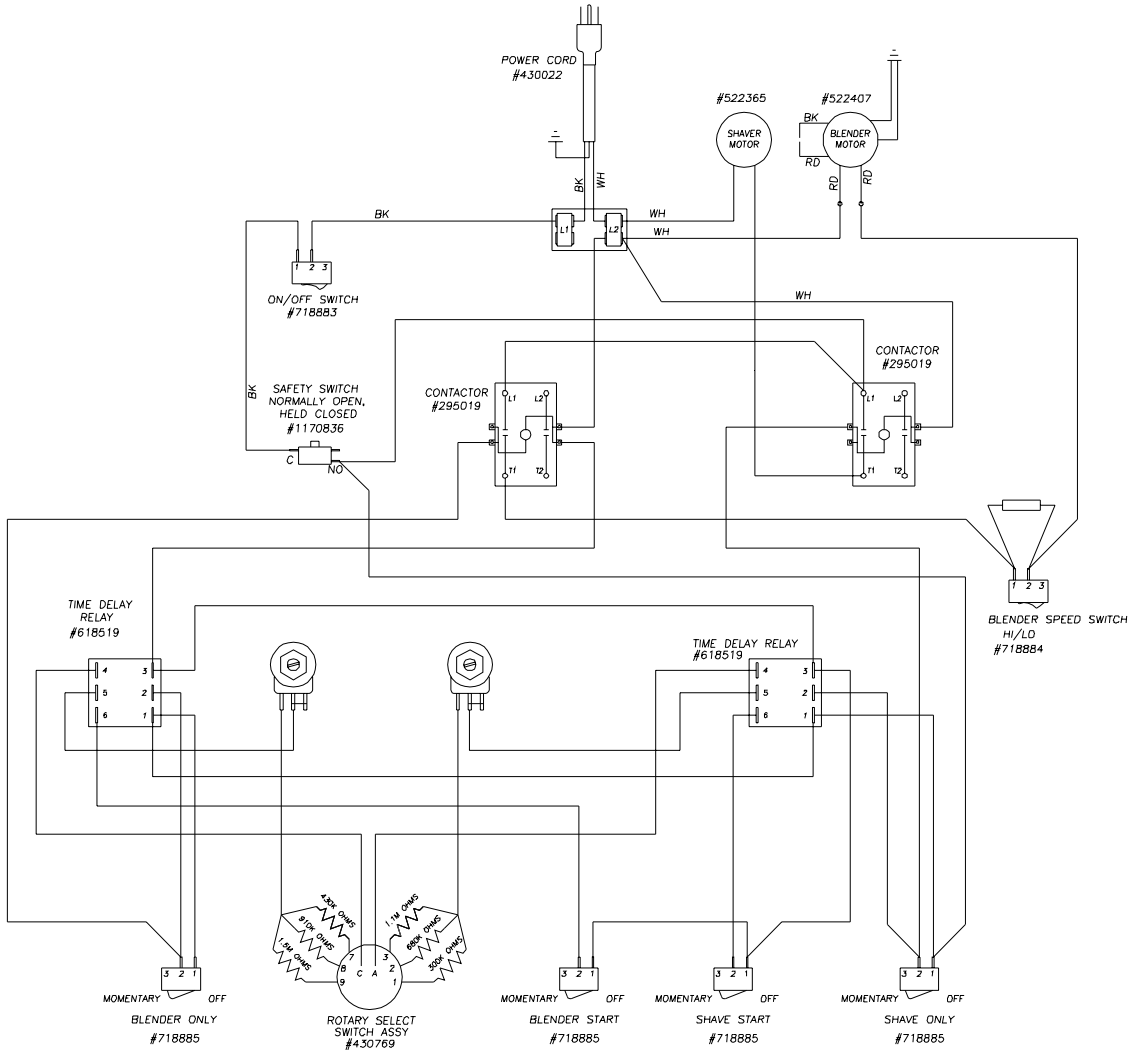

STOELTING
KIEL, WISCONSIN U.S.A. 53042

ELECTRICAL WIRING DIAGRAM
MODELS: S502
DIAGRAM NO. : 4172996-WD
REVISION NUMBER: 0

CAUTION

DISCONNECT POWER
SUPPLY BEFORE
SERVICING

SHAVER LADDER DIAGRAM

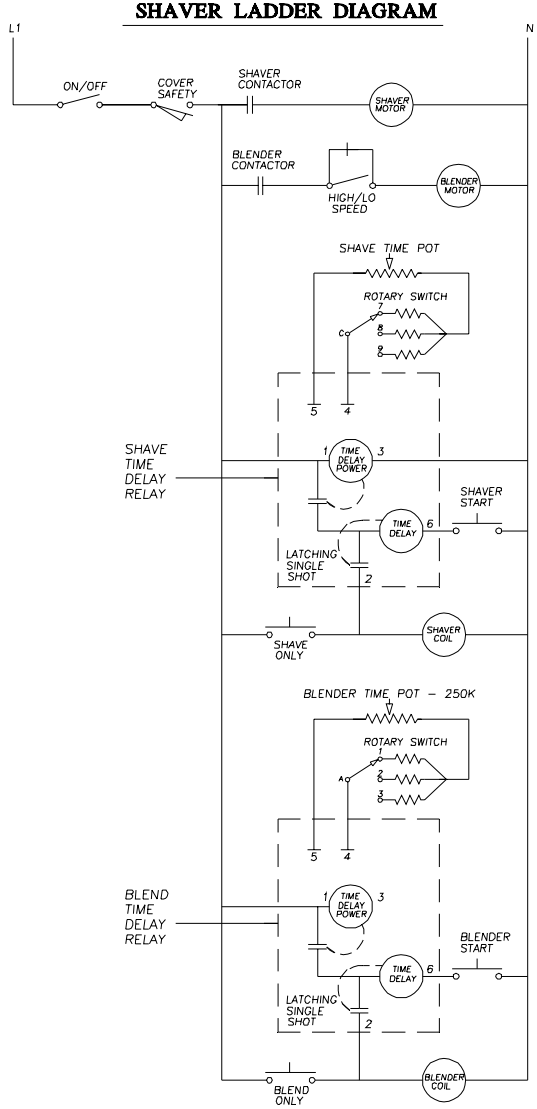

4172996-WD

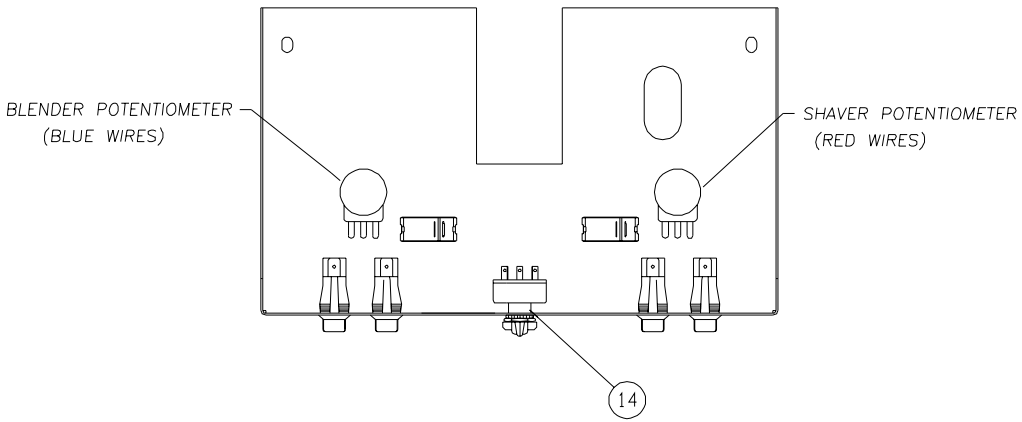

ITEM	STOELTING PN	QTY	DESCRIPTION
1	3177330	1	PANEL, SWITCH MOUNTING
2	324732	1	DECAL, ICE SHAVER
3	718885	4	SWITCH, ROCKER, SPST, MOMENT, 12A
4	324684	1	DECAL, BLEND TIME
5	.	.	.
6	718883	1	SWITCH, ROCKER, SPST, ON-OFF 16A
7	482044	1	KNOB, POINTER 1/4" BRASS INSRT
8	324674	1	DECAL, ICE VOLUME
9	324673	1	DECAL, SHAVE TIME
10	.	.	.
11	.	.	.
12	.	.	.
13	718884	1	SWITCH, ROCKER, SPST, 16A @ 125V
14	430840	1	HARNESS, ROTARY SWITCH & POTS
15	2177156	2	SPACER, POTENTIOMETER
16	766982	2	WASHER SHAKEPROOF 3/8 ZINC
17	.	.	.
18	.	.	.
19	.	.	.

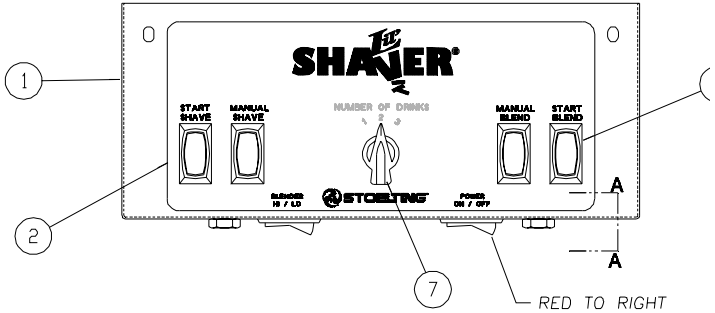

NOTE
See Page 46

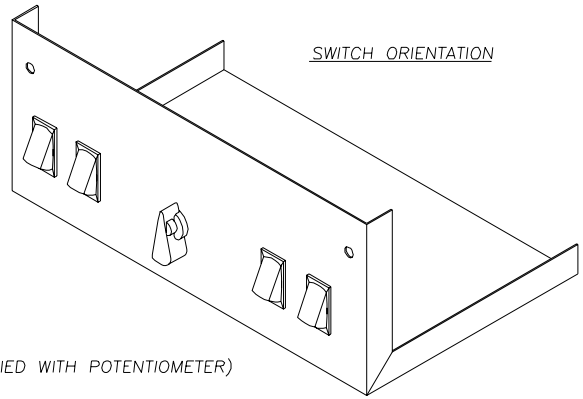

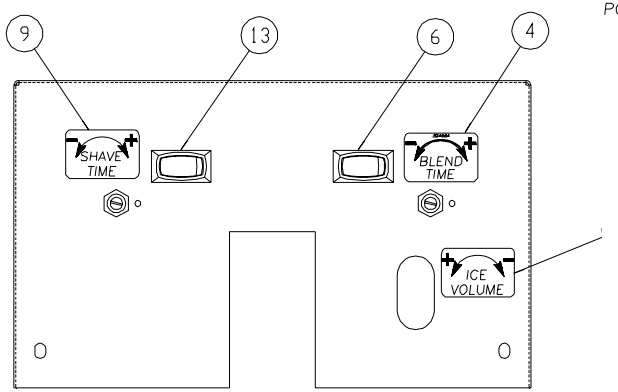

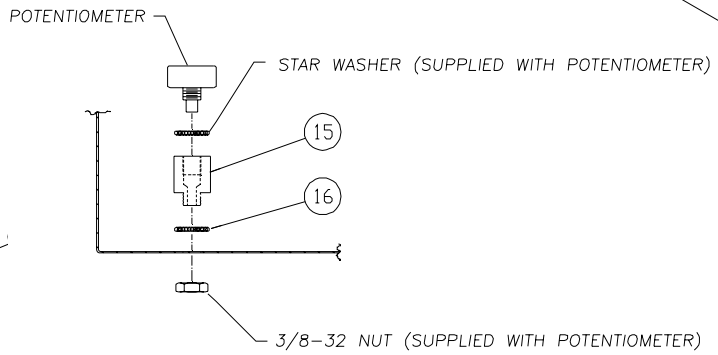

SECTION A-A
TYP (2) POTENTIOMETERS

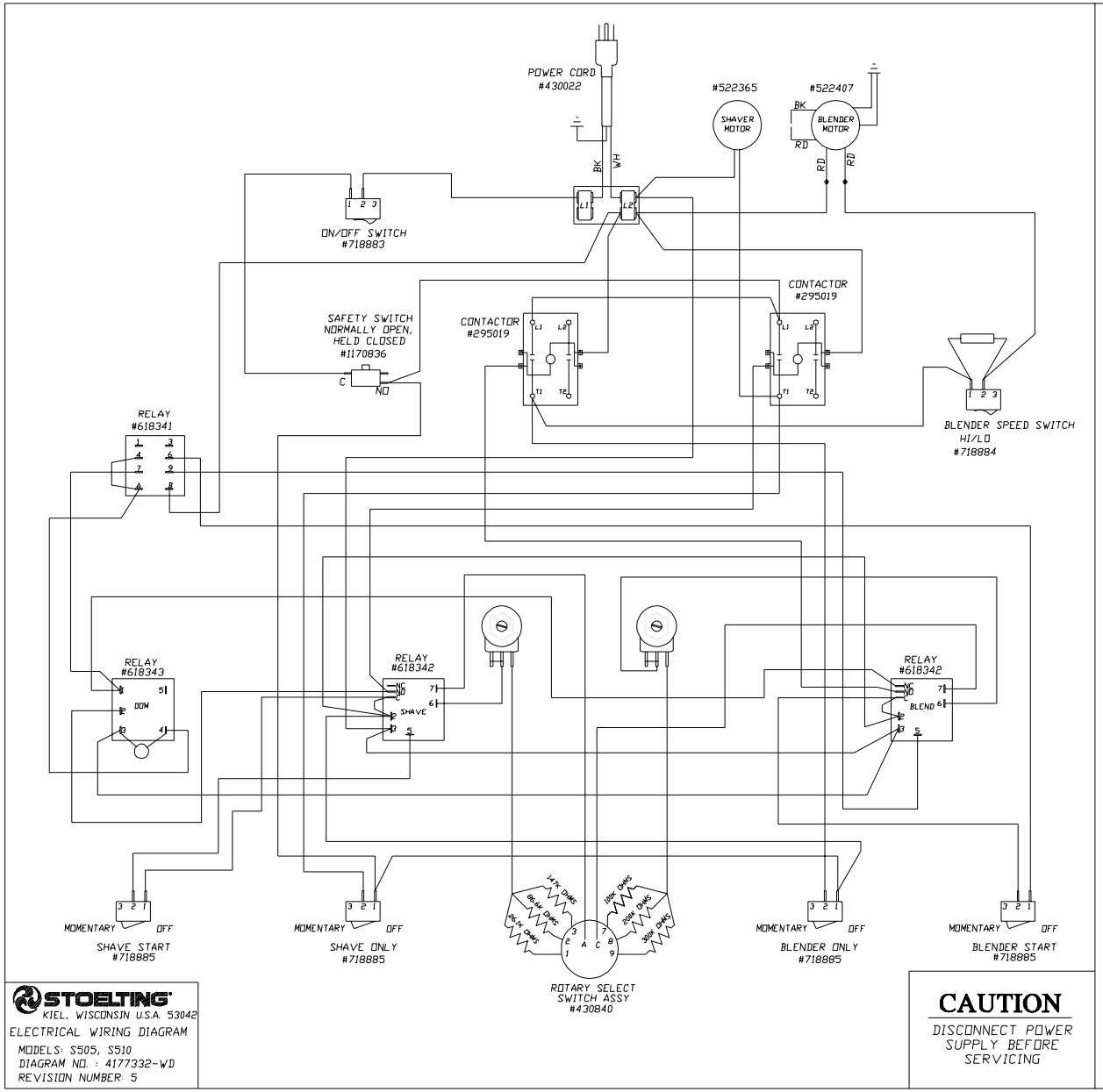

STOELTING
KIEL, WISCONSIN U.S.A. 53042

ELECTRICAL WIRING DIAGRAM

MODELS: S505, S510
DIAGRAM NO. : 4177332-WD
REVISION NUMBER: 5

CAUTION

DISCONNECT POWER SUPPLY BEFORE SERVICING

LADDER DIAGRAM

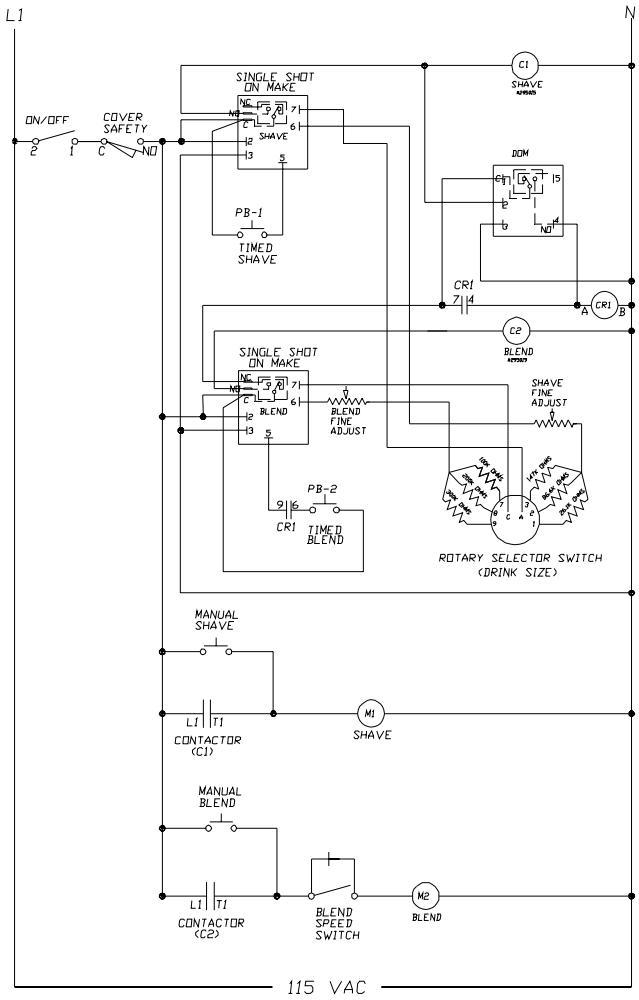

4177332-WD

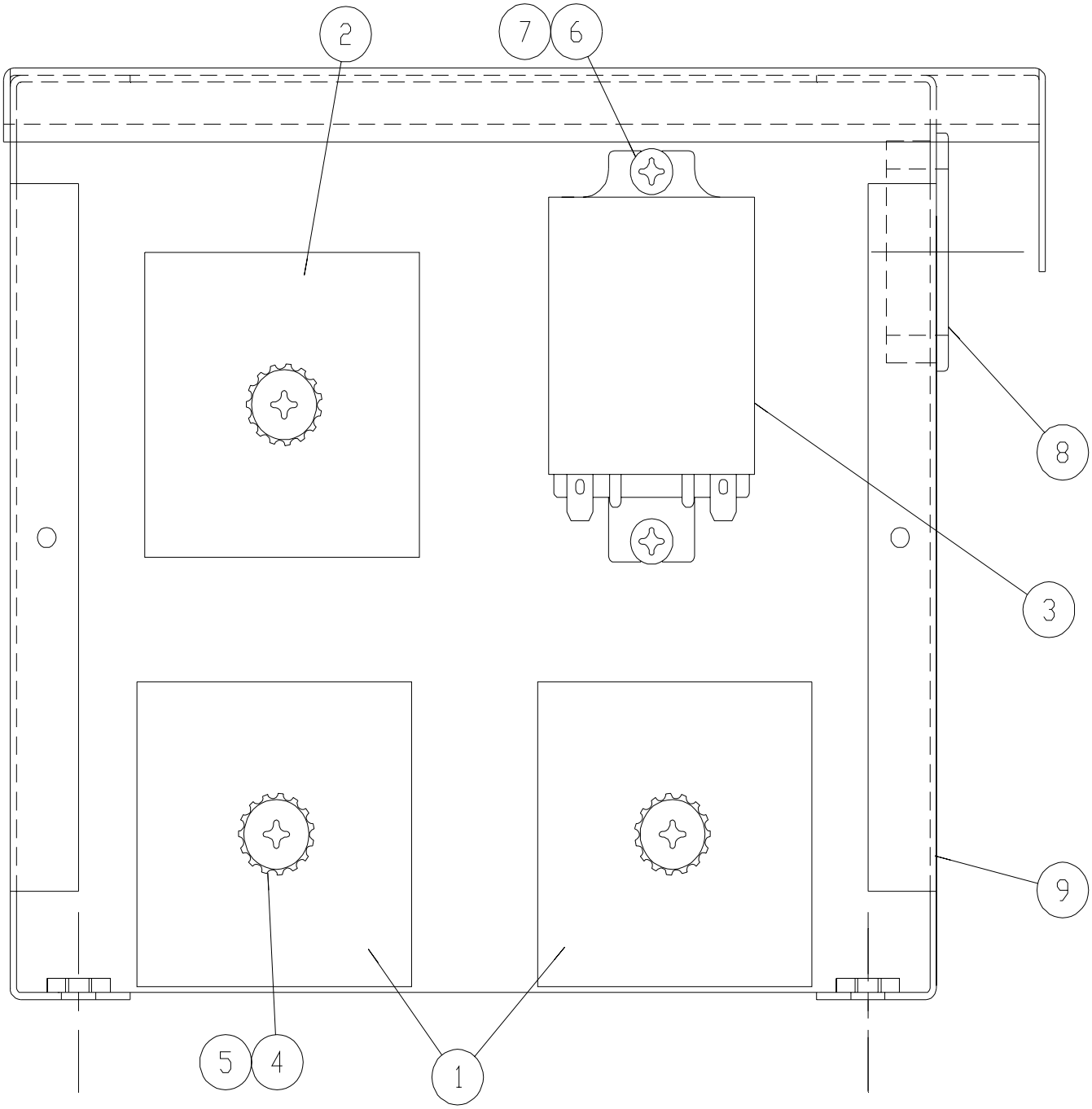

ITEM	STOELTING PN	QTY	DESCRIPTION
1	618342	2	RELAY, 120 VAC 100 SEC SPDT
2	618343	1	RELAY, 120 VAC 2.2 SEC SPST
3	618341	1	RELAY, GENERAL PURPOSE
4	647936	3	SCREW MACH 1/4-20NC X 1-1/4 RD
5	766964	3	WASHER SHAKEPROOF 1/4 ZINC
6	647513	2	SCREW MACH 8-32 X 3/8 RD HD PH
7	766940	2	WASHER SHAKEPROOF 8 ZINC PLATE
8	223016	1	BUSHING SNAP 1.50 MTG HOLE
9	4177411	1	ELECTRICAL BOX WELDMENT