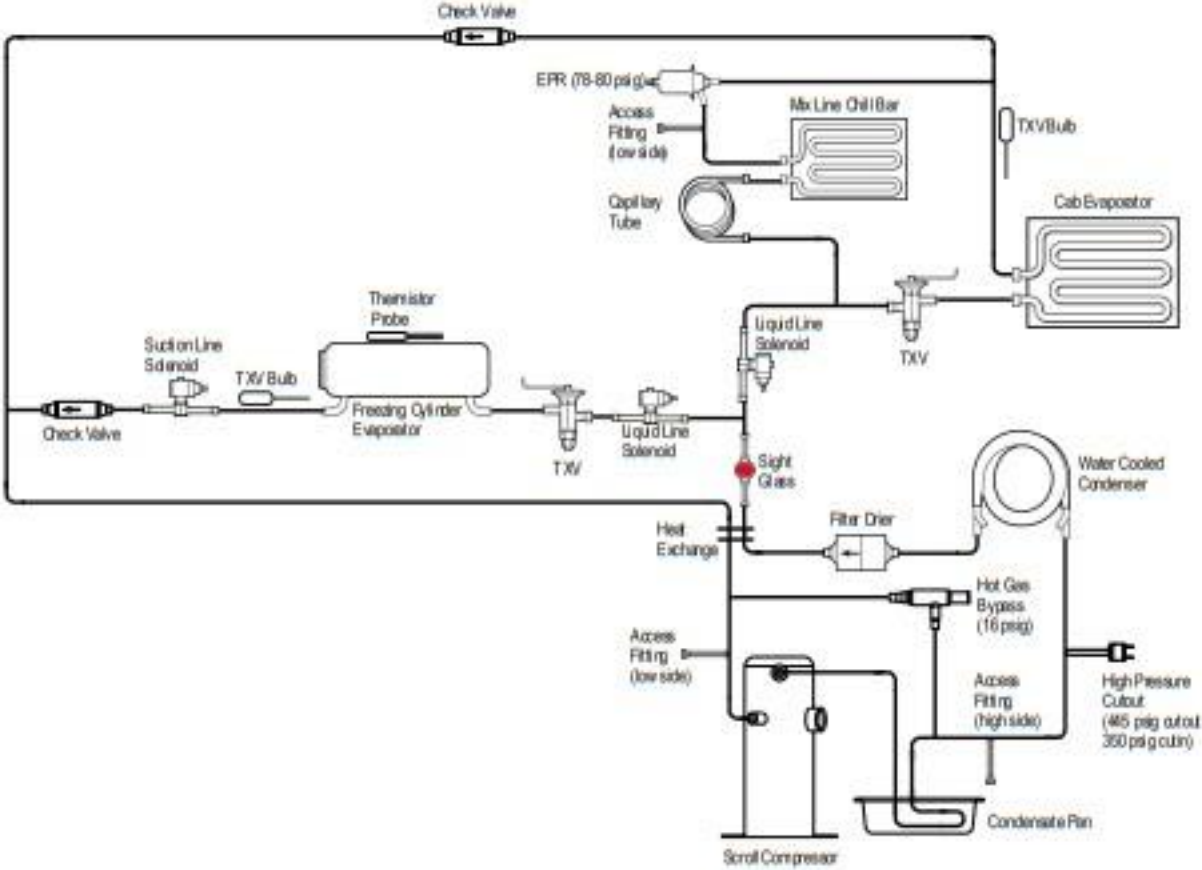
Check Valve
EPR (78-80 psig)
Access Fitting (low side)
Mix Line Chill Bar
TXV Bulb
Capillary Tube
Cab Evaporator
Thermistor Probe
Suction Line Solenoid
TXV Bulb
Freezing Cylinder Evaporator
Check Valve
TXV
Liquid Line Solenoid
Liquid Line Solenoid
TXV
Sight Glass
Water Cooled Condenser
Filter Drier
Heat Exchange
Hot Gas Bypass (16 psig)
Access Fitting (low side)
Access Fitting (high side)
High Pressure Cutout (445 psig cut out 350 psig cutin)
Condensate Pan
Scroll Compressor

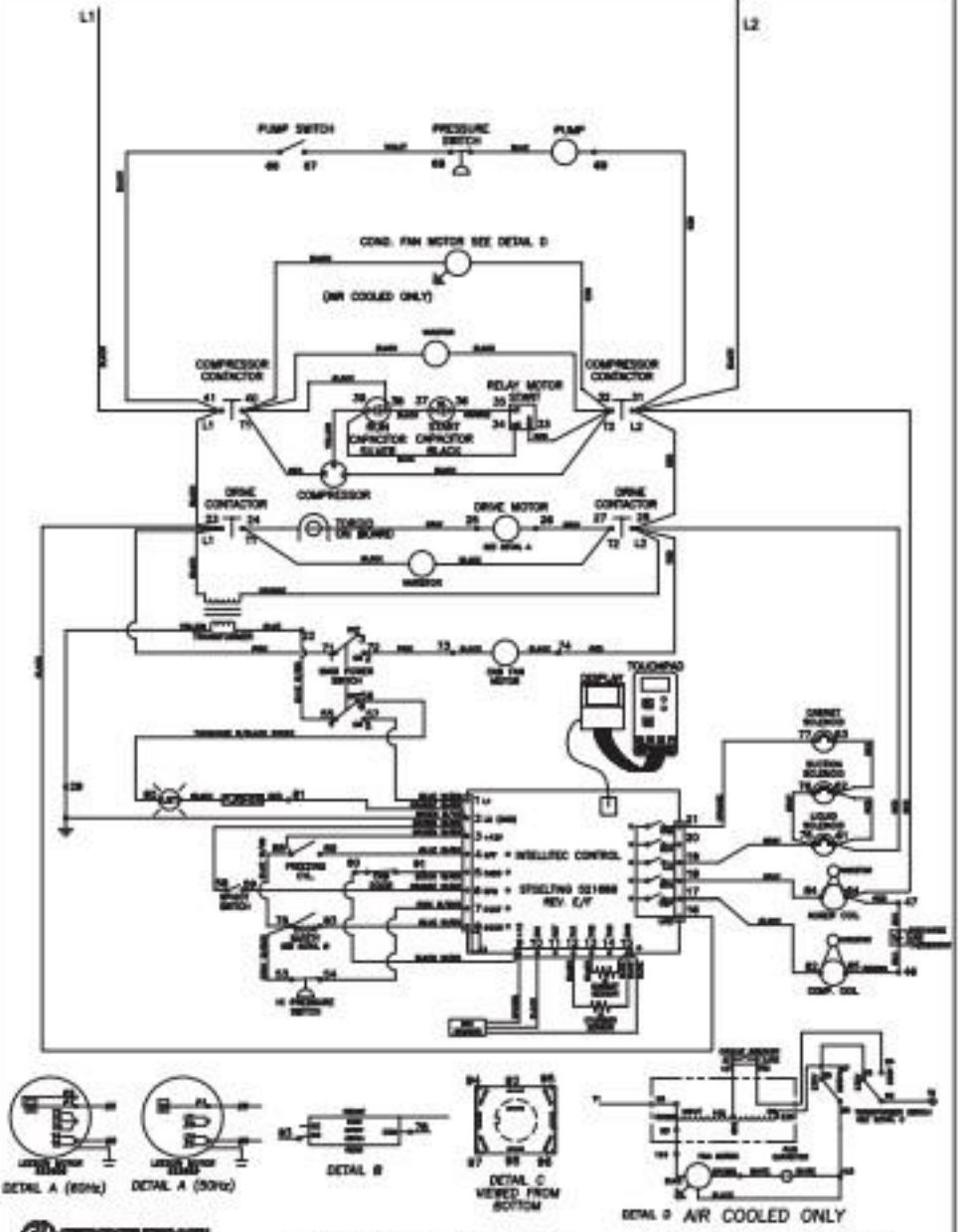
L1
L2
PUMP SWITCH
PRESSURE SWITCH
PUMP
COND. FAN MOTOR SEE DETAIL D
(AIR COOLED ONLY)
COMPRESSOR CONNECTOR
COMPRESSOR CONNECTOR
RELAY MOTOR START
CAPACITOR SILVER
CAPACITOR BLACK
COMPRESSOR
DRIVE CONTACTOR
DRIVE CONTACTOR
DRIVE MOTOR
TORQUE ON BOARD
WATER
TOUCHPAD
DISPLAY
INTELLITEC CONTROL
STERLING 021668
REV. E/F
FREEZING COIL
HIGH PRESSURE SWITCH
CABINET SOLENOID
SUCTION SOLENOID
LIQUID SOLENOID
WATER COIL
COND. COIL
DETAIL A (60Hz)
DETAIL A (50Hz)
DETAIL B
DETAIL C VIEWED FROM BOTTOM
DETAIL D AIR COOLED ONLY
STERLING
A Pentair Water Company
Q44 INTELLITEC WIRING DIAGRAM
DRAWING NO. 2202241-WD