STOELTING®
A VOLLRATH® DIVISION

Model E157A / E257A
OPERATORS MANUAL

Manual No. 513651 Rev.3

This manual provides basic information about the machine. Instructions and suggestions are given covering its operation and care. This manual follows the guidance set forth in the following industry standards: ANSI Z535.6, ASTM F760-93, ASTM F1827-13, FDA Food Code.

The illustrations and specifications in this manual are not binding in detail. We reserve the right to make changes to the machine without notice, and without incurring any obligation to modify or provide new parts for machines built prior to date of change.

DO NOT ATTEMPT to operate the machine until instructions and safety precautions in this manual are read completely and are thoroughly understood. If problems develop or questions arise in connection with installation, operation, or servicing of the machine, contact Stoelting White Glove Service.

For warranty information, visit stoeltingfoodservice.com

STOELTING®
A VOLLRATH® DIVISION

stoeltingfoodservice.com

Stoelting Foodservice Equipment
502 Highway 67
Kiel, WI 53042-1600
U.S.A.

White Glove Service Network
Phone: 888.319.9549

© 2021 Stoelting

A Few Words About Safety

Safety Information

Read and understand the entire manual before operating or maintaining Stoelting equipment.

This manual provides the operator with information for the safe operation and maintenance of Stoelting equipment. As with any machine, there are hazards associated with their operation. For this reason safety is emphasized throughout the manual. To highlight specific safety information, the following safety definitions are provided to assist the reader.

The purpose of safety symbols is to attract your attention to possible dangers. The safety symbols, and their explanations, deserve your careful attention and understanding. The safety warnings do not by themselves eliminate any danger. The instructions or warnings they give are not substitutes for proper accident prevention measures.

If you need to replace a part, use genuine Stoelting parts with the correct part number or an equivalent part. We strongly recommend that you do not use replacement parts of inferior quality.

Safety Alert Symbol:

This symbol Indicates danger, warning or caution. Attention is required in order to avoid serious personal injury. The message that follows the symbol contains important information about safety.

Signal Word:

Signal words are distinctive words used throughout this manual that alert the reader to the existence and relative degree of a hazard.

WARNING

The signal word “WARNING” indicates a potentially hazardous situation, which, if not avoided, may result in death or serious injury.

CAUTION

The signal word “CAUTION” indicates a potentially hazardous situation, which, if not avoided, may result in minor or moderate injury.

NOTICE

The signal word “*NOTICE*” indicates information relating to equipment/property damage. The information is not hazard-related.

NOTE

The signal word “NOTE” indicates additional information relating to the subject, usually a hint or tip, that is not hazard-related and does not involve equipment/property damage.

Table of Contents

Section	Description	Page
Section 1 - Description and Specifications		**1**
1.1	Description	1
1.2	Machine Models	1
1.3	Specifications	2
Section 2 - Installation Instructions		**3**
2.1	Safety Precautions	3
2.2	Shipment and Transit	3
2.3	Machine Installation	3
Section 3 - Initial Set-Up & Installation		**5**
3.1	Operator's Safety Precautions	5
3.2	Operating Controls and Indicators	5
3.3	Emptying the Freezer	6
3.4	Disassembly of Machine Parts	6
3.5	Cleaning Disassembled Parts	8
3.6	Assembling Machine	8
3.7	Sanitizing	9
3.8	Freeze Down and Operation	9
Section 4 - Maintenance and Adjustments		**11**
4.1	Preventative Maintenance	11
4.2	Extended Storage	11
Section 5 - Replacement Parts		**13**
5.1	Decals & Lubrication	13
5.2	Agitator Assembly	14
5.3	Trays & Hopper Cover	15
5.4	Spigot Assemblies	15

Section 1 - Description and Specifications

1.1 DESCRIPTION

The Stoelting E157A and E257A machines are gravity fed. They are equipped with fully automatic controls which provides a uniform product. The machines are designed to operate with almost any type of neutral base or concentrated flavor.

This manual is designed to assist qualified service personnel and operators in the installation, operation and maintenance of the Stoelting E157A and E257A gravity machines.

1.2 MACHINE MODELS

This manual applies to the following machine models:

- E157-37A
- E157X-302A
- E257-37A
- E257X-302A

Figure 1-1 Model E157A (shown on left)
Model E257A (shown on on right)

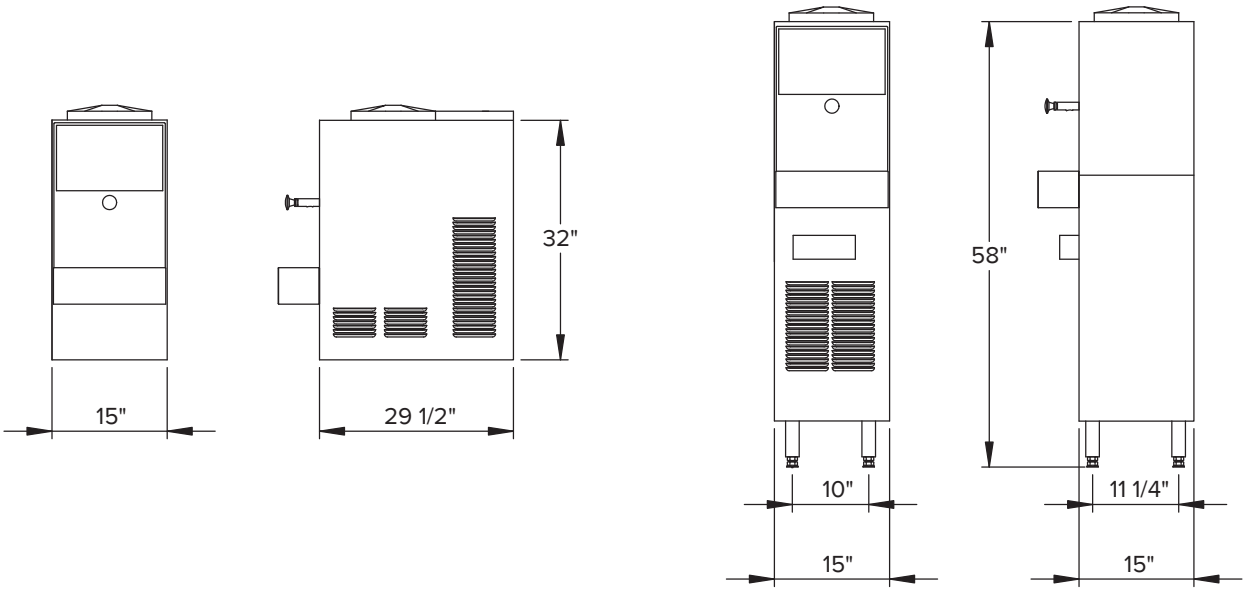

Figure 1-2 Dimensions

1.3 SPECIFICATIONS

	Model E157A		Model E257A	
Dimensions	**Machine**	**with crate**	**Machine**	**with crate**
width	15'' (38,1 cm)	28'' (71,1 cm)	15'' (38,1 cm)	17'' (43,2 cm)
height	32'' (81,3 cm)	40-1/4'' (102,2 cm)	58'' (147,3 cm)	66'' (167,6 cm)
depth	29-1/2'' (74,9 cm)	35-1/2'' (90,2 cm)	15'' (38,1 cm)	21'' (53,3 cm)
Weight	142 lbs (64,4 kg)	200 lbs (90,7 kg)	140 lbs (63,5 kg)	160 lbs (72,5 kg)
Electrical	**1 Phase, 115 VAC, 60Hz**			
running amps	9A			
connection type	NEMA5-15P included			
International Option	1 Phase, 220-240 VAC, 50Hz			
Compressor	2,600 Btu/hr			
Drive Motor	1/12 hp			
Cooling	Air cooled units require 3" (7.6 cm) air space on both sides and 1" (2.5 cm) at the back.		Air cooled units require 6" (15.2 cm) air space at the back and below	
Hopper Volume	10 gallon (37,85 liters)			

Section 2 - Installation Instructions

2.1 SAFETY PRECAUTIONS

Do not attempt to operate the machine until the safety precautions and operating instructions in this manual are read completely and are thoroughly understood.

Take notice of all warning labels on the machine. The labels have been put there to help maintain a safe working environment. The labels have been designed to withstand washing and cleaning. All labels must remain legible for the life of the machine. Labels should be checked periodically to be sure they can be recognized as warning labels.

If danger, warning or caution labels are needed, indicate the part number, type of label, location of label, and quantity required along with your address and mail to:

Stoelting Foodservice Equipment
502 Hwy. 67
Kiel, Wisconsin 53042

2.2 SHIPMENT AND TRANSIT

The machine has been assembled, operated and inspected at the factory. Upon arrival at the final destination, the entire machine must be checked for any damage which may have occurred during transit.

With the method of packaging used, the machine should arrive in excellent condition. THE CARRIER IS RESPONSIBLE FOR ALL DAMAGE IN TRANSIT, WHETHER VISIBLE OR CONCEALED. Do not pay the freight bill until the machine has been checked for damage. Have the carrier note any visible damage on the freight bill. If concealed damage and/or shortage is found later, advise the carrier within 10 days and request inspection. The customer must place claim for damages and/or shortages in shipment with the carrier. Stoelting cannot make any claims against the carrier.

2.3 MACHINE INSTALLATION

Installation of the machine involves moving the machine close to its permanent location, removing all crating, setting in place, assembling parts, and cleaning.

WARNING

Installation must be completed by a qualified electrician/refrigeration specialist.

Incorrect installation may cause personal injury, severe damage to the machine and will void factory warranty.

1. Uncrate the machine.
2. Set machine in place:

   E257A Floor Models

   a. Place in a solid level position. This machine needs a minimum of 6” (15.2 cm) air space at the back and below for proper airflow.

   b. Accurate leveling is necessary for correct dispensing of product and to ensure proper operation. Place a bubble level on top of the machine at each corner to check for level condition. If adjustment is necessary, level the machine by turning the bottom part of each leg in or out then tighten the lock nut.

   E157A Countertop Models

   a. Place on a solid level surface. This machine needs a minimum of 3” (7.6 cm) air space on both sides and 1” (2.5 cm) at the back for proper airflow.

   b. Place the included rubber pad under the machine to seal it to the surface.

CAUTION

Failure to provide adequate ventilation will void warranty.

3. Place the Stir/Off/Freezing toggle switch in the OFF position. The switch is located beneath the drip tray and cover on the lower left side of the machine.
4. Connect the power cord to the proper power supply. Refer to the nameplate on your machine for proper supply. The unit must be connected to a properly grounded receptacle. The use of an extension cord is not recommended. Do not use an adapter to circumvent the grounding requirement.

WARNING

Do not alter or deform the electrical plug in any way. Altering the plug to fit into an outlet of different configuration may cause fire, risk of electrical shock, product damage and will void warranty.

5. Install the drip tray support, drip tray, drip tray grid, and hopper cover on the machine.

Section 3 - Initial Set-Up & Installation

3.1 OPERATOR'S SAFETY PRECAUTIONS

SAFE OPERATION IS NO ACCIDENT; observe these rules:

1. Know the machine. Read and understand the Operating Instructions.
2. Notice all warning labels on the machine.
3. Wear proper clothing. Avoid loose fitting garments, and remove watches, rings or jewelry that could cause a serious accident.
4. Maintain a clean work area. Avoid accidents by cleaning up the area and keeping it clean.
5. Stay alert at all times. Know which switch, push button or control you are about to use and what effect it is going to have.
6. Disconnect power for maintenance. Never attempt to repair or perform maintenance on the machine until the main electrical power has been disconnected.
7. Do not operate under unsafe operating conditions. Never operate the machine if unusual or excessive noise or vibration occurs.

3.2 OPERATING CONTROLS AND INDICATORS

Before operating the machine, it is required that the operator know the function of each operating control. Refer to Figure 3-1 for the location of the operating controls on the machine.

⚠ WARNING

Hazardous Voltage

The Stir/Off/Freezing toggle switch must be in the OFF position prior to disassembling for cleaning or servicing. Do not operate the machine with the panels removed.

Figure 3-1 Controls

A. STIR/OFF/FREEZING SWITCH

The Stir/Off/Freezing switch is a three-position toggle switch used to control the operation of the refrigeration system and agitator.

- STIRRING ONLY: The refrigeration system is off and the agitator rotates. This setting is used for cleaning or keep the product moving when the location is closed.
- OFF: Stops the refrigeration system and agitator.
- STIRRING & FREEZING: The refrigeration system and agitator operate. This position is used for normal operation.

B. RESET SWITCH

The reset switch is a two-position breaker switch used to protect the machine from mechanical damage. The switch must be in the NORMAL OPERATING POSITION (up) for the machine to operate.

If the drive motor draws excessive current, the reset switch automatically moves to the OVERLOAD CUT-OUT FREEZER NOT OPERATING position. The refrigeration system and agitator immediately stop to protect the drive motor from damage.

If the switch moves to the OVERLOAD position, place the Stir/Off/Freezing switch in the STIRRING ONLY position. Then move the reset switch back to NORMAL OPERATING POSITION (up) and allow the freezer to stir, without refrigeration, for five minutes. After five minutes, return the Stir/Off/Freezing switch to the STIRRING & FREEZING position.

C. HIGH PRESSURE MANUAL RESET SWITCH

The High Pressure Switch is a safety switch designed to protect the compressor from damage due to excessive pressure. When tripped, the lever is out. Push it in to reset.

D. 24 HOUR TIMER

The 24 Hour Timer is located behind the lower front panel. To program the timer, rotate the program disk in the direction of the arrows to align it with the correct day and time. Each segment on the timer represents a 15 minute interval. Pull a segment out for off time and push it in for on time.

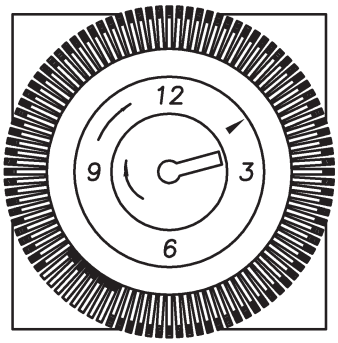

Figure 3-2 Timer

3.3 EMPTYING THE FREEZER

If the machine is empty, go to Section 3.4.

1. Place the Stir/Off/Freezing switch in the STIRRING ONLY position to allow the product to thaw.
2. While the product is thawing, remove the unused flavoring from the flavor bottles.
3. Remove the drip tray support by gently lifting the support up and out.

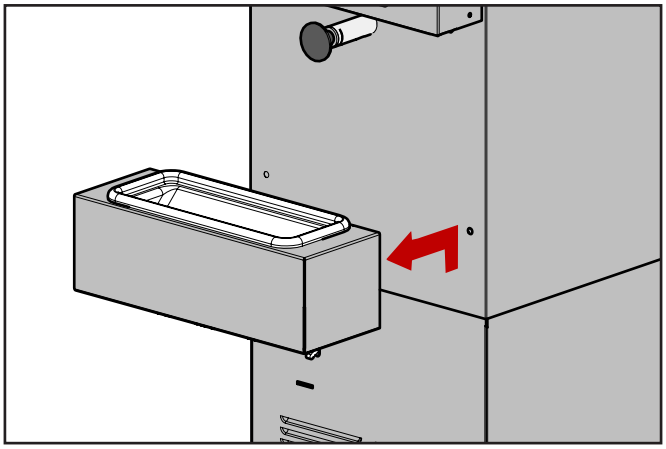

Figure 3-3 Remove Drip Tray Support

4. Place a bucket under the drain spigot and pull the spigot to dispense the product.

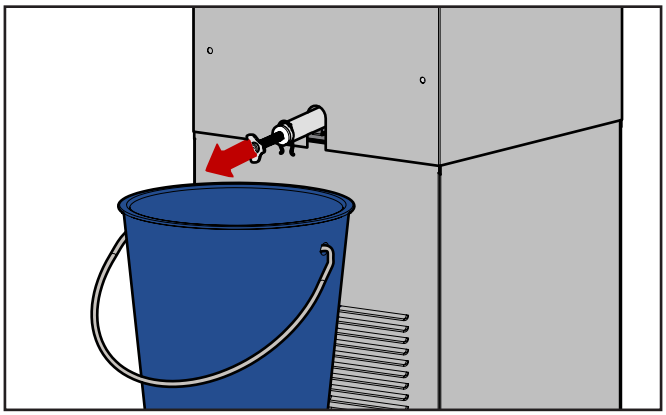

Figure 3-4 Drain Product

5. When the liquid product is completely drained, circulate warm water through the freezing cylinder to melt any remaining ice and discard the liquid.

3.4 DISASSEMBLY OF MACHINE PARTS

Before using the machine for the first time, complete machine disassembly, cleaning, and sanitizing procedures need to be followed. Routine cleaning intervals and procedures must comply with the local and state health regulations. Inspection for worn or broken parts should be made at every disassembly of the machine. All worn or broken parts should be replaced to ensure safety to both the operator and the customer and to maintain good machine performance and a quality product.

To disassemble the machine, refer to the following steps:

A. DISASSEMBLY OF EXTERIOR PARTS

1. If installed, remove the cup dispensers from the side of the machine by pulling them straight up.
2. If installed, remove the drip tray support, drip tray and drip tray grid by lifting the support up and out.
3. Remove the two-piece cover and liquid level indicator assembly.
4. Remove the flavor bottles from the bottle rack.
5. Remove the upper and lower spigot assemblies.
   a. Remove the retaining clips from the spigots.
   b. Pull the spigot assemblies straight out of the product outlet.

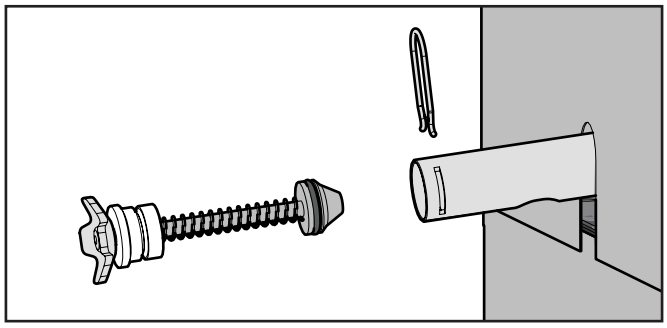

Figure 3-5 Removing Spigot Assembly

6. Wipe the lubricant off of the spigot assembly o-rings and remove the o-rings. First squeeze the o-ring upward to form a loop, then roll the o-ring out of the groove.

B. DISASSEMBLY OF INTERIOR PARTS

1. Remove the drive cap and agitator o-ring.

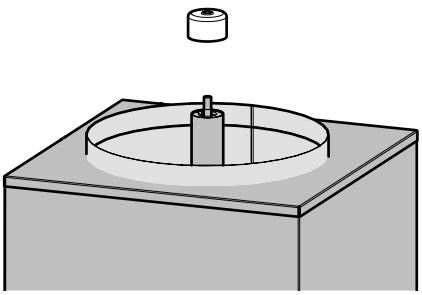

Figure 3-6 Remove Drive Cap

2. Remove the sealer ring by squeezing the looped section and lifting it out of the freezing cylinder.

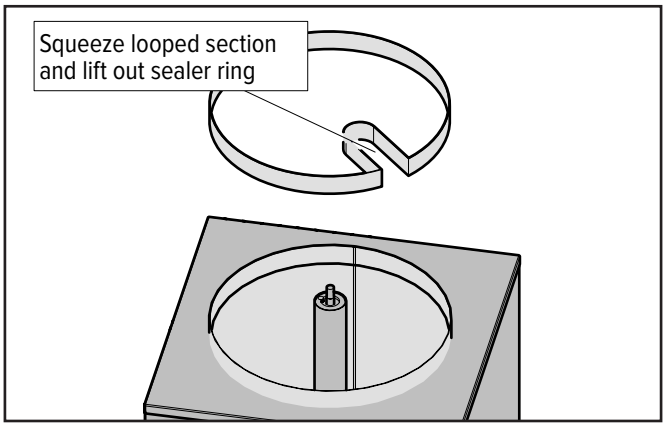

Figure 3-7 Remove Sealer Ring

3. Remove the divider plate and agitator assembly. First rotate the divider plate counterclockwise to unlock it, then lift it out of the freezing cylinder.
4. Disassemble the agitator assembly:
   a. Remove the divider plate and stationary fingers from the agitator assembly.
   b. Remove the anti-lift disk from the agitator assembly.
   c. Unscrew the divider plate from the stationary fingers.

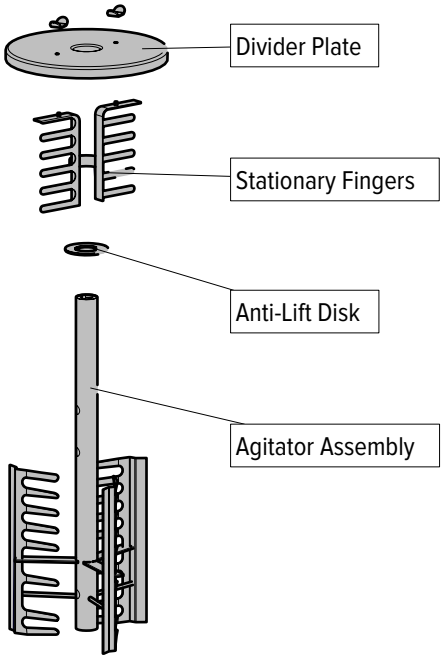

Figure 3-8 Agitator Assembly

5. Remove the agitator bushing from the bottom of the freezing cylinder.
6. Remove the drive shaft by pulling it straight up.

3.5 CLEANING DISASSEMBLED PARTS

Disassembled parts require complete cleaning, sanitizing and air drying before assembling. Local and state health codes dictate the procedure required. Some state health codes require a four sink process (pre-wash, wash, rinse, sanitize, air dry), while others require a three sink process (without the pre-wash step). The following procedures are a general guideline only. Consult your local and state health codes for the procedures required in your location.

1. Disassemble all parts. (Refer to Section 3.4 for the disassembly of machine parts)
2. Place all parts in 90° to 110°F (32°C to 43°C) mild detergent water and wash thoroughly. Make sure to pump the mild detergent water through the flavor pumps.
3. Rinse all parts with clean 90° to 110°F (32°C to 43°C) water.
4. Place all parts in a sanitizing solution for at least 1 minute, then remove and let air dry completely before assembling in machine.

A. CLEANING THE MACHINE

Interior

Using detergent solution, clean the freezing cylinder and the product outlets.

NOTE

Do not clean the inside of the vertical tube in the freezing cylinder.

Exterior

The exterior should be kept clean at all times to preserve the luster of the stainless steel. A high grade of stainless steel has been used on the machine to ease cleanup. To remove spilled or dried mix, wash the exterior with 90° to 110°F (32°C to 43°C) mild detergent water and wipe dry.

Do not use highly abrasive materials, as they will mar the finish. Use a soft cloth or sponge to apply the solution. For best results, wipe with the grain of the steel.

3.6 ASSEMBLING MACHINE

To assemble the machine parts, refer to the following steps:

NOTICE

Total Blend sanitary lubricant or equivalent must be used when lubrication of machine parts is specified.

NOTICE

The United States Department of Agriculture and the Food and Drug Administration require that lubricants used on food processing equipment be certified for this use. Use lubricants only in accordance with the manufacturer's instructions.

A. ASSEMBLE THE AGITATOR ASSEMBLY

1. Lubricate the bottom of the drive shaft. Use enough lubricant to create a 1/8" bulge at the bottom of the drive shaft.

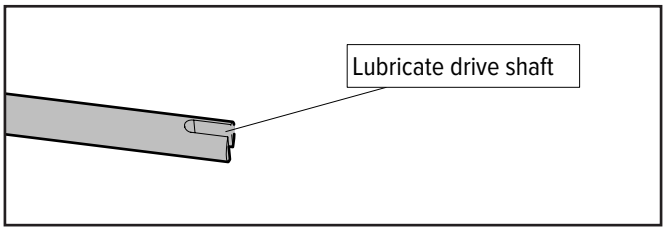

Figure 3-9 Drive Shaft Lubrication

2. Install the drive shaft into the vertical tube in the freezing cylinder. Rotate the shaft until it engages with the motor coupling.
3. Install the lower bushing onto the vertical tube.
4. Assemble the stationary fingers onto the divider plate.

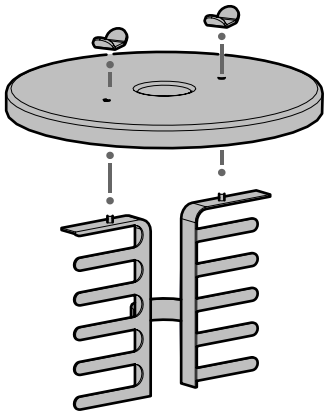

Figure 3-10 Assemble Stationary Fingers

5. Install the anti-lift disk onto the agitator assembly.
6. Install the divider plate onto the agitator assembly so that the agitator fingers are free to rotate.
7. Install the divider plate and agitator assembly onto the vertical tube in the freezing cylinder.
8. Align the assembly so the spigot indicator arrow on the divider plate is in a slightly counterclockwise direction to the upper spigot.
9. Rotate the assembly clockwise to lock it in place.

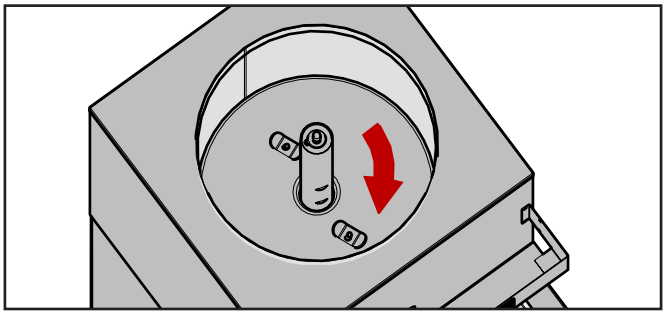

Figure 3-11 Rotate Agitator Assembly

10. Install the sealer ring by squeezing the looped section and sliding it into the freezing cylinder.

11. Install the agitator o-ring by rolling it down the tube until it creates a seal between the agitator and divider plate.

12. Rotate the agitator assembly clockwise until the guide hole at the top of the assembly forms a circle.

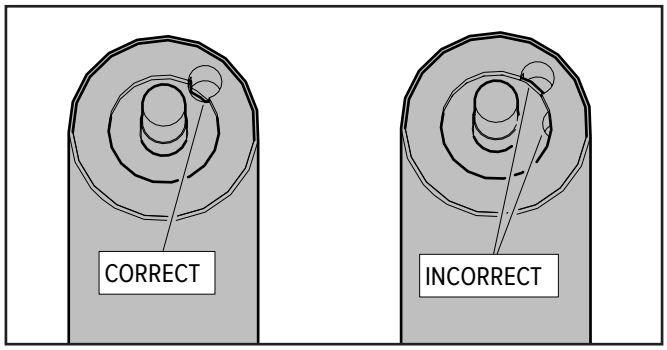

Figure 3-12 Agitator Guide Hole

13. Install the drive cap onto the agitator tube. Make sure that the guide pin in the drive cap is inserted into the guide hole.

B. ASSEMBLE EXTERIOR PARTS

1. Install the o-rings onto the spigot plugs and apply a thin layer of sanitary lubricant to the o-rings.
2. Insert the spigot assemblies into the product outlets.
3. Slide the retaining clips into position.
4. Place the flavor bottles into the bottle rack.
5. Install the drip tray support, drip tray, and drip tray grid to the front of the machine.
6. If present, install the cup dispensers on the sides of the machine.

3.7 SANITIZING

Sanitizing must be done after the machine is clean and just before the machine is filled with mix. Sanitizing the night before does not ensure sanitization the next day. However, you should always clean the machine and parts after using it.

NOTE

The United States Department of Agriculture and the Food and Drug Administration require that all cleaning and sanitizing solutions used with food processing equipment be certified for this use.

When sanitizing the machine, refer to local sanitary regulations for applicable codes and recommended sanitizing products and procedures. The frequency of sanitizing must comply with local health regulations. Mix sanitizer in quantities of no less than 2 gallons of 90°F to 110°F (32°C to 43°C) water. Allow sanitizer to contact the surfaces to be sanitized for 5 minutes. Any sanitizer must be used only in accordance with the manufacturer's instructions and provide a 100 parts per million strength solution.

1. Prepare 3 gallons of Stera-Sheen sanitizing solution following the manufacturer's instructions.
2. Pour the sanitizing solution into the hopper.
3. Use a sanitized soft bristle brush dipped in sanitizing solution to clean the sides of the freezing cylinder and the underside of the two-piece cover.
4. Place the Stir/Off/Freezing switch in the STIRRING ONLY position and allow it to operate for five minutes.
5. After five minutes, open the lower spigot to drain the sanitizing solution.

The machine is now sanitized and ready for adding liquid product.

3.8 FREEZE DOWN AND OPERATION

Sanitize immediately before use.

1. Follow the instructions on the neutral base container to mix the base with water. The freezing cylinder has a 10 gallon capacity when filled.
2. In the freezing cylinder, flush out the remaining sanitizing solution with mixed neutral base. Pour about one pint of the liquid base into the freezing cylinder and drain it out of the lower spigot.
3. Fill the freezing cylinder with mixed neutral base.
4. Remove all air trapped below the divider plate:
   a. Place a sanitized container under the serving spigot.
   b. Dispense small amounts of neutral base in short bursts.
   c. Each time the spigot is closed, bubbles rise to the top of the freezing cylinder.
   d. When no more bubbles rise to the top, pour the neutral base in the container back into the freezing cylinder.
5. Place the Stir/Off/Freezing switch in the STIRRING & FREEZING position.
6. Although product can be dispensed after an hour, the best quality ice crystals develop after the machine has been operating for several hours.
7. To serve:
   a. Pump flavor into the desired cup size. One pump for small, two pumps for medium, and three pumps for large.
   b. Pull the spigot out to dispense product.
   c. When the cup is full, push the spigot in to stop dispensing.

Section 4 - Maintenance and Adjustments

This section is intended to provide maintenance personnel with a general understanding of the machine adjustments. It is recommended that any adjustments be made by a qualified person.

WARNING

Hazardous voltage

The machine must be disconnected from electrical supply before servicing. Failure to disconnect power before servicing could result in death or serious injury.

4.1 PREVENTATIVE MAINTENANCE

It is recommended that a preventative maintenance schedule be followed to keep the machine clean and operating properly. The following steps are suggested as a preventative maintenance guide.

A. DAILY

Check for any unusual noise or condition and repair immediately.

Clean the drip tray.

B. MONTHLY CHECKS

Check for worn or broken parts and replace parts as necessary.

C. QUARTERLY CHECKS

Have a qualified service technician check the condenser and filter for dirt and clean if necessary.

WARNING

Service must be completed by a qualified electrician/refrigeration specialist.

Improper service may cause personal injury, severe damage to the machine.

4.2 EXTENDED STORAGE

Refer to the following steps for storage of the machine over any long period of shutdown time:

1. Place the Stir/Off/Freezing switch in the OFF position.
2. Disconnect the machine from the power source.
3. Thoroughly clean all parts that come in contact with mix with warm detergent water. Rinse in clear water and dry all parts. Do not sanitize.

NOTE

Do not let cleaning solution stand in the freezing cylinder or hopper during the shutdown period.

4. Remove, disassemble, and clean the spigot assemblies and lower bushing. Leave disassembled during the shutdown period.
5. Place the spigot assemblies and bushing in a plastic bag with a moist paper towel. This prevents them from becoming brittle if exposed to dry air over an extended period of time (over 30 days).

5.1 DECALS & LUBRICATION

Part Number	Description	Quantity
208409	Brush - 1-1/2” x 4” x 30”	1
236014	Card - Cleaning Instruction	1
324105	Decal - Caution Electrical Shock	2
324107	Decal - Caution Hazardous Moving Parts	2
324113	Decal - Caution Grounded Plug	1
324135	Decal - Toggle & Reset Switch	1
324200	Decal - High Pressure Cut-Out	1
324566	Decal - Wired According To (Floor)	1
324584	Decal - Adequate Ventilation 3” (E257)	1
324649	Decal - Adequate Ventilation (E157)	1
325024	Decal - Stoelting (Black) (Small) (Floor)	1
325032	Decal - White Glove Service	1
508053	Lubricant - Total Blend (50 Packets)	-
2209514	Maintenance Kit - Annual	-
2209515	Maintenance Kit - Semi-Annual	-

5.2 AGITATOR ASSEMBLY

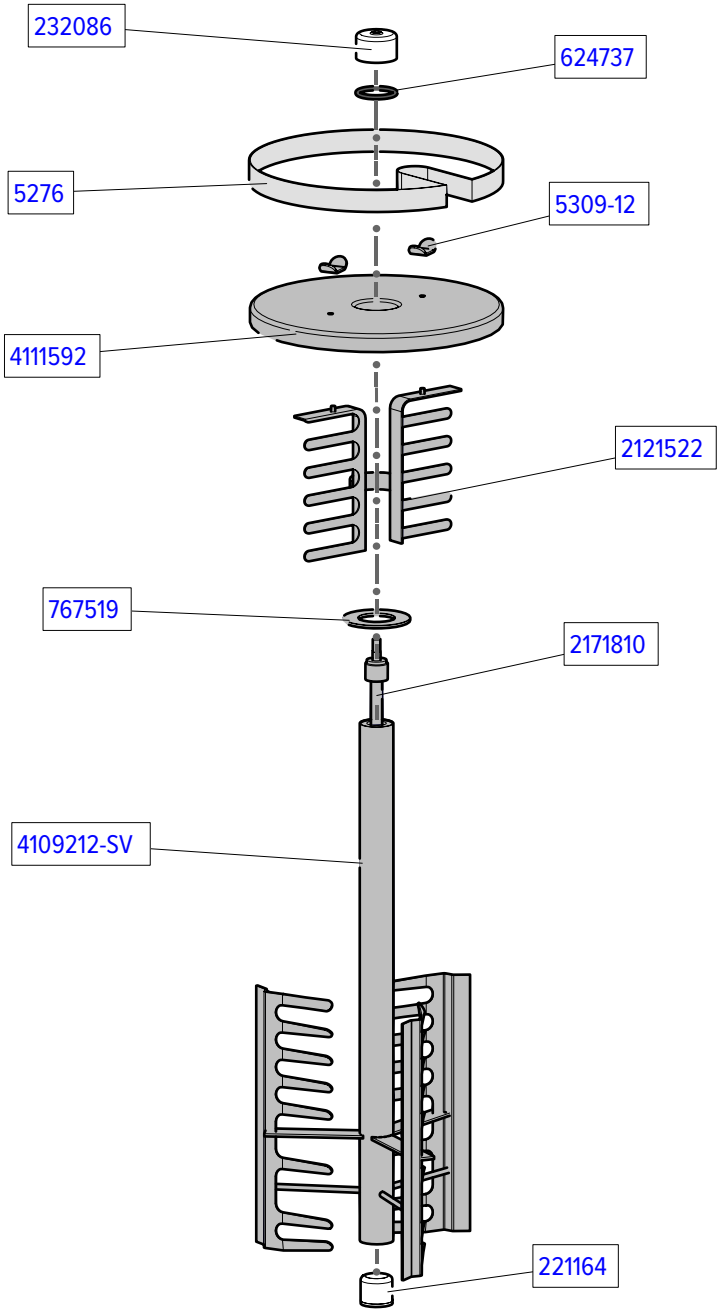

Part Number	Description	Quantity
5276	Sealer Ring (Stainless Steel)	1
5309-12	Wing Nut	1
221164	Bushing - Agitator Bottom Center Post	1
232086	Cap - Drive	1
624737-5	O-Ring - Agitator - Black (5 Pack)	1
767519	Disc - Anti-Lift	1
2121522	Stationary Finger (Baffle Assembly)	1
2171810	Drive Shaft	1
4109212-SV	Agitator - Three Blade	1
4111592	Plate - Divider	1

5.3 TRAYS & HOPPER COVER

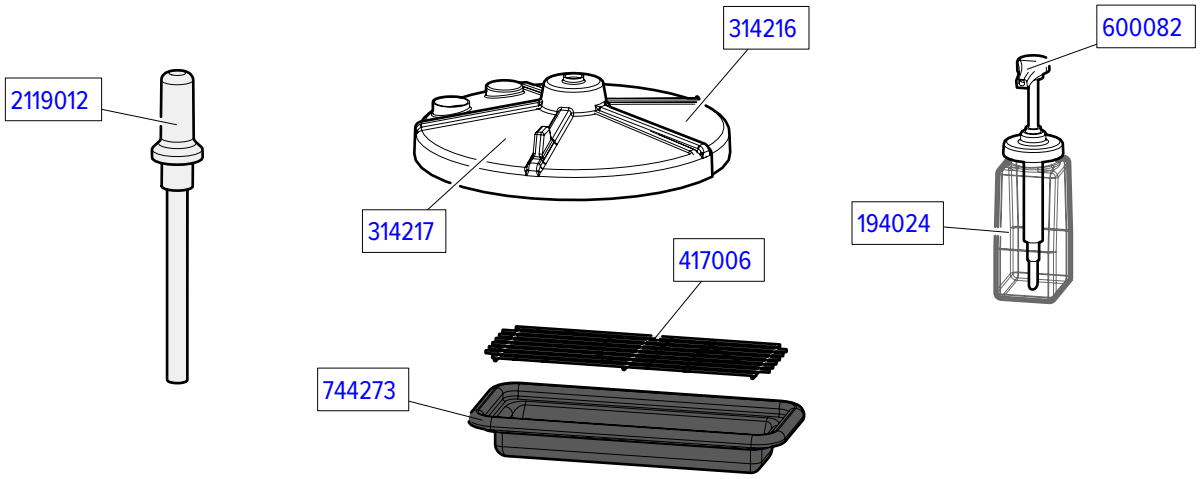

Part Number	Description	Quantity
194019	Bottle - Flavor (Glass)	-
194024	Bottle - Flavor (Plastic)	6
314216	Cover - Plastic	1
314217	Cover - Sliding	1
417006	Insert - Drip Tray (Vinyl Coated Metal)	1
600058	Pump - Flavor (Glass Bottle)	-
600082	Pump - Flavor (Plastic Bottle)	6
624715-5	O-Ring - Liquid Level Indicator (5 Pack)	1
744205	Insert - Drip Tray (Black Plastic)	-
744221	Tray - Drip (White Plastic)	-
744273	Tray - Drip (Black Plastic) (For Stainless Tray Assembly)	1
2119012	Indicator - Liquid Level Assembly	1
2206858	Insert - Drip Tray (Louvered Stainless) (For #744273 Drip Tray)	-

5.4 SPIGOT ASSEMBLIES

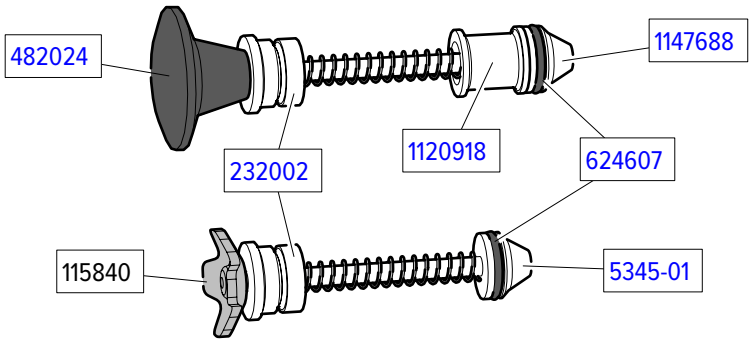

Part Number	Description	Quantity
5345-01	Shaft & Plug Assembly (Lower Spigot)	1
232002	Cap - Retaining (Top & Lower Spigot)	2
482024	Knob (Upper Spigot)	1
624607-5	O-Ring - Top & Bottom Spigot - Black (5 Pack)	2
696130	Clip - Lock - Horseshoe Clip	2
1115840	Handle - (Lower Spigot) (Thumb Nut)	1
1120918	Splash Deflector	1
1123323	Spigot - Lower Assembly	1
1147688	Shaft & Plug Assembly (Upper Spigot)	1
2147689	Spigot - Upper Assembly	1