# Fusion® User Manual

PART NUMBER: 21-35145

Structural Concepts®
DELIVERING FRESH. ALWAYS.™

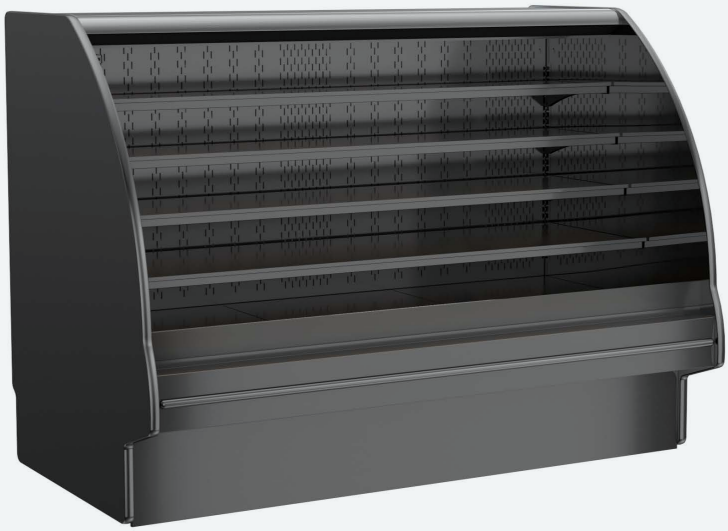

GHSS660R

## Please Note

Your specific model number is located on the serial label (usually at the case rear). However, label locations may vary depending on the model – see page 20 for more details.

Models shown on this cover sheet do not represent all models covered by this manual.

## Models

- GHSS460R
- GHSS456R
- GHSS556R
- GHSS656R
- GHSSEH452RSC.6235
- GHSSEH452RSC.7819

**Support:** structuralconcepts.com/support
**Tech Service/Warranty:** 1 (800) 433-9490, EXT. 1
**Hours:** Monday – Friday, 8am to 8pm EST (Closed holidays)

**Before contacting, you must have the following:**
Serial no., model no., store no., store address, details (photos, leak locations, damage, store's ambient conditions, etc.)

# Table of Contents


Overview / Type / Compliance / Warnings / Precautions / Wiring / Plugs ..... **3-5**

Installation: Case Removal From Skid ..... **6-7**

Installation: Start Up ..... **8**

Placement of Case ..... **9**

Product Placement ..... **10**

Shelf and Deck Load Limits ..... **11**

Front Panel Removal ..... **12**

Rear Panel Removal ..... **13**

Cleaning Schedule (To Be Performed by Store Personnel) ..... **14**

Preventative Maintenance ..... **15-19**

Serial Label Information & Location ..... **20**

Programmable Controller Information ..... **21**

Technical Service Contact Information / Warranty Information ..... **22**

# Overview / Type / Compliance / Warnings / Precautions / Wiring / Plugs

## Overview

These Structural Concepts cases are designed to merchandise packaged products at 41 °F (5 °C) or less product temperatures.

Refrigerated Display cases are classified by "Test Room Climate Class." Test Room Climate Class 8 is to be operated in an environment of 24°C (75.2°F) 55% R.H.

Product must be pre-chilled to 41 °F (5 °C) or less before being placed in the case.

Component parts shall be replaced with like components.

Cases should be installed and operated according to this operating manual's instructions to ensure proper performance. Improper use will void warranty.

## NSF/ANSI Type I vs. II Environmental Conditions

This case is designed to display products in ambient indoor store conditions where temperature and humidity are maintained within a specific range.

NSF/ANSI Type I Conditions: Product is displayed in store conditions with a maximum ambient temperature of 75 °F (24 °C) and maximum relative humidity of 55%.

NSF/ANSI Type II Conditions: Product is displayed in store conditions with a maximum ambient temperature of 80 °F (27 °C) and maximum relative humidity of 55%.

If you are unsure if your unit is classified as NSF/ANSI Type I or Type II, see the tag next to the serial label on your case.

## Compliance

Performance issues when in violation of applicable NEC, federal, state and local electrical and plumbing codes are not covered by warranty.

This equipment MUST be installed in compliance with all applicable NEC, federal, state, and local electrical and plumbing codes.

## Warnings

This page contains important warnings to prevent injury or death. Please read carefully!

Risk of electric shock. Disconnect power before servicing the unit. **CAUTION!** More than one source of electrical supply is employed with units that have separate circuits. Disconnect *ALL ELECTRICAL SOURCES* before servicing.

Hazardous moving parts. Do not operate the case with the covers removed. Fan blades may be exposed when deck panel is removed. Disconnect power before removing deck panel.

This product can expose you to chemicals, including Urethane (Ethyl Carbonate), which are known to the state of California to cause cancer and birth defects or other reproductive harm. For more information, go to P65Warnings.ca.gov.

Condensate pan and overflow condensate pans are HOT! Disconnect and allow to cool before cleaning or removing from case.

Do not place any items on the glass top surface to prevent scratching or marring.

## Precautions

The following are important precautions to prevent damage to the case or merchandise. Read carefully!

### CAUTION! Lamp Replacement Guidelines

> LED lamps reflect specific sizes, shapes, and design. Any replacements must meet factory specification, resist breakage and reflect similar appearance as lamps from the factory.

### CAUTION!

> These cases are not to be installed in lobbies or locations of egress, such as hallways or public corridors. If case is placed in an enclosure or surrounding structure, keep all of the case's ventilation openings clear of obstructions. The unit is not intended for use by persons (including children) with reduced physical, sensory, or mental capabilities, or lack of experience and knowledge, unless they have been give supervision or instruction concerning use of the unit by a person responsible for their safety. Children should be supervised to ensure that they do not 'play with unit.

### CAUTION! Power Cord and Plug Maintenance

> Risk of electric shock if cord or plug becomes damaged, replace only with cord and plug of same type.
>
> Power cord should only be replaced by qualified service personnel.

### CAUTION! Do Not Rely On Thermometers or Thermostats for Product (Food) Temperatures.

> Thermometers & thermostats reflect air temperatures ONLY.
>
> Use a calibrated food probe thermometer for actual product (food) temperatures.
>
> For accurate readings, DO NOT use infrared food thermometers. Self-contained case clearance: 6" min. air intake / 6" min. air discharge.

### CAUTION! Check Condensate Pan, Its Position & Plug! Water On Flooring Can Cause Extensive Damage!

> Before powering up case, check that condensate pan is positioned directly under case's condensate drain.
>
> Before powering up case, check that condensate pan's electrical plug is SECURELY connected to condensate system's receptacle.
>
> If wicking material is used in condensate pan, check that it is secure.

## Wiring Diagram

Each case has its own wiring diagram folded and in its own packet. It may be placed near ballast box, field wiring box, raceway cover, or other related location.

## Refrigerant Disclosure Statement

This equipment is prohibited from use in California with any refrigerants on the "List of Prohibited Substances" for that specific end-use, in accordance with California Code of Regulations, title 17, section 95374.

This disclosure statement has been reviewed and approved by Structural Concepts and Structural Concepts attests, under penalty of perjury, that these statements are true and accurate.

## Refrigerant Warnings

Following are important information regarding refrigerants. Read carefully!

### DANGER

Refrigeration unit contains gas under high pressure. Do not tamper with or puncture the system. Contact qualified service personnel before disposal.

Risk of fire or explosion. Flammable refrigerant is used in this case.

Minimum room area (operating or storage): 77.25 $ft^2$ (7.1 $m^2$)

Consult repair manual/owner's guide before servicing this product.

Do not store explosive substances (such as aerosol cans with a flammable propellant) in this case.

Do not use an electrical appliance INSIDE the food storage compartments unless its type is recommended by manufacturer.

To minimize risk of ignition due to incorrect parts or improper service, this case is ONLY to be serviced by factory authorized service personnel.

Flammable refrigerant type specified on case nameplate is on the serial label.

APPLIES TO R290 REFRIGERANT MODELS ONLY! Contains a charge of 150g of R290 refrigerant with a lower flammability limit (LFL) of .038kg/$m^3$.

Do not use means to accelerate the defrosting process or to clean, other than those recommended by the manufacturer.

The appliance shall be stored in a room without continuously operating ignition sources (for example: open flames, an operating gas appliance or an operating electrical heater).

Do not pierce or burn.

Be aware that refrigerant may not contain an odor.

### CAUTION: REFRIGERANT RECOVERY/RECYCLING/DISPOSAL

When recycling or discarding case, refrigerants MUST BE handled according to local, state and federal codes, requirements and regulations.

If disposing of a refrigerated case that uses ozone depleting chemicals in its refrigeration system, make sure the refrigerant is removed by a qualified service technician and properly disposed of.

If you intentionally release refrigerant into the atmosphere, you may be subject to fines or other penalties (under regulation mandated by environmental regulators and/or legislative edict.)

# Installation: Case Removal From Skid

**Remove Lower Front Panel From Case:**

- To prevent damage to the case, remove the lower front panel from the case before removing it from the pallet.
- The lower front is held in place by magnets only. No screw removal is required.
- Place the lower front panel in a secure location while removing the case from the pallet.

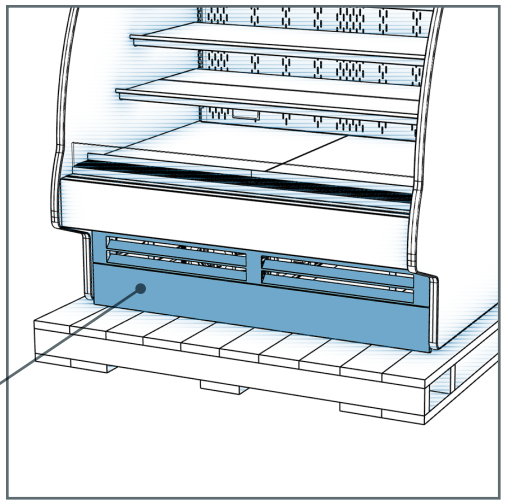


**Remove Lower Rear Panel From Case:**

- Remove the lower rear panel from the case before removing it from the pallet.
- The lower rear is held in place by magnets only. No screw removal is required.
- Place the lower rear panel in a secure location while removing the case from the pallet.

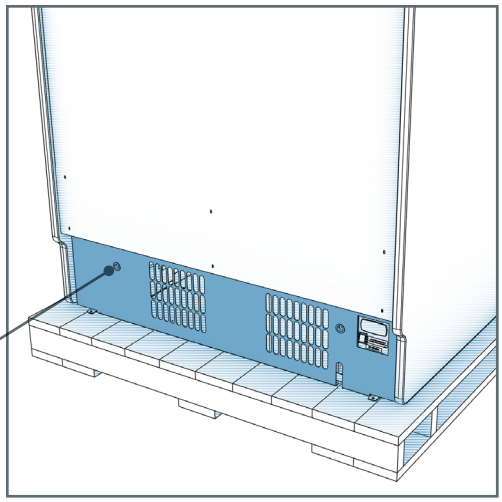


**Disconnect Case From Pallet:**

- Remove screws from shipping brackets. Remove and discard shipping brackets from the pallet.
- Raise the leveler all the way up to engage the casters.

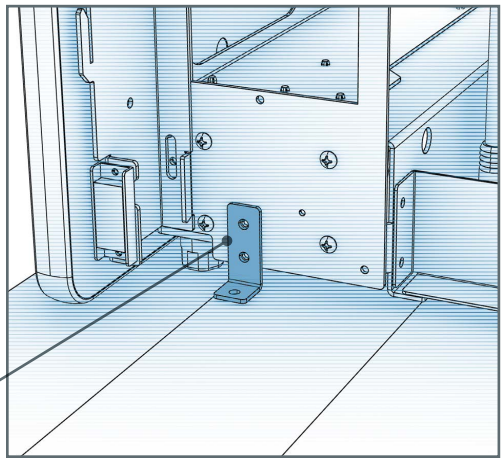

# Installation: Case Removal From Skid

**Levelers:**

- There are levelers on each corner of the case.
- Raise levelers to their highest position to engage the casters.

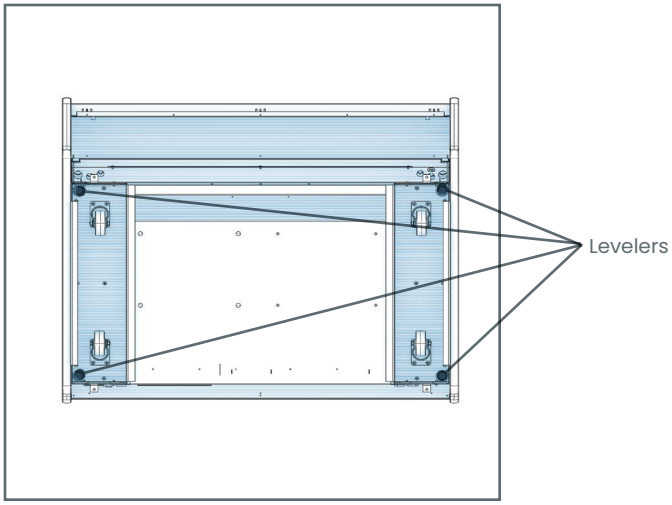


**Carefully Remove Case From Pallet:**

- Check that levelers are fully raised.
- Carefully lower to the floor (using a ramp if available).
- Slide pallet from under case as required.
- Maintain support of the case at all times, or the center of gravity may cause the case to fall.
- See the illustration at right.

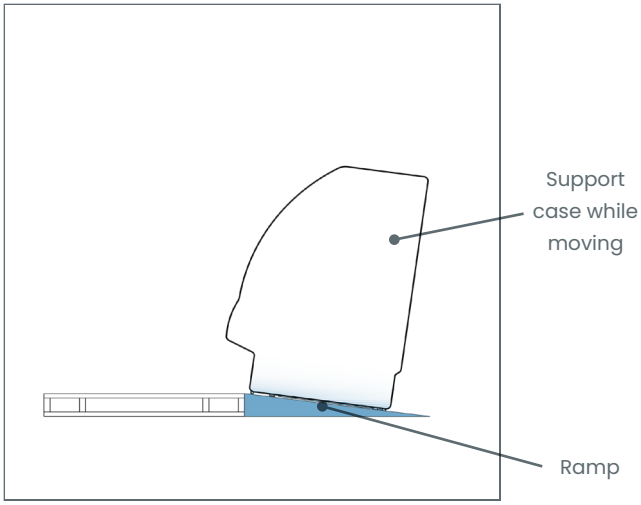


**Levelers:**

- After the case is at the desired position, lower the levelers to secure the case in position. Check that the case is level.
- Adjust height as needed.

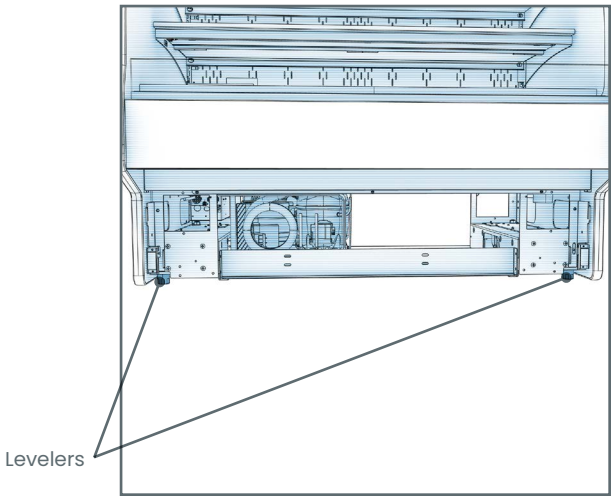

# Installation: Start Up

**Plug Case In/Turn On Main Power Switch:**

- Do not use an extension cord with this case.
- Do not operate this equipment with a damaged cord, plug, or outlet.
- Ensure that the main power switch is off.
- Route the power cord through the appropriate knockout in the rear panel. Install the supplied cord bushing in the knockout hole. Do not install cord without bushing.
- Plug the cord into a certified 240V electrical outlet with ground.
- Turn the main power switch on.
- Coil fans should turn on.
- From inside of the case, check for discharge air from front baffle, to confirm that the fans are functioning properly.
- When the case is in a start-up mode or has been idle for a long period of time, the case may require 75 minutes running time to pull down the temperature.
- Turn lights on.
- Light switch is located on the ceiling of merchandising area.
- The lights should come on at the same time.
- Always maintain front and rear airflow clearance of four inches.
- Obstruction or restriction of air can void warranty.
- Note: Case temperature setting is determined by case size. Temperature is controlled by a thermostat.

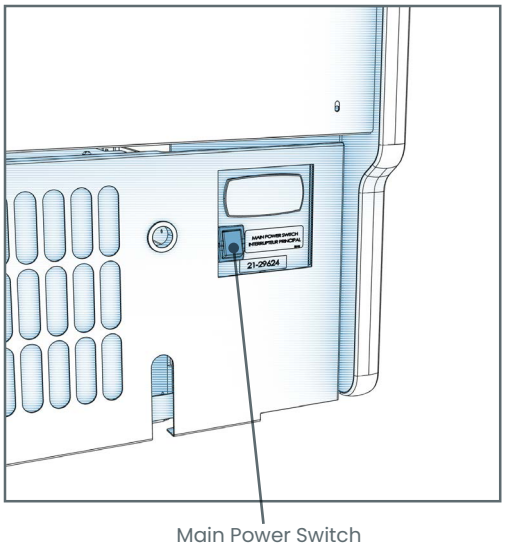


Main Power Switch

Light Switch

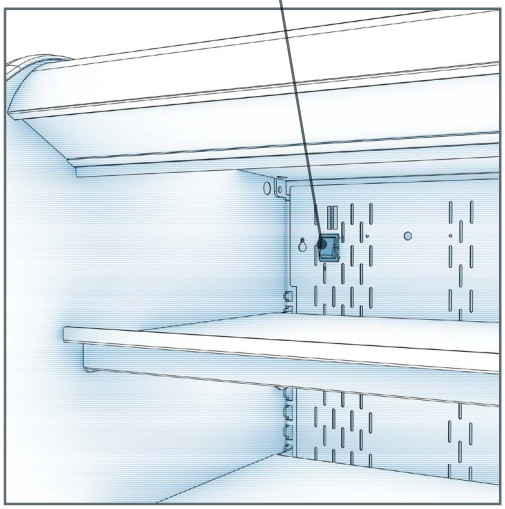

# Placement of Case

Consider where the display case will be positioned relative to walls, ceilings, HVAC vents, windows, and other equipment discharging warm air.

## The 5′ - 10′ - 15′ Rule

**Stay 5′ away from an exterior window**

> Direct sunlight increases the heat load on the front of the display resulting in the refrigeration system having to work harder and possible condensation on the case.

**Remain 10′ away from HVAC ceiling vents**

> Air blowing on the front of the display interrupts the air curtain and causes product temperatures to increase.

Minimum 4″ clearance to walls & ceilings.
Some models can be positioned right to the wall & ceiling.
Refer to spec sheets & design guide for further information.

> With service display cases that have a glass front, air blowing on the front glass causes condensation to develop.

**Position the display 15′ away from exterior doors**

> Air drafts from the front exterior doors interrupt the air curtain, allowing warm air to penetrate the inside of the display, affecting product temperature.

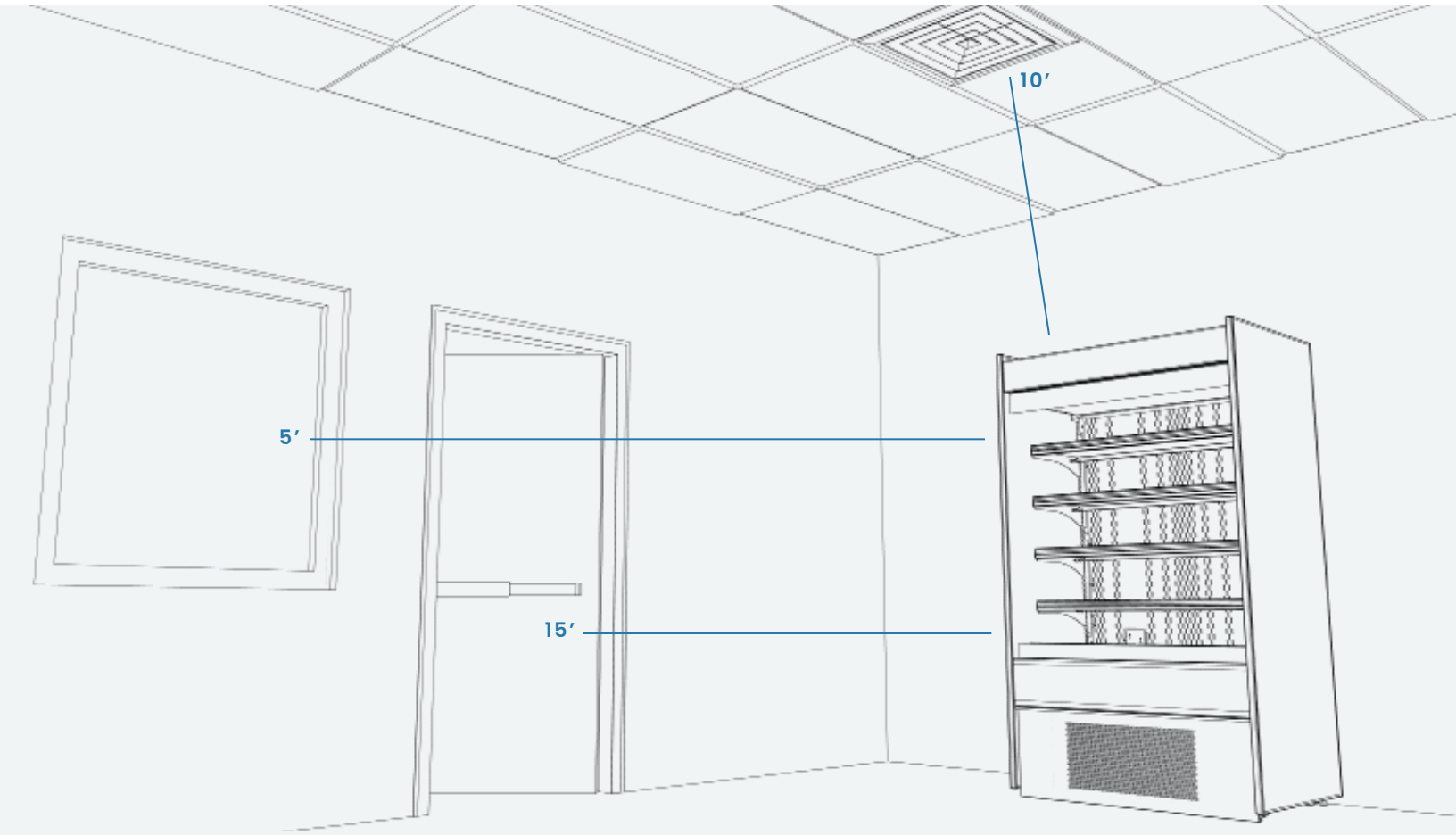

### Product Placement

Product can be placed on decking. Proper airflow is critical to maintaining proper product temperature. Product should not be placed on air grills inside of the case and have at least 1 inch of clearance between product and discharge. See merchandising illustration below.

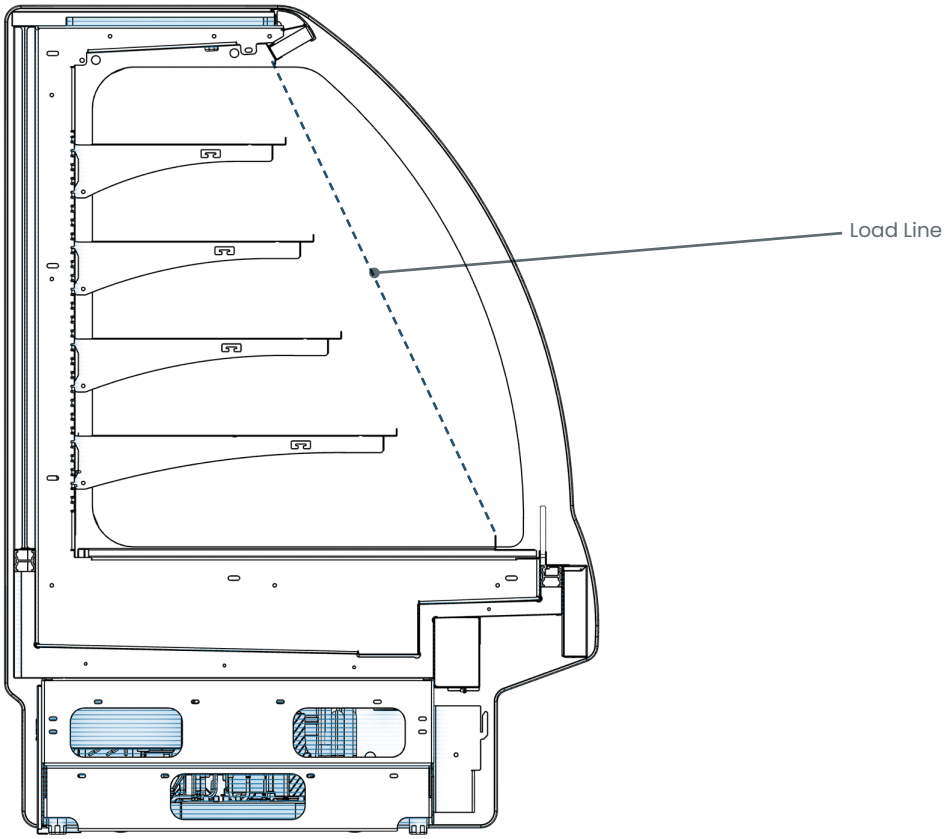


Model GHSS460R Shown Above

# Shelf and Deck Load Limits

The chart below lists the load limits for the shelves and decks. All weights below are for a uniformly distributed load. All values are in pounds.

| MODEL | MAX 14"D SHELF LOAD | MAX 16"D SHELF LOAD | MAX 18"D SHELF LOAD | MAX 22"D SHELF LOAD | MAX DECK PAN LOAD |
|---|---|---|---|---|---|
| **GHSS460R** | 123.2 | 154 | 154 | 184.8 | 277.2 |
| **GHSS456R** | NA | 165 | 165 | 231 | 139/Pan |
| **GHSS556R** | NA | 209 | 209 | 293 | 178/Pan |
| **GHSS656R** | NA | 253 | 253 | 354 | 139/Pan |
| **GHSSEH452RSC.6235** | 123.2 | NA | 154 | NA | 277.2 |
| **GHSSEH452RSC.7819** | NA | NA | 154 | NA | 277.2 |

# Front Panel Removal

**Servicing of refrigeration components is to be done by a licensed refrigeration contractor.**

- Remove lower front panel from the magnets to access the compressor package.
- Carefully slide condenser package pan out from under case to access various components.
- For reassembly, reverse the order items were removed.

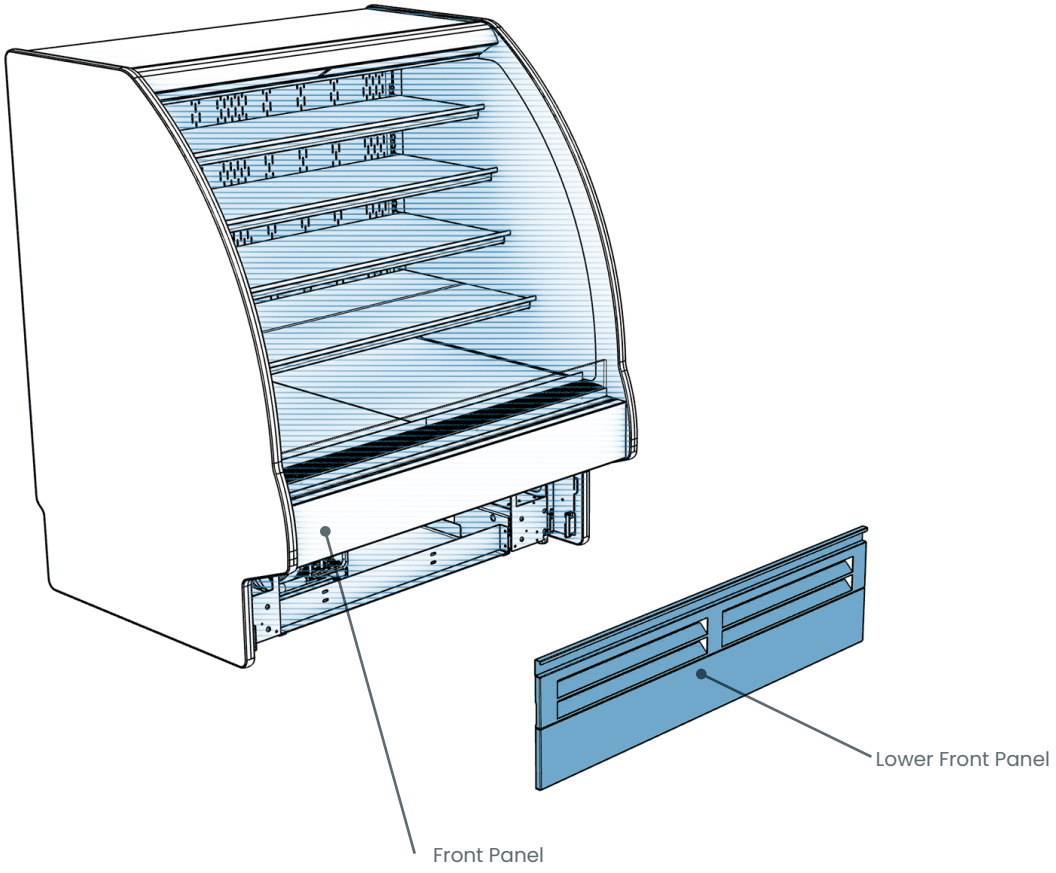

# Lower Rear Panel Removal

**Servicing of refrigeration components is to be done by a licensed refrigeration contractor.**

- Remove lower rear panel by grabbing the bottom of the panel and pull forward to release magnets.
- Carefully slide condenser package pan out from under case to access various components.
- For reassembly, reverse the order items were removed.

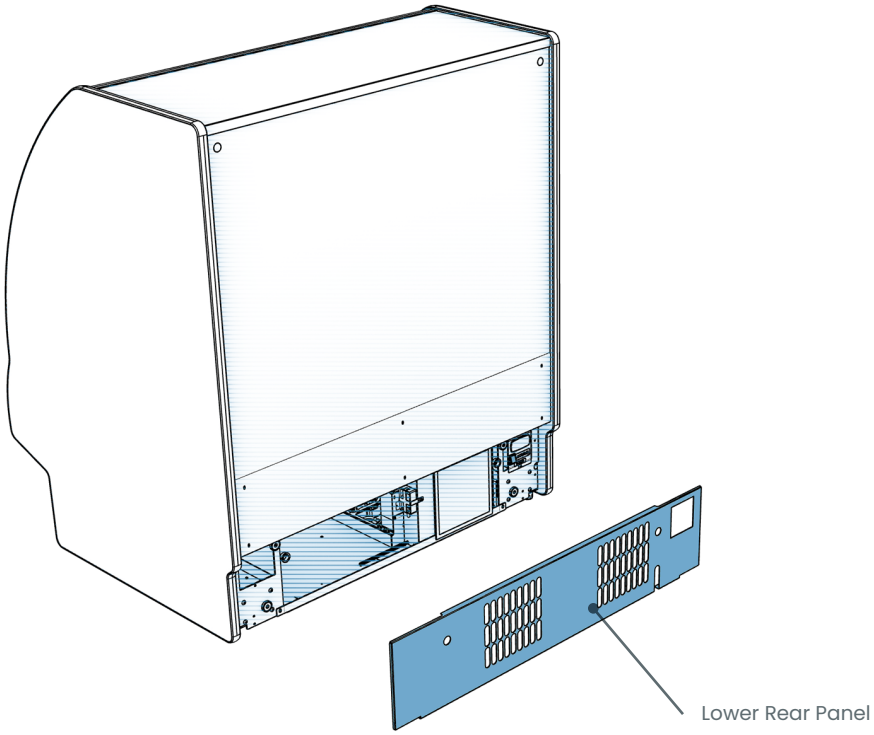

# Cleaning Schedule (To Be Performed by Store Personnel)

| FREQUENCY | INSTRUCTIONS |
|---|---|
| Daily | **Glass Surfaces:** Clean glass surfaces and shelves with household or commercial glass cleaner. |
| Daily | **Exterior Panels:** Wipe off all surfaces with warm water and mild soap solution and non-abrasive cloth. |
| Daily | **Decks:** Wipe off decks with a moist cloth dipped in mild soap and water solution.. |
| Daily | **Acrylic Surfaces:**<br>• Clean: Use a soft, clean cloth dipped in a solution of warm water and a small amount of mild liquid soap. Apply light pressure while wiping away all smudges and residue.<br>• Rinse: Use pure water in a spray bottle to rinse.<br>• Dry: Use non-abrasive clean cloth.<br>• Polishing: Buff with a light coat of automobile paste wax or plastic cleaner/polish.<br>• Scratches: Use high-quality buffing compound. Carefully follow instructions.<br>• Never use window or household cleaning products. |
| Daily | **Stainless Steel Surfaces:**<br>• Wash with a solution of hand dish-washing liquid detergent and water or a solution of baking soda and water. Rinse and polish dry with a soft cloth.<br>• Never use scouring powders or steel wool as they will scratch stainless steel.<br>• Brighten by polishing with a cloth dipped in vinegar or in ammonia; sprinkle baking soda on a sponge and rub gently, rinse. Polish dry with soft cloth.<br>• Remove streaks or heat stains from stainless steel by rubbing with club soda.. |
| Weekly | **Magnetic Condensing Coil Filter:**<br>• This filter helps prevent dust particles from entering condenser coil.<br>• It is accessible at the air intake side of the case.<br>• Magnetic condenser coil filter is dishwasher safe; remove from case and use a rag or soft-bristled brush to wipe off excess dust particles from filter. Run in normal dishwasher cycle. Remove from dishwasher<br>• Dry with a soft cloth or allow to air dry. Replace in case. |
| Quarterly | **Under Case Cleaning:**<br>• Remove lower front and rear panels. Unlock caster and lower to floor.<br>• Slide the case out of the current position, and slide the condenser package out from under the case.<br>• Use a vacuum with brush to remove all dust, dirt, food particles, or residue from underside of the case.<br>• Place the case back in position and replace the front and rear panels. |

## Maintenance and Service Notes

**WARNING! TURN OFF CASE BEFORE PERFORMING PREVENTATIVE MAINTENANCE**

- All maintenance staff and others working in the local area shall be instructed on the nature of work being carried out. Work in confined spaces shall be avoided.
- The area shall be checked with an appropriate refrigerant detector prior to and during work, to ensure the technician is aware of potentially toxic or flammable atmospheres. Ensure that the leak detection equipment being used is suitable for use with all applicable refrigerants, i.e., non-sparking, adequately sealed, or intrinsically safe.
- If any hot work is to be conducted on the refrigerating equipment or any associated parts, appropriate fire extinguishing equipment shall be available on hand. A dry chemical or CO2 fire extinguisher should be adjacent to the charging area.
- No person carrying out work in relation to a refrigerating system which involves exposing any pipe work shall use any sources of ignition in such a manner that it may lead to the risk of fire or explosion. All possible ignition sources, including cigarette smoking should be kept sufficiently far away from the site of installation, repairing, removing and disposal, during which refrigerant can possibly be released to the surrounding space. Prior to work taking place, the area around the equipment shall be surveyed to make sure that there are no flammable hazards or ignition risks. "No Smoking" signs shall be displayed.
- Ensure that the area is in the open or that it is adequately ventilated before breaking into the system or conducting any hot work. A degree of ventilation shall continue during the period that the work is carried out. The ventilation should safely disperse any released refrigerant and preferably expel it externally into the atmosphere.

**Checks to the refrigerating equipment**

- Where electrical components are being changed, they shall be fit for the purpose and to the correct specification. At all times, the manufacturer's maintenance and service guidelines shall be followed. If in doubt, consult the manufacturer's technical department for assistance.
- The following check shall be applied to installation using FLAMMABLE REFRIGERANTS:
    a. The actual REFRIGERANT CHARGE is in accordance with the room size within which the refrigerant containing parts are installed;
    b. The ventilation machinery and outlets are operating adequately and are not obstructed;
    c. If an indirect refrigeration circuit is being used, the secondary circuit shall be checked for the presence of refrigerant;
    d. Marking to the equipment continues to be visible and legible. Markings and signs that are illegible shall be corrected;
    e. Refrigerating pipe or components are installed in a position where they are unlikely to be exposed to any substance which may corrode refrigerant containing components, unless the components are constructed of materials which are inherently resistant to being corroded or are suitably protected against being so corroded.

**Checks to electrical devices**

- Repair and maintenance to electrical components shall include initial safety checks and component inspection procedures. If a fault exists that could compromise safety, then no electrical supply shall be connected to the circuit until it is satisfactorily dealt with. If the fault cannot be corrected immediately but it is necessary to continue operation, an adequate temporary solution shall be used. This shall be reported to the owner of the equipment, so all parties are advised.
- Initial safety checks shall include:
    a. That capacitors are discharged: this shall be done in a safe manner to avoid possibility of sparking;
    b. That no live electrical components and wiring are exposed while charging, recovering or purging the system;
    c. That there is continuity of earth bonding.

## Maintenance and Service Notes

**WARNING! TURN OFF CASE BEFORE PERFORMING PREVENTATIVE MAINTENANCE**

**Repairs to sealed components**

- During repairs to sealed components, all electrical supplies shall be disconnected from the equipment being worked upon prior to any removal of sealed covers, etc. If it is absolutely necessary to have an electrical supply to equipment during servicing, then a permanent opening form of leak detection shall be located at the most critical point to warn of a potentially hazardous situation.
- Particular attention shall be paid to the following to ensure that by working on electrical components, the casing is not altered in such a way that the level of protection is affected. This shall include damage to cables, excessive number and connections, terminals not made to original specification, damage to seals, incorrect fitting of glands, etc.
- Ensure that the apparatus is mounted securely.
- Ensure that seals or sealing materials have not degraded to the point that they no longer serve the purpose of preventing the ingress of flammable atmospheres. Replacement parts shall be in accordance with the manufacturer's specifications.

**Repair to intrinsically safe components**

- Do not apply any permanent inductive or capacitance loads to the circuit without ensuring that this will not exceed the permissible voltage and current permitted for the equipment in use.
- Intrinsically safe components are the only types that can be worked on while live in the presence of a flammable atmosphere. The test apparatus shall be at the correct rating.
- Replace components only with parts specified by the manufacturer. Other parts can result in the ignition of refrigerant in the atmosphere from a leak.
- NOTE The use of silicon sealant can inhibit the effectiveness of some types of leak detection equipment. Intrinsically safe components do not have to be isolated prior to working on them.

**Cabling**

- Check that cabling will not be subject to wear, corrosion, excessive pressure, vibration, sharp edges, or any other adverse environmental effects. The check shall also take into account the effects of aging or continual vibration from sources such as compressors or fans.

**Detection of flammable refrigerants**

- Under no circumstances shall potential sources of ignition be used in the searching for or detection of refrigerant leaks. A halide torch (or any other detector using a naked flame) shall not be used.
- The following lead detection methods are deemed acceptable for all refrigerant systems.
- Electronic leak detectors may be used to detect refrigerant leaks but, in the case of FLAMMABLE REFRIGERANTS the sensitivity might not be adequate, or might need recalibration. (Detection equipment shall be calibrated in a refrigerant-free area.) Ensure that the detector is not a potential source of ignition and is suitable for the refrigerant used. Leak detection equipment shall be set at a percentage of the LFL of the refrigerant and shall be calibrated to the refrigerant employed, and the appropriate percentage of gas (25% maximum) is confirmed.
- Leak detection fluids are also suitable for use with most refrigerants but the use of detergents containing chlorine shall be avoided as the chlorine can react with the refrigerant and corrode the copper pipe-work.
- NOTE examples of leak detection fluids are
  - -Bubble method.
  - -Fluorescent method agents.
- If a leak is suspected, all naked flames shall be removed/extinguished.
- If a leakage of refrigerant is found which requires brazing, all of the refrigerant shall be recovered from the system, or isolated (by means of shut off valves) in a part of the system remote from the leak. Removal of refrigerant shall be according to the removal and evacuation procedures below.

## Maintenance and Service Notes

**WARNING! TURN OFF CASE BEFORE PERFORMING PREVENTATIVE MAINTENANCE**

**Removal and evacuation**

- When breaking into the refrigerant circuit to make repairs-or for any other purpose-conventional procedures shall be used. However, for flammable refrigerants it is important that the best practice be followed, since flammability is a consideration. The following procedure shall be adhered to:
    a. Safely remove refrigerant following local and national regulations;
    b. Purge the circuit with inert gas;
    c. Evacuate (optional for A2L);
    d. Purge with inert gas (optional for A2L);
    e. Open the circuit by cutting or brazing.
- The refrigerant change shall be recovered into the correct recovery cylinders if venting is not allowed by local and national codes. For appliances containing flammable refrigerants, the system shall be purged with oxygen-free nitrogen to render the appliance safe for flammable refrigerants. This process might need to be repeated several times. Compressed air or oxygen shall not be used for purging refrigerant systems.
- For appliances containing flammable refrigerants, refrigerant purging shall be achieved by breaking the vacuum in the system with oxygen-free nitrogen and continuing to fill until the working pressure is achieved, then venting to atmosphere, and finally pulling down to a vacuum (optional for A2L). This process shall be repeated until no refrigerant is within the system (optional for A2L). When the final oxygen-free nitrogen change is used, the system shall be vented down to atmospheric pressure to enable work to take place.
- Ensure that the outlet for the vacuum pump is not close to any potential ignition sources and that ventilation is available.

**Charging procedures**

- In addition to conventional charging procedures, the following requirements shall be followed.
    a. Ensure that contamination of different refrigerants does not occur when using charging equipment. Hoses or lines shall be as short as possible to minimize the amount of refrigerant contained in them.
    b. Cylinders shall be kept in an appropriate position according to the instructions.
    c. Ensure that the REFRIGERATING SYSTEM is earthed prior to charging the system with refrigerant.
    d. Label the system when charging is complete (if not already).
    e. Extreme care shall be taken not to overfill the REFRIGERATING SYSTEM.
- Prior to recharging the system. It shall be pressure-tested with the appropriate purging gas. The system shall be lead-tested on completion of charging but prior to commissioning. A follow up leak test shall be carried out prior to leaving the site.

## Maintenance and Service Notes

**WARNING! TURN OFF CASE BEFORE PERFORMING PREVENTATIVE MAINTENANCE**

### Decommissioning

- Before carrying out this procedure, it is essential that the technician is completely familiar with the equipment and all its detail. It is recommended good practice that all refrigerants are recovered safely. Prior to the task being carried out, an oil and refrigerant sample shall be taken in case analysis is required prior to re-use of recovered refrigerant. It is essential that electrical power is available before the task is commenced.
    a. Become familiar with the equipment and its operation.
    b. Isolate the system electrically.
    c. Before attempting the procedure, ensure that:
        i. Mechanical handling equipment is available, if required, for handling refrigerant cylinders;
        ii. All personal protective equipment is available and being used correctly;
        iii. The recovery process is supervised at all times by a competent person;
        iv. Recovery equipment and cylinders conform to the appropriate standards.
    d. Pump down refrigerant system, if possible.
    e. If a vacuum is not possible, make a manifold so that refrigerant can be removed from various parts of the system.
    f. Make sure that cylinder is situated on the scales before recovery takes place.
    g. Start the recovery machine and operate in accordance with instructions.
    h. Do not overfill cylinders (no more than 80% volume liquid charge).
    i. Do not exceed the maximum working pressure of the cylinder, even temporarily.
    j. When the cylinders have been filled correctly and the process completed, make sure that the cylinders and the equipment are removed from the site properly and all isolation valves on the equipment are closed off.
    k. Recovered refrigerant shall not be charged into another refrigerating system unless it has been cleaned and checked.
- Equipment shall be labeled stating that it has been de-commissioned and emptied of refrigerant. The label shall be dated and signed. For appliances containing flammable refrigerants, ensure that there are labels on the equipment stating the equipment contains flammable refrigerant.

## Maintenance and Service Notes

**WARNING! TURN OFF CASE BEFORE PERFORMING PREVENTATIVE MAINTENANCE**

**Recovery**

- When removing refrigerant from a system, either for servicing or decommissioning, it is recommended good practice that all refrigerants are removed safely.
- When transferring refrigerant into cylinders, ensure that only appropriate refrigerant recovery cylinders are employed. Ensure that the correct number of cylinders for holding the total system charge is available. All cylinders to be used are designated for the recovered refrigerant and labeled for that refrigerant (i.e., special cylinders for the recovery of refrigerant). Cylinders shall be complete with pressure-relief valve and associated shut-off valve in good working order. Empty recovery cylinders are evacuated and, if possible, cooled before recovery occurs.
- The recovery equipment shall be in good working order with a set of instructions concerning the equipment that is at hand and shall be suitable for the recovery of all appropriate refrigerants including, when applicable, FLAMMABLE REFRIGERANTS. In addition, a set of calibrated weighing scales shall be available and in good working order. Hoses shall be complete with leak-free disconnect coupling and in good condition. Before using the recovery machine, check that it is in satisfactory working order, has been properly maintained and that any associated electrical components are sealed to prevent ignition in the event of refrigerant release. Consult manufacturer if in doubt.
- The recovered refrigerant shall be returned to the refrigerant supplier in the correct recovery cylinder, and the relevant waste transfer note arranged. Do not mix refrigerants in recovery units and especially not in cylinders.
- If compressors or compressor oils are to be removed, ensure that they have been evacuated to an acceptable level to make certain that FLAMMABLE REFRIGERANT does not remain within the lubricant. The evacuation process shall be carried out prior to returning the compressor to the suppliers. Only electric heating to the compressor body shall be employed to accelerate this process. When oil is drained from a system, it shall be carried out safely.

## Serial Label Location & Information Listed / Technical Information & Service

Serial labels are affixed at various places (on the header, near the thermostat, at the case rear, behind panels/toe-kicks, on electrical boxes, etc.).

Serial labels contain electrical, temperature and refrigeration information, and regulatory standards to which the case conforms.

Sample serial label is shown below.

For additional technical information and service, see the TECHNICAL SERVICE page in this manual for instructions on contacting Structural Concepts' Technical Service Department.

This disclosure statement has been reviewed and approved by Structural Concepts, and Structural Concepts attests, under penalty of perjury, that these statements are true and accurate.

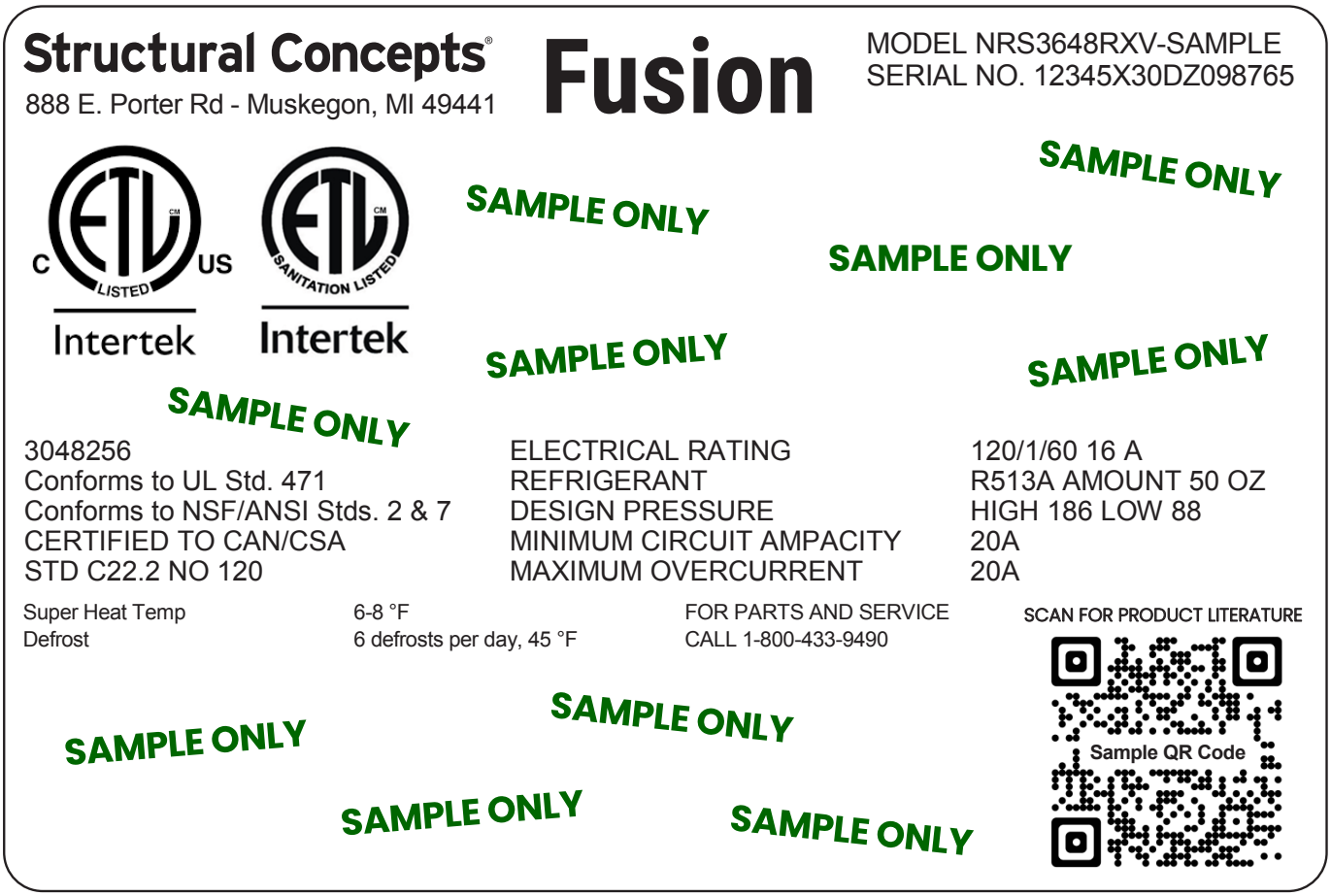


Sample Serial Label For Refrigerated Cases

# Programmable Controller (Select, Click On or Scan Qr Code for Information)

Determine which programmable controller is on your case (Controllers that Structural Concepts commonly use are shown below). Your particular programmable controller may differ.

Carel® PJEZ Platform

Carel® ir33 Platform

Carel® iJF Platform

Dixell® XM670K-XM679K Platform

To access information about the programmable controller that is used on your case, follow these instructions:

> If viewing this document on a smartphone, a tablet, or computer, select/click on the QR code on the left.
>
> If viewing this document in print (hard copy), scan the QR code on the left with your smartphone or tablet.

# Structural Concepts Technical Service Contact Information & Limited Warranty

## Contact Information

**Web:** structuralconcepts.com/support

**Tech Service/Warranty:** 1 (800) 433-9490, EXT. 1

**Hours Available:** Monday – Friday, 8am to 8pm EST (Closed holidays)

Before contacting, you must have the following: serial number / model number / store number / store address / details (photos, leak locations, damage, store's ambient conditions, etc.)

### To access the limited warranty to your case, follow these instructions:

If viewing this document on a smartphone, tablet, or computer, select/click on the QR code on the left.

If viewing this document in print (hard copy), scan the QR code on the left with your smartphone or tablet.