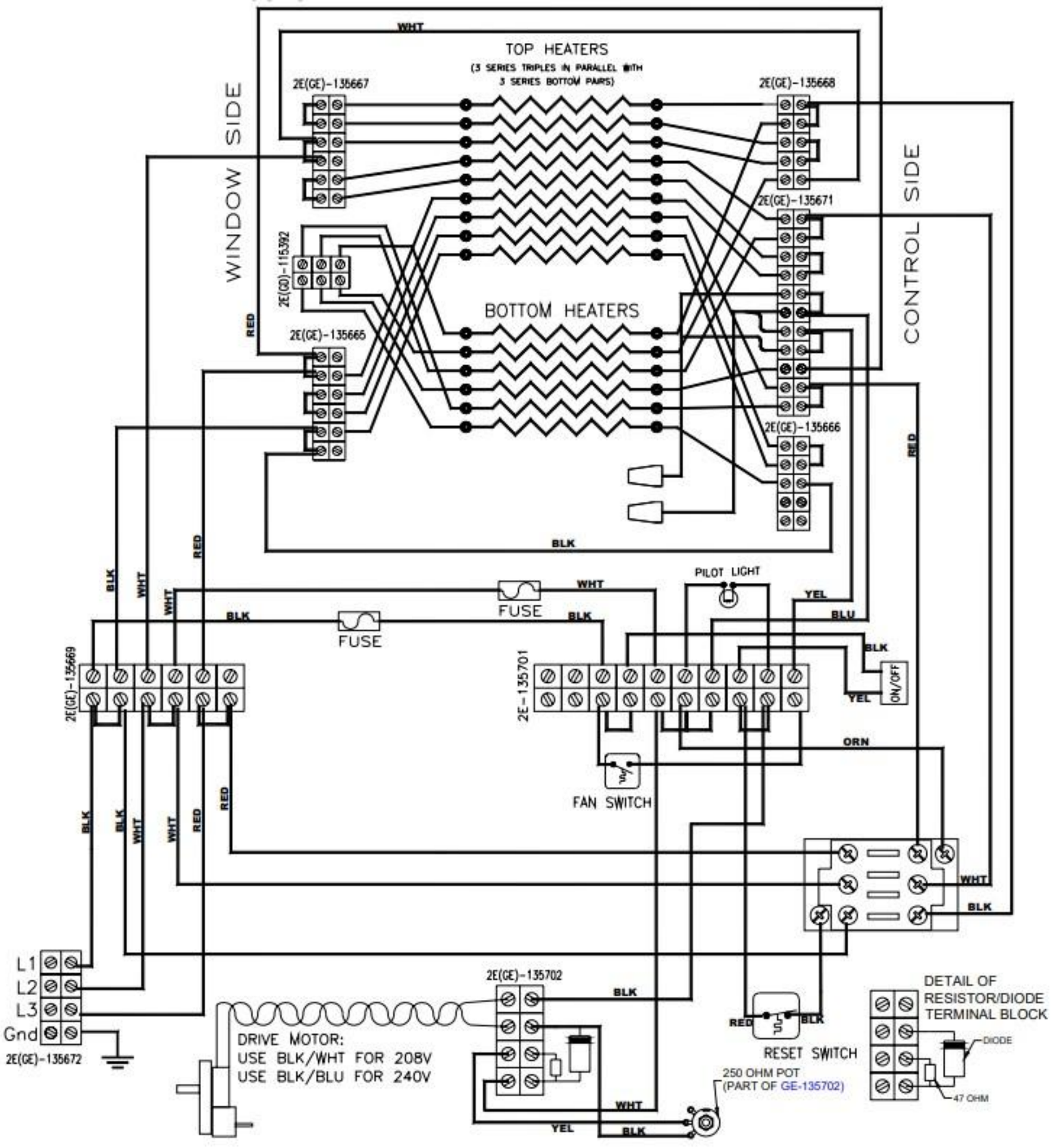
TOP HEATERS
(3 SERIES TRIPLES IN PARALLEL WITH
3 SERIES BOTTOM PAIRS)
2E(GE)-135667
2E(GE)-135668
2E(GE)-135671
2E(GE)-135666
2E(GE)-135665
2E(GE)-115392
BOTTOM HEATERS
WINDOW SIDE
CONTROL SIDE
WHT
RED
BLK
FUSE
FUSE
PILOT LIGHT
YEL
BLU
ON/OFF
2E(GE)-135669
2E-135701
ORN
FAN SWITCH
L1
L2
L3
Gnd
2E(GE)-135672
2E(GE)-135702
DRIVE MOTOR:
USE BLK/WHT FOR 208V
USE BLK/BLU FOR 240V
RESET SWITCH
250 OHM POT
(PART OF GE-135702)
DETAIL OF
RESISTOR/DIODE
TERMINAL BLOCK
DIODE
47 OHM

QT14 W/ POT SPEED CONTROL
SINGLE PHASE - 208/220/240

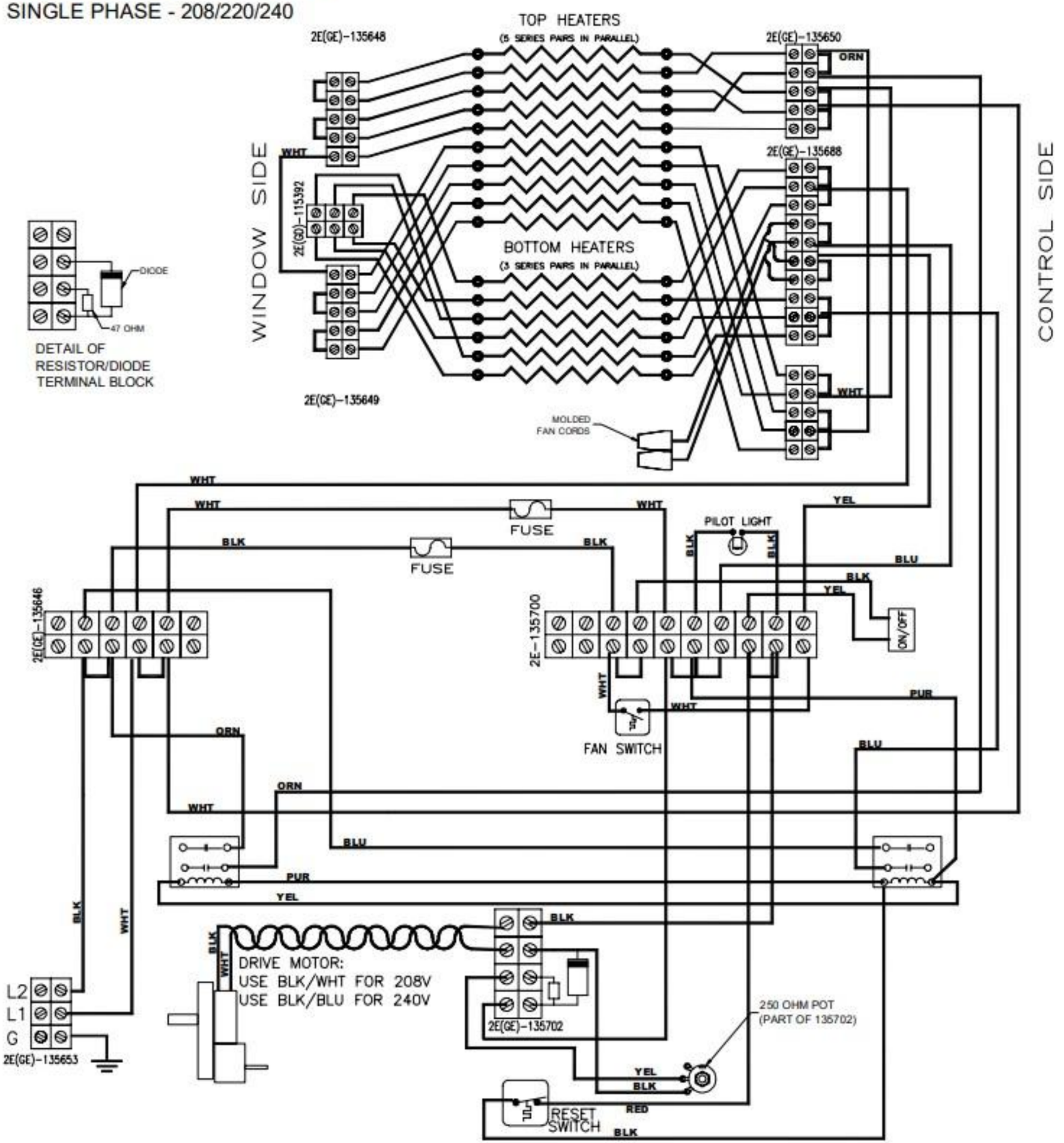

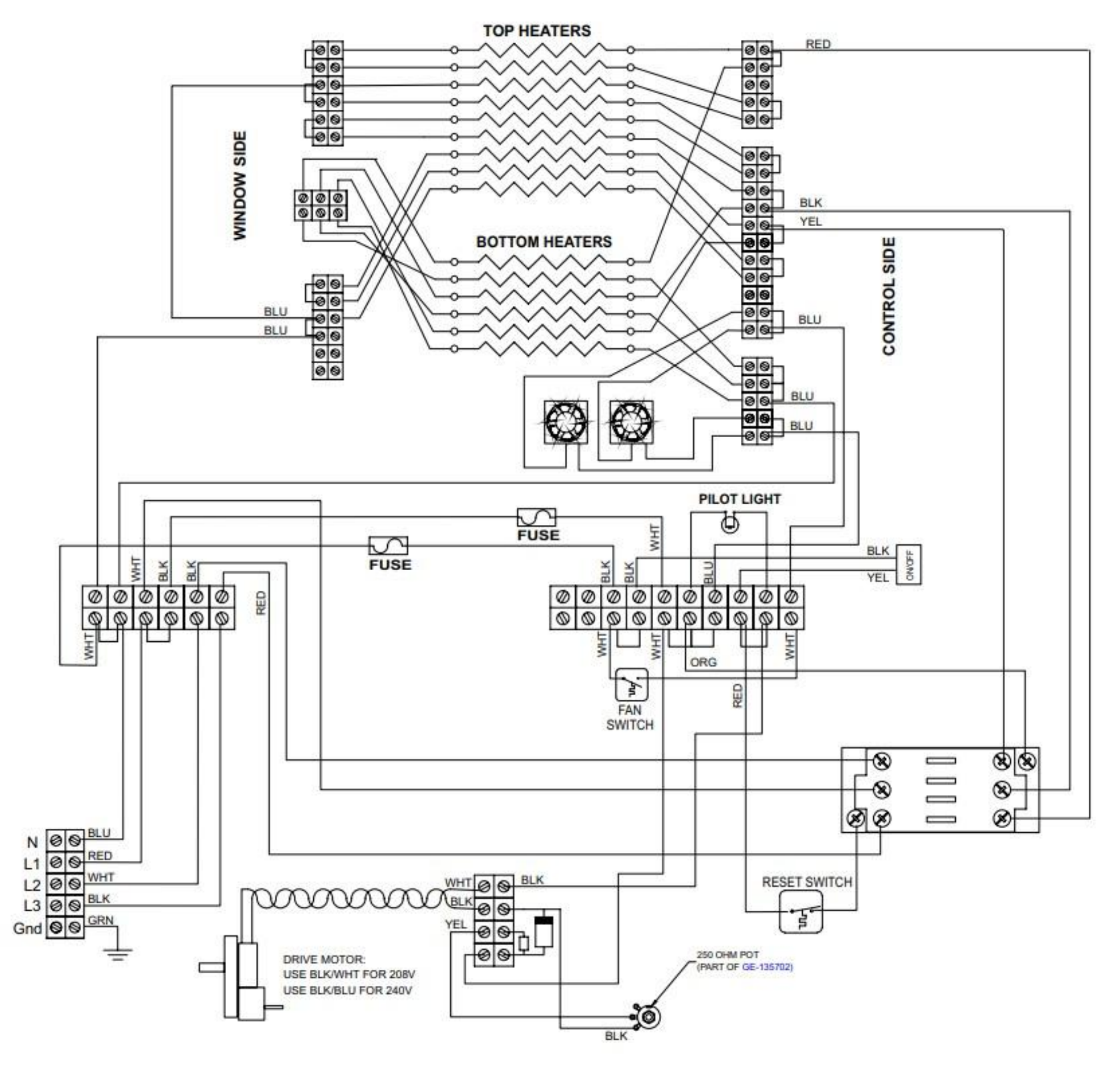
TOP HEATERS
RED
WINDOW SIDE
BLK
YEL
BOTTOM HEATERS
CONTROL SIDE
BLU
BLU
BLU
BLU
BLU
PILOT LIGHT
FUSE
FUSE
WHT
BLK
BLK
WHT
BLK
BLK
BLU
BLK
YEL
ON/OFF
RED
WHT
WHT
WHT
WHT
ORG
RED
FAN
SWITCH
N
L1
L2
L3
Gnd
BLU
RED
WHT
BLK
GRN
WHT
BLK
YEL
BLK
RESET SWITCH
DRIVE MOTOR:
USE BLK/WHT FOR 208V
USE BLK/BLU FOR 240V
250 OHM POT
(PART OF GE-135702)
BLK