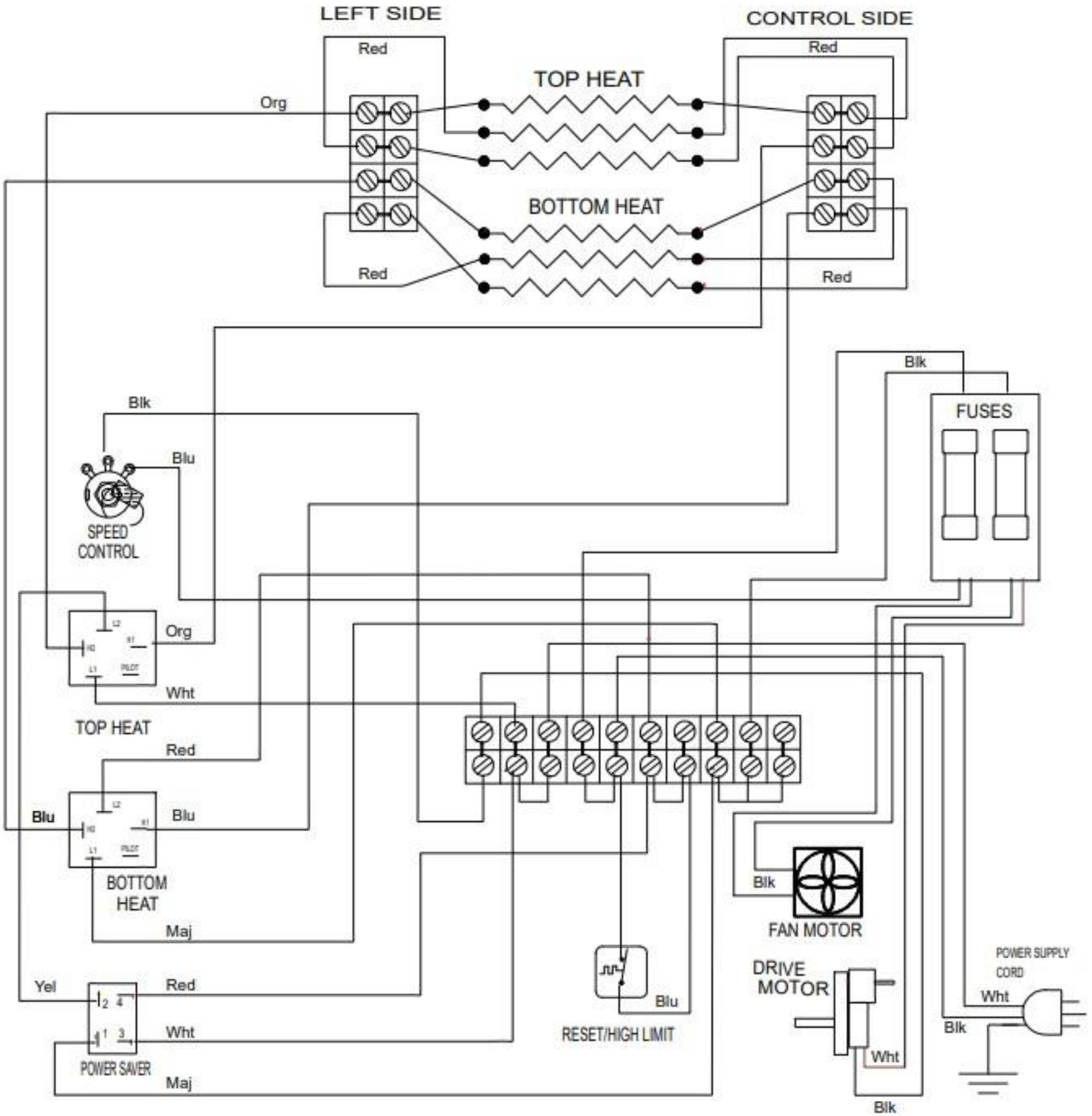
LEFT SIDE
CONTROL SIDE
Red
Red
TOP HEAT
Org
BOTTOM HEAT
Red
Red
Blk
Blk
FUSES
Blu
SPEED CONTROL
Org
Wht
TOP HEAT
Red
Blu
Blu
BOTTOM HEAT
Maj
Blk
FAN MOTOR
Yel
Red
Wht
POWER SAVER
Maj
Blu
RESET/HIGH LIMIT
DRIVE MOTOR
Wht
Blk
POWER SUPPLY CORD
Wht
Blk

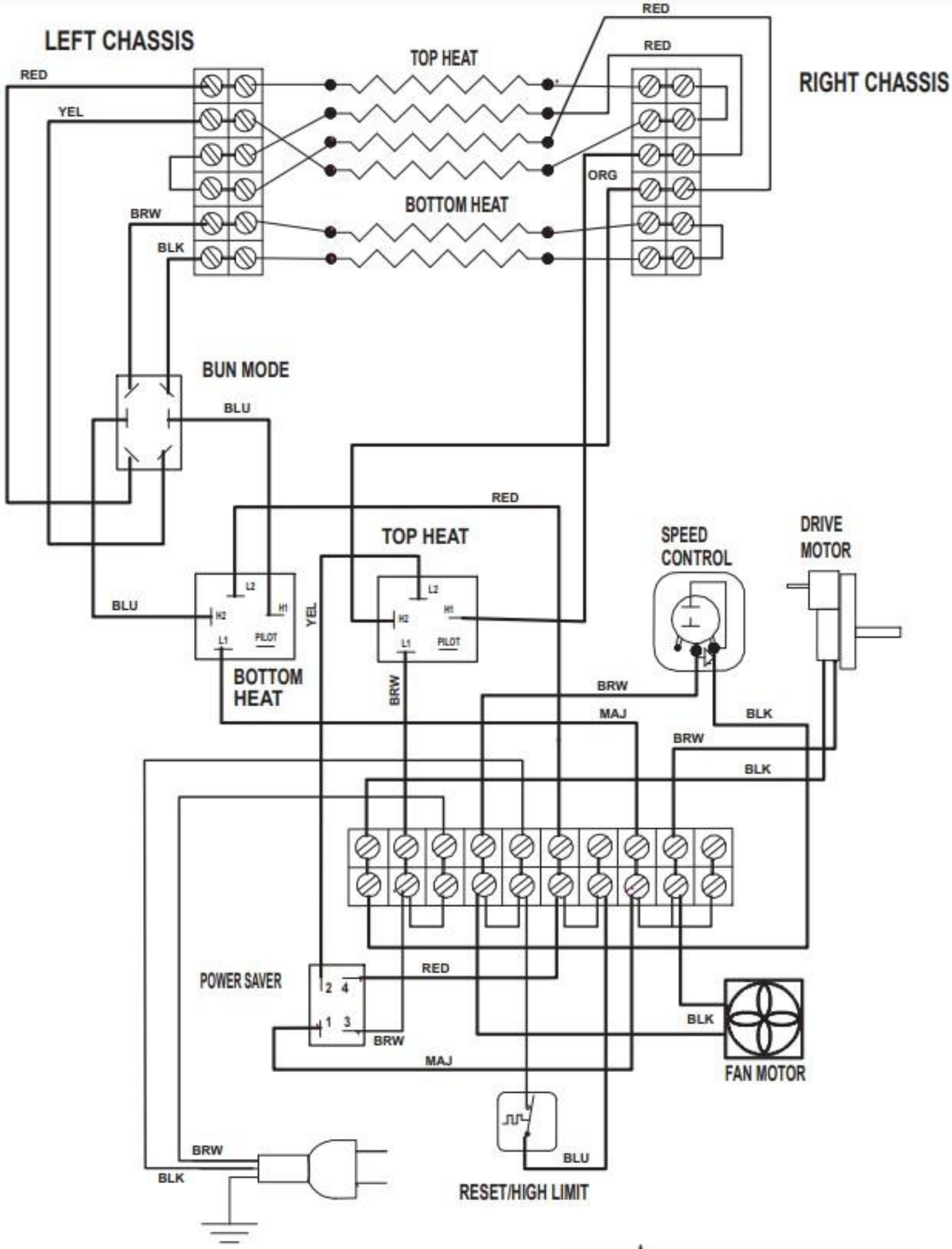
LEFT CHASSIS
RIGHT CHASSIS
TOP HEAT
BOTTOM HEAT
RED
YEL
BRW
BLK
ORG
BUN MODE
BLU
TOP HEAT
BOTTOM HEAT
L2
H2
H1
L1
PILOT
YEL
BRW
MAJ
SPEED CONTROL
DRIVE MOTOR
POWER SAVER
2 4
1 3
FAN MOTOR
RESET/HIGH LIMIT

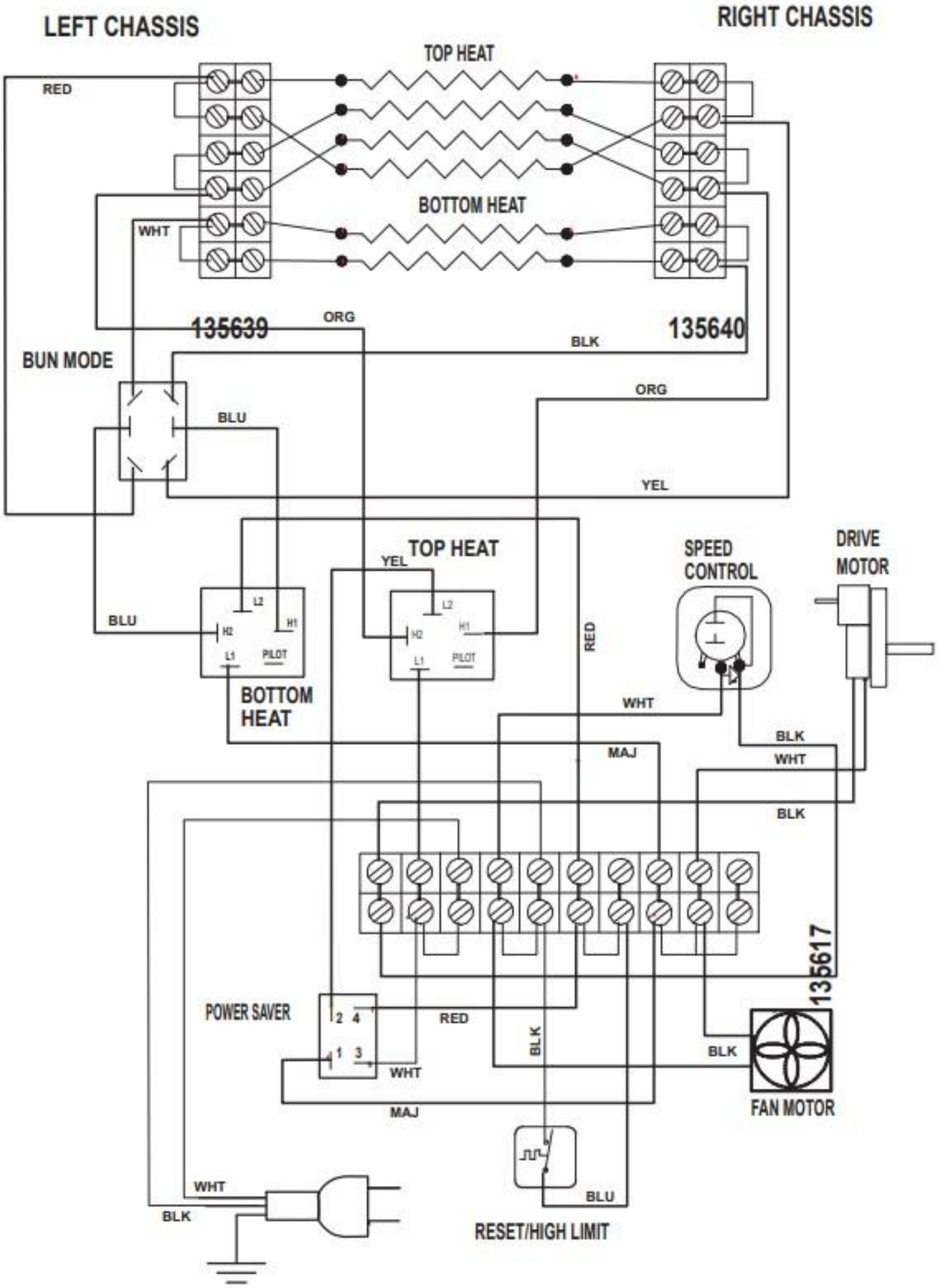
LEFT CHASSIS
RIGHT CHASSIS
TOP HEAT
RED
BOTTOM HEAT
WHT
135639
ORG
135640
BLK
BUN MODE
ORG
BLU
YEL
TOP HEAT
YEL
SPEED CONTROL
DRIVE MOTOR
L2
H1
H2
L1
PILOT
BLU
RED
BOTTOM HEAT
WHT
BLK
MAJ
WHT
BLK
135617
POWER SAVER
2 4
1 3
RED
BLK
BLK
WHT
MAJ
FAN MOTOR
WHT
BLK
BLU
RESET/HIGH LIMIT