SLOAN® SLOAN SOLIS®

Code No. 0816641
Rev. 8 (04/21)

INSTALLATION INSTRUCTIONS FOR RETROFIT AND COMPLETE VALVE INSTALLATION FOR SLOAN SOLIS®, SOLAR POWERED, SINGLE AND DUAL FLUSH WATER CLOSETS AND URINALS

Reducing Your Water Footprint.™

HET HIGH-EFFICIENCY TOILET

HEU HIGH-EFFICIENCY URINAL

8100 Series Complete Flushometer Models

8100 Series Sloan SOLIS® Valves are complete Flushometer Valves and ideal for new installations.

RESS Series Retrofit Conversion Kit Models

RESS Sloan SOLIS® models are used to convert existing Flushometers to Solar Powered, Sensor Activated

Sloan SOLIS® Dual Flush Water Closet Models can be furnished for the following:

1.1 gpf/4.2 Lpf	Reduced Flush
1.6 gpf/6.0 Lpf (Full Flush)	For Low Consumption Bowls

Sloan SOLIS® Water Closet Models can be furnished for the following:

1.28 gpf/4.7 Lpf	High Efficiency
1.1 gpf/4.2 Lpf	High Efficiency

Sloan SOLIS® Urinal Models can be furnished for the following:

0.125 gpf/0.5 Lpf	High Efficiency
0.25 gpf/1.0 Lpf	High Efficiency
0.5 gpf/1.9 Lpf	High Efficiency

LIMITED WARRANTY

Unless otherwise noted, Sloan Valve Company warrants this product, manufactured and sold for commercial or industrial uses, to be free from defects in material and workmanship for a period of three (3) years (one (1) year for special finishes, SF faucets, PWT electronics and 30 days for PWT software) from date of first purchase. During this period, Sloan Valve Company will, at its option, repair, replace, or refund the purchase price of any product which fails to conform with this warranty under normal use and service. This shall be the sole and exclusive remedy under this warranty. Products must be returned to Sloan Valve Company, at customer's cost. No claims will be allowed for labor, transportation or other costs. This warranty extends only to persons or organizations who purchase Sloan Valve Company's products directly from Sloan Valve Company for purpose of resale. This warranty does not cover the life of the batteries.

THERE ARE NO WARRANTIES WHICH EXTEND BEYOND THE DESCRIPTION ON THE FACE HEREOF. IN NO EVENT IS SLOAN VALVE COMPANY RESPONSIBLE FOR ANY CONSEQUENTIAL DAMAGES OF ANY MEASURE WHATSOEVER.

VALVE ROUGH-IN

Water Closet Installation

Model 8111, 8113, 8115, and 8116
Reference for RESS-C Retrofit

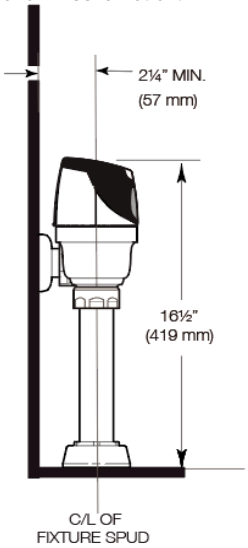

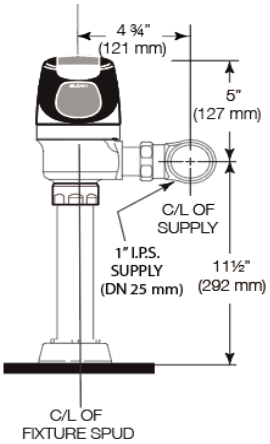

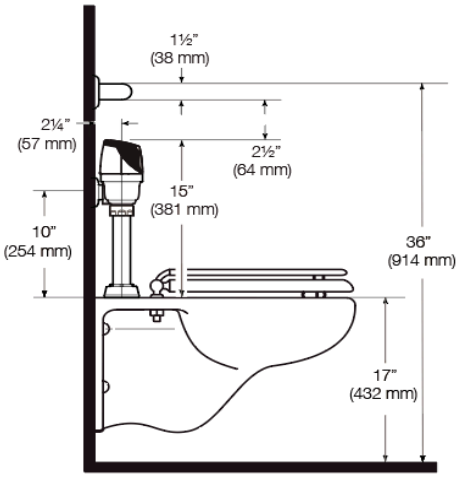

Typical Water Closet Installation

Model 8137
Reference for RESS-C Retrofit

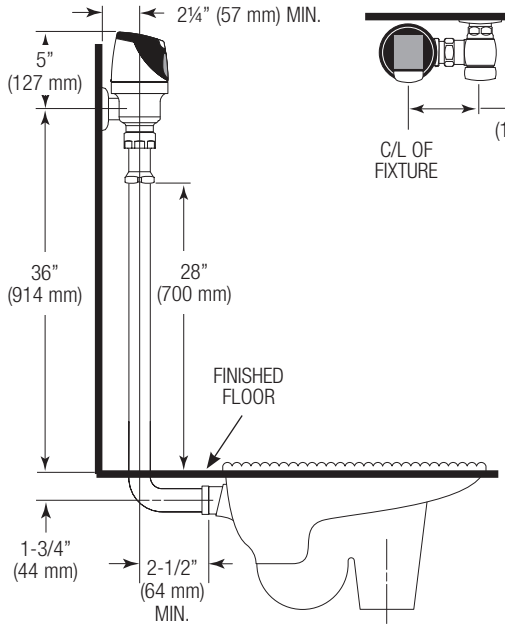

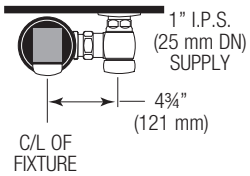

Typical Urinal Installation

Models 8186
Reference for RESS-U Retrofit

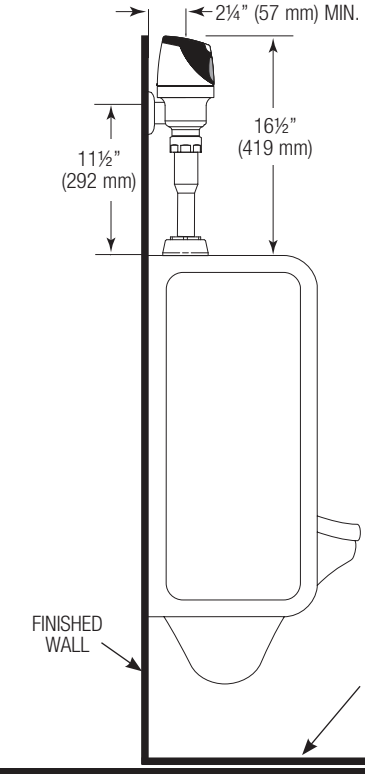

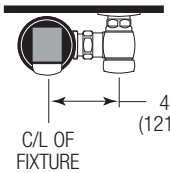

8180
1" I.P.S.
(25 mm DN)
SUPPLY
8186
¾" I.P.S.
(20 mm DN)
SUPPLY
4¾"
(121 mm)

ALTERNATIVE WATER CLOSET INSTALLATION

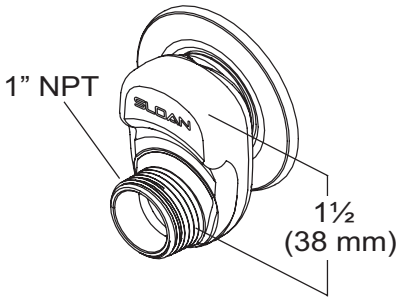

When installing the Sloan SOLIS® Electronic Flushometer in an ADA compliant stall: Per ADA Guidelines (section 604.9.4) it is recommended that the grab bars be split or shifted to the wide side of the stall. For alternative installations, lower water supply rough-in to 10" (254 mm), or use the H-1018-A 1-1/2" offset adapter (not supplied) to lower the overall height. The Sloan H-1018-A 1" NPT x 1-1/2" offset adapter kit (sold separately) is designed to lower a SOLIS® Flushometer 1-1/2" when the space above the top of the Flushometer conflicts with grab bar clearance. Mount the grab bar at the 36" (914 mm) maximum allowed height (top of grab bar at 36").

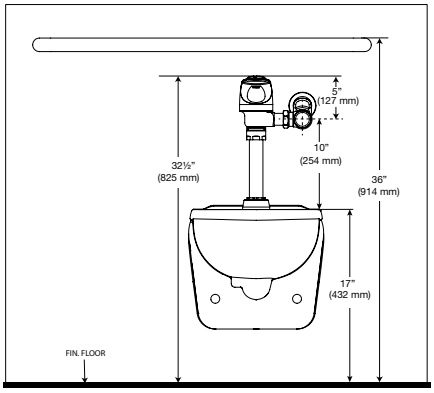

!!! IMPORTANT !!!

WITH THE EXCEPTION OF CONTROL STOP INLET, DO NOT USE PIPE SEALANT OR PLUMBING GREASE ON ANY VALVE COMPONENT OR COUPLING!

!!! IMPORTANT !!!

NEVER OPEN CONTROL STOP TO WHERE THE FLOW FROM THE VALVE EXCEEDS THE FLOW CAPABILITY OF THE FIXTURE. IN THE EVENT OF A VALVE FAILURE, THE FIXTURE MUST BE ABLE TO ACCOMMODATE A CONTINUOUS FLOW FROM THE VALVE.

!!! IMPORTANT !!!

PROTECT THE CHROME OR SPECIAL FINISH OF SLOAN FLUSHOMETERS — DO NOT USE TOOTHED TOOLS TO INSTALL OR SERVICE THESE VALVES. USE A SLOAN A-50 SUPER-WRENCH™, SLOAN A-109 PLIER WRENCH OR SMOOTH JAWED SPUD WRENCH TO SECURE ALL COUPLINGS. ALSO SEE "CARE AND CLEANING" SECTION

!!! IMPORTANT !!!

THE STRAP WRENCH PROVIDED WITH SLOAN SOLIS® IS A CONVENIENCE TOOL AND IS NOT TO BE USED TO REMOVE OR INSTALL THE FLUSHOMETER COUPLINGS. USE STRAP WRENCH ONLY TO INSTALL SLOAN SOLIS® LOCKING RING.

!!! IMPORTANT !!!

THIS PRODUCT CONTAINS MECHANICAL AND/OR ELECTRICAL COMPONENTS THAT ARE SUBJECT TO NORMAL WEAR. THESE COMPONENTS SHOULD BE CHECKED ON A REGULAR BASIS AND REPLACED AS NEEDED TO MAINTAIN THE VALVE'S PERFORMANCE.

When further assistance is required, please consult your local Sloan Representative or call Sloan Technical Support at: 1-888-SLOAN-14 (1-888-756-2614) or visit us online at: www.sloanvalve.com

PRIOR TO INSTALLING THE SLOAN SOLIS® FLUSHOMETER

Prior to installing the Sloan SOLIS® Flushometer, install the items listed below as illustrated in the Rough-in Diagram. (New installations only.)

- HET Closet or HEU Urinal fixture
- Drain line
- Water supply line

IMPORTANT:

- **INSTALL ALL PLUMBING IN ACCORDANCE WITH APPLICABLE CODES AND REGULATIONS.**
- **WATER SUPPLY LINES MUST BE SIZED TO PROVIDE AN ADEQUATE VOLUME OF WATER FOR EACH FIXTURE.**
- **WHEN INSTALLING A FLUSHOMETER, IT IS IMPORTANT THAT THE FLUSH MODEL MATCHES THE REQUIREMENTS OF THE PLUMBING FIXTURE.**
- **FLUSH ALL WATER LINES PRIOR TO MAKING CONNECTIONS.**

The Sloan SOLIS® is designed to operate with 15 to 80 PSI (103 to 552 kPa) of water pressure. **THE MINIMUM PRESSURE REQUIRED TO THE VALVE IS DETERMINED BY THE TYPE OF FIXTURE SELECTED.** Consult fixture manufacturer for pressure requirements.

Most High Efficiency water closets require a minimum flowing pressure of 25 psi (172 kPa). Many building codes and the ASME A112.19.2 fixture standard list maximum static water pressure as 80 PSI (552 kPa).

TOOLS REQUIRED FOR INSTALLATION

- Slotted screwdriver to adjust control stop.
- Sloan A-50 Super-Wrench™, Sloan A-109 Plier Wrench or smooth jawed spud wrench for couplings.
- Strap wrench (supplied) to install Sloan SOLIS® to valve body.
- 7/64" hex wrench (supplied) to secure Sloan SOLIS® cover to base plate.
- 5/64" hex wrench to secure water Supply Flange.

1 - FOR COMPLETE VALVE INSTALLATION, START HERE. FOR RESS RETROFIT INSTALLATION, START AT STEP 6. INSTALL OPTIONAL SWEAT SOLDER ADAPTER (ONLY IF YOUR SUPPLY PIPE DOES NOT HAVE A MALE THREAD)

A Measure from finished wall to C/L of Fixture Spud. Cut pipe 1¼" (32 mm) shorter than this measurement. Chamfer O.D. and I.D. of water supply pipe.

B Slide Threaded Adapter fully onto pipe.

C Sweat solder the Adapter to pipe.

!!! IMPORTANT !!!

WITH THE EXCEPTION OF CONTROL STOP INLET, DO NOT USE PIPE SEALANT OR PLUMBING GREASE ON ANY VALVE COMPONENT OR COUPLING!

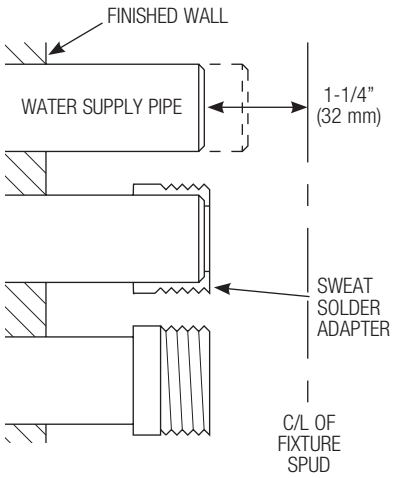

2 - INSTALL COVER TUBE, WALL FLANGE AND CONTROL STOP TO SUPPLY PIPE

A Measure from finished wall to first thread of Adapter or threaded supply pipe (dimension "X"). Cut Cover Tube to this length.

B Slide Cover Tube over pipe. Slide Wall Flange over Cover Tube until against wall.

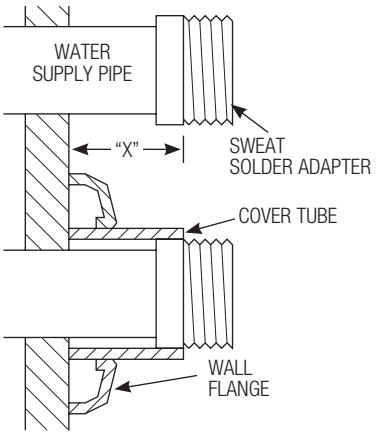

C Thread Control Stop onto pipe. Tighten with a wrench.

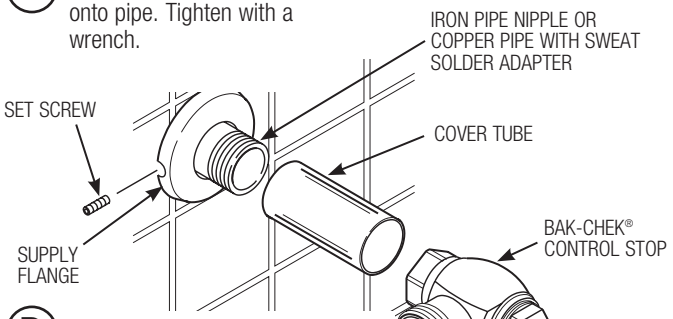

D Tighten Set Screw with a 5/64" hex wrench. **DO NOT** install Vandal Resistant Stop Cap at this time.

3 - FLUSH OUT SUPPLY LINE

A Open Control Stop.

CLOCKWISE CLOSES CONTROL STOP

COUNTERCLOCKWISE OPENS CONTROL STOP

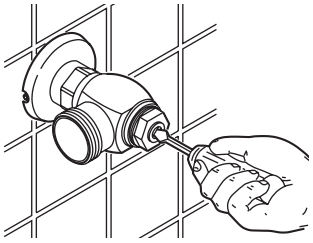

B Turn on water supply to flush line of any debris or sediment.

C Close Control Stop.

4 - INSTALL VACUUM BREAKER FLUSH CONNECTION

NOTE

If cutting Vacuum Breaker Tube to size, note that Critical Line (C/L) on Vacuum Breaker must typically be 6" (152 mm) above fixture. Consult Code for details.

A Slide Spud Coupling, Nylon Slip Gasket, Rubber Gasket and Spud Flange over Vacuum Breaker Tube.

B Insert Tube into Fixture Spud.

C Hand tighten Spud Coupling onto Fixture Spud.

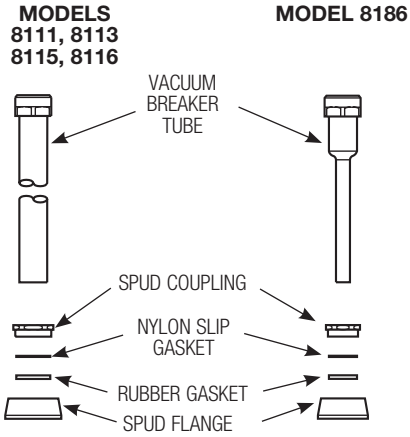

5 - INSTALL FLUSHOMETER

A Lubricate tailpiece o-ring with water. Insert adjustable tailpiece into control stop. Tighten tailpiece coupling by hand.

B Align flushometer directly above the vacuum breaker flush connection by sliding the flushometer body IN or OUT as needed. Tighten vacuum breaker coupling by hand.

C Align flushometer body and securely tighten first the tailpiece coupling (1), then the vacuum breaker coupling **(2)**, and finally the spud coupling **(3)**. Use a wrench to tighten these couplings in the order shown.

NOTE

MAXIMUM ADJUSTMENT OF THE SLOAN ADJUSTABLE TAILPIECE IS ½" (13 MM) IN OR OUT FROM THE STANDARD 4¾" (121 MM) (CENTERLINE OF FLUSHOMETER TO CENTERLINE OF CONTROL STOP).

IF ROUGHING-IN MEASUREMENT EXCEEDS 5¼" (133 MM), CONSULT FACTORY FOR LONGER TAILPIECE.

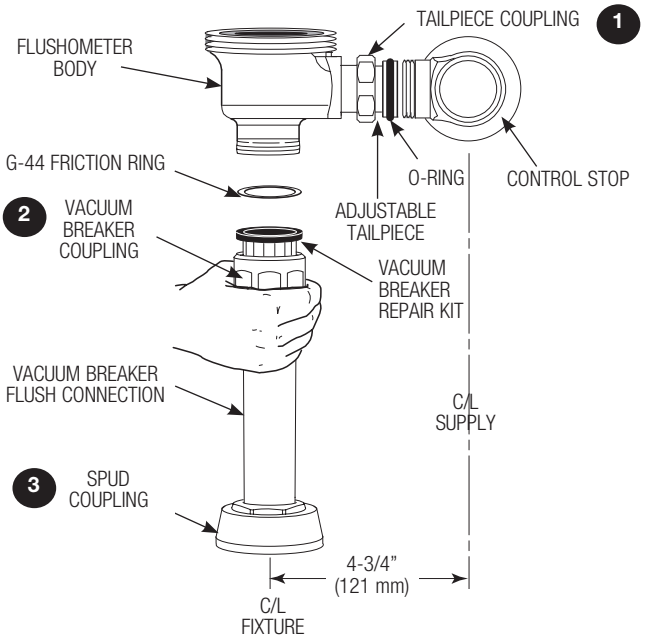

6 - WHEN RETROFITTING AN EXISTING VALVE, START HERE. REMOVE COMPONENTS FROM EXISITING FLUSHOMETER (RESS RETROFIT INSTALLATIONS ONLY)

A Remove Control Stop Cap.

B Turn off water supply at Control Stop. Push Valve Handle to relieve water pressure.

C Remove Outside and Inside Covers and old Inside Parts Kit.

D Remove old Handle Assembly and Gasket.

E Install Chrome Handle Cap with Gasket to handle opening on Flushometer Body. Tighten Chrome Handle Cap securely.

NOTE: An extra H-553 Tail O-ring is included in the event leakage occurs if the valve is repositioned during the installation of the new Sloan SOLIS®. Use only as needed.

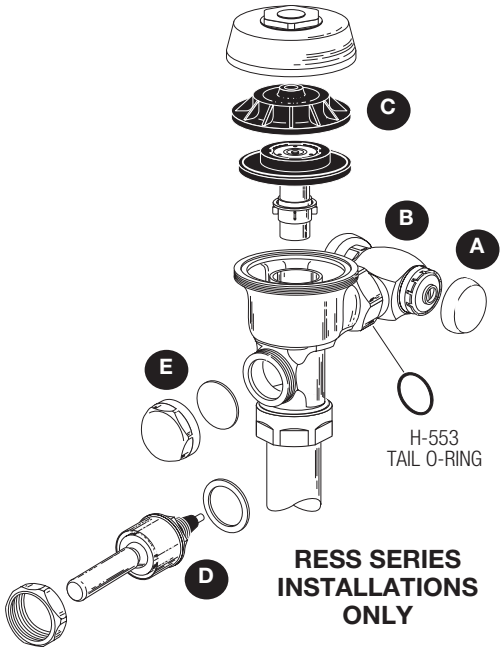

7 - SLOAN SOLIS® FLUSH VOLUME (RESS RETROFIT INSTALLATIONS ONLY)

The flush volume of the Sloan SOLIS® is controlled by the Regulator in the Flex Tube Diaphragm Kit. Regulators are identified by the color.

When installing a new Regulator on a Flex Tube Diaphragm Kit, be sure to push the Regulator past the O-ring when installing.

Note: Never use more water than needed. High Efficiency water closets and urinals will not function properly on excess water.

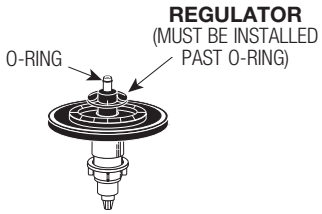

8 - ASSEMBLE FLEX TUBE DIAPHRAGM TO SLOAN SOLIS ELECTRONIC ASSEMBLY

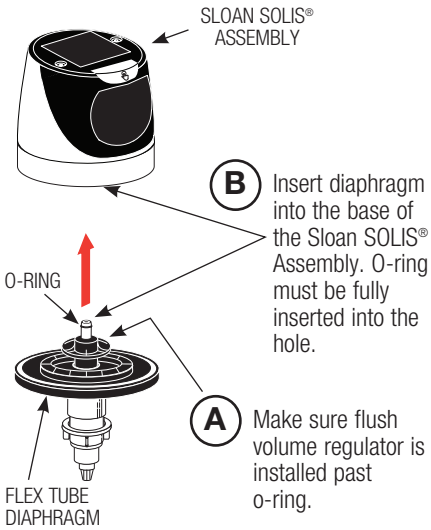

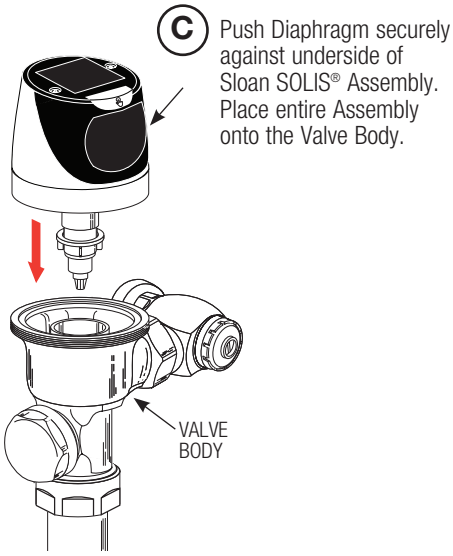

To facilitate installation, wet the diaphragm assembly (on top or completely).

NOTE: SENSOR LENS MUST FACE DIRECTLY FORWARD. ROTATING THE SENSOR TO EITHER SIDE WILL DECREASE THE SENSOR'S ABILITY TO DETECT A TARGET.

9 - TIGHTEN LOCKING RING

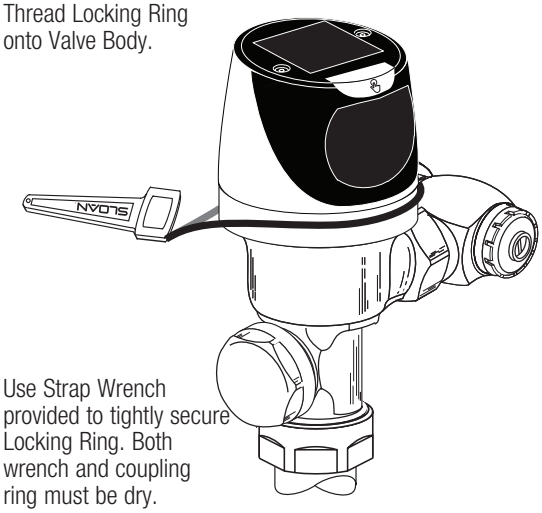

A Thread Locking Ring onto Valve Body.

B Use Strap Wrench provided to tightly secure Locking Ring. Both wrench and coupling ring must be dry.

!!! IMPORTANT !!!

THE LOCKING RING MUST BE INSTALLED DOWN PAST THE VALVE BODY THREADS BY AT LEAST ONE THREAD. IF DIFFICULTY IS EXPERIENCED INSTALLING THE LOCKING RING, TURN THE LOCKING RING BACK AND FORTH, EACH TIME WORKING IT FURTHER DOWN THE THREADS. THE LOCKING RING WILL ACT AS A THREAD CHASER IN THE EVENT THERE HAS BEEN A BUILD-UP OF MATTER ON THE THREADS OF THE OLD VALVE BODY.

IF RETROFITTING THE SLOAN SOLIS® ONTO A † ZURN VALVE BODY, A SPECIAL LOCKING RING MUST BE USED (IDENTIFIED BY A MACHINED GROOVE AROUND THE RING).
ORDER THE SLOAN SOLIS® WITH THE "Z" VARIATION TO RECEIVE THE UNIT SUPPLIED WITH THIS RING.

10 - REMOVE TAPE FROM SOLAR PANEL AND SENSOR WINDOW TO ACTIVATE

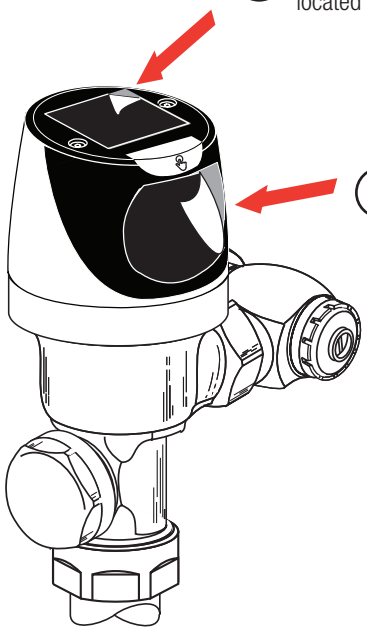

A Remove the Tape located over Solar Panel.

B Remove the Tape located over Sensor Window.

C For the first ten (10) minutes of operation, a Visible Light flashes in the Sensing Window of the Sloan SOLIS® Flushometer when a user is detected.

NOTE

The start-up routine will be 1 minute long and allows the sensors to adapt to the surrounding enviroment. It is VERY IMPORTANT that no non-permanent targets (i.e. persons, buckets, covers, etc) are present at this time. The start-up routine consists of a long (3 seconds) BLUE light ON, followed by slow BLUE light blinking in for 1 minute. At the end of the routine the sensor will show ONE long (2 seconds) BLUE light ON for lithium battery or TWO long (2 seconds each) BLUE light ON pulses for alkaline to complete the routine. Only at this time can the non-permanent objects be present.

† Zurn® is a registered trademark of Zurco, Inc. Use of "Zurn" is for identification purposes only and does not imply affiliation, endorsement, or association between Sloan and Zurco, Inc.

11 - TEST SENSOR ACTIVATION

The Sloan SOLIS® has a factory set sensing range:

Water Closet Models - 22” to 42” (559 mm to 1067 mm) and Urinal Models - 15” to 30” (381 mm to 762 mm)

A Test Sensor with Cover in Place.

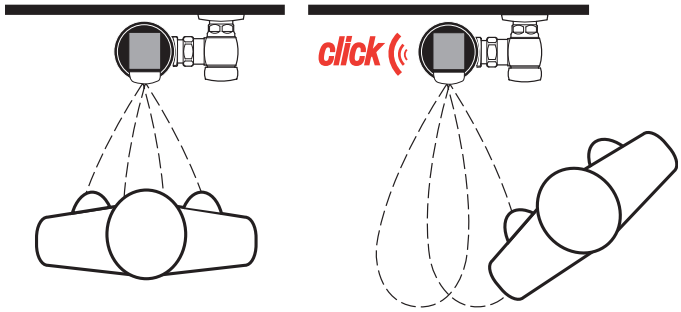

B Stand in front of Sensor for (16) seconds

C Step away from Sensor and listen for “CLICK.”

THE FACTORY SETTING SHOULD BE SATISFACTORY FOR MOST INSTALLATIONS. IF A RANGE ADJUSTMENT IS REQUIRED, REFER TO THE RANGE ADJUSTMENT INSTRUCTIONS ON THIS PAGE.

12 - ADJUST CONTROL STOP AND INSTALL VANDAL RESISTANT STOP CAP

A Open Control Stop COUNTERCLOCKWISE ½ turn from closed position.

B Activate flushometer by pressing override button.

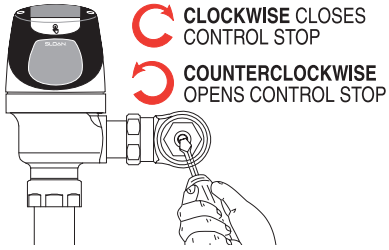

C Adjust Control Stop after each flush until the rate of flow delivered properly cleanses the fixture.

D Install Control Stop Cap onto Control Stop. For RESS retrofit applications, reuse Stop Cap from existing valve. In complete valve installations, a new Stop Cap is provided.
Follow the instructions packaged with the Free Spinning Vandal Resistant Stop Cap.

!!! IMPORTANT !!!

THE SLOAN FLUSHOMETER IS ENGINEERED FOR QUIET OPERATION. EXCESSIVE WATER FLOW CREATES NOISE, WHILE TOO LITTLE WATER FLOW MAY NOT SATISFY THE NEEDS OF THE FIXTURE. PROPER ADJUSTMENT IS MADE WHEN PLUMBING FIXTURE IS CLEANSED AFTER EACH FLUSH WITHOUT SPLASHING WATER OUT FROM THE LIP AND A QUIET FLUSHING CYCLE IS ACHIEVED.

!!! IMPORTANT !!!

THE CONTROL STOP SHOULD NEVER BE OPENED TO THE POINT WHERE THE FLOW FROM THE VALVE EXCEEDS THE FLOW CAPABILITY OF THE FIXTURE. IN THE EVENT OF A VALVE FAILURE, THE FIXTURE MUST BE ABLE TO ACCOMMODATE A CONTINUOUS FLOW FROM THE VALVE.

OPERATION

1. A continuous, INVISIBLE light beam is emitted from the Sloan SOLIS® Sensor.

2. As the user enters the beam’s effective range, 22 to 42 inches (559 mm to 1067 mm) for closet installations and 15 to 30 inches (381 mm to 762 mm) for urinal installations, the beam is reflected into the Scanner Window to activate the Output Circuit. Once activated, the Output Circuit continues in a “hold” mode for as long as the user remains within the effective range of the sensor. For Dual Flush models, if the user stays longer than 65 seconds, a full flush will automatically initiate when the user leaves. For Single Flush models, once the user steps away, a full flush will automatically initiate.

3. For Dual Flush models, once a user is detected, if the user leaves in 65 seconds or less, a reduced flush will automatically initiate. The circuit automatically resets and is ready for the next user. For Single Flush models, when the user steps away, this initiates a full flush. The circuit automatically resets and is ready for the next user.

4. In addition to the above the Sloan SOLIS® Urinal incorporates a standard deferred flushing mode feature that accommodates the high volume usage seen in stadiums or similar high attendance facilities.

CLOSET

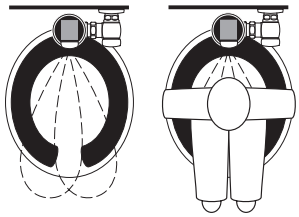

SQUAT TOILET

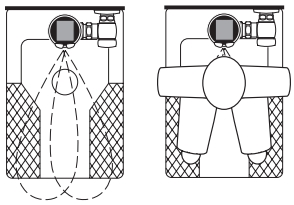

URINAL

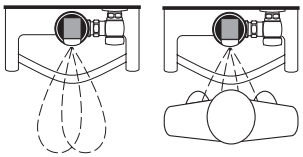

RANGE ADJUSTMENT (ADJUST ONLY IF NECESSARY)

The Sloan SOLIS® has a factory set sensing range: Water Closet Models - 22” to 42” (559 mm to 1067 mm) Urinal Models - 15” to 30” (381 mm to 762 mm)

The factory setting should be satisfactory for most installations.

Note: Water DOES NOT have to be turned off to adjust range.

RANGE ADJUSTMENT PROCEDURE For the first ten (10) minutes of operation, a visible light flashes in the sensing Window of the Sloan SOLIS® flushometer when a user is detected. This visible light feature can be reactivated after ten (10) minutes by opening and closing the battery compartment door. Check the range by stepping toward the unit until the light flashes, indicating the sensor’s maximum detection limit.

Always Determine the Sensing Range with Metal Cover and Lens Window On Top of the Unit.

To recalibrate the sensor, touch and hold the override button for 30 seconds, once the Blue LED blinks every second, and release.

Stand at desired distance, LED should blink once every 2 seconds for 30 seconds). The setting mode will run for one minute.

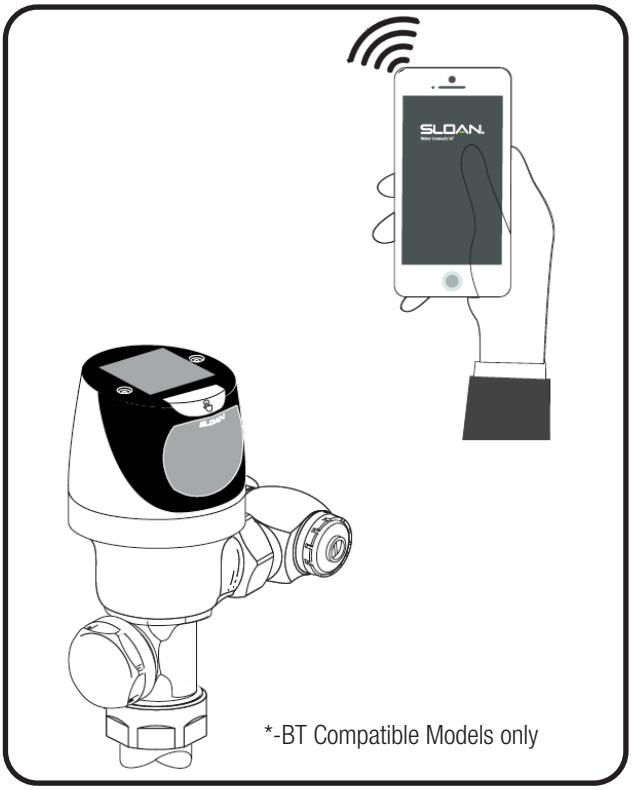

To communicate with your flushometer, wave your hand 3 times in front of sensor within 10 seconds to activate your product or press and hold the override button for 12 seconds.

NOTE: For -BT models only, to automatically check battery strength, troubleshoot, diagnose and report flushometer issues with a wireless device, use the Sloan Connect APP. The APP is available free-of-charge at the Apple iPhone APP store for iOS devices or the Google Play APP store for Android devices. For more information about the APP and its capabilities please visit Sloan.com.

BATTERY REPLACEMENT

When required, replace batteries with four (4) Alkaline AA-Size Batteries.

Note: Water DOES NOT have to be turned off to replace Batteries.

Loosen the two (2) Screws on top of unit. Remove the complete cover assembly. Lift the sensor module from its plate. Unplug the electrical connector from Battery compartment cover. Loosen the retaining screw on battery compartment cover. Remove battery Compartment cover and old batteries. Install four (4) fresh Alkaline AA-Size batteries **exactly** as illustrated.

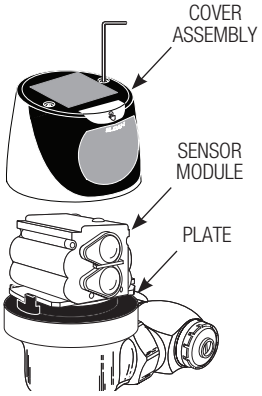

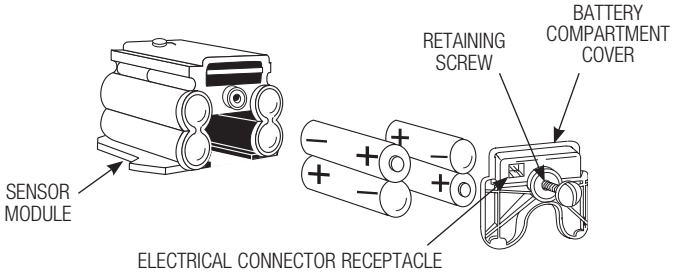

Install Battery Compartment Cover and secure with Retaining Screw. Make certain that Battery Compartment Cover is fully compressed against Gasket to provide a seal; **Do Not** overtighten. Plug the Electrical Connector into the Battery Compartment Cover. Reinstall the Sensor Module onto the Plate. Reinstall the complete Cover Assembly onto the Plate. Tighten the two (2) Screws on top of the unit.

CARE AND CLEANING

DO NOT use abrasive or chemical cleaners to clean flushometers as they may dull the luster and attack the chrome or special decorative finishes. Use ONLY soap and water, then wipe dry with clean cloth or towel.

While cleaning the bathroom tile, the flushometer should be protected from any splattering of cleaner. Acids and cleaning fluids can discolor or remove chrome plating or special finish.

TROUBLESHOOTING GUIDE

1. Sensor Flashes Continuously Only When User Steps Within Range.
A. Unit in Start-Up mode; no problem. This feature is active for the first ten (10) minutes of operation.

2. Valve Does Not Flush; Sensor Not Picking Up User.
A. Range too short; increase the range.

3. Valve Does Not Flush; Sensor Picking Up Opposite Wall or Surface, or Only Flushes When Someone Walks By. Light Flashes Continuously for First 10 Minutes Even with No One in Front of the Sensor.
A. Range too long; shorten range.

4. Valve Does Not Flush Even After Adjustment.
A. Range Adjustment Potentiometer set at full "max" or full "min" setting. Re-adjust Potentiometer away from full "max" or "min" setting.
B. Batteries completely used up; replace batteries.
C. Problem with Electronic Sensor Module; replace Electronic Sensor Module.Try swapping module with working unit to test module function.
D. Are there audible clicks from the solenoid?
NO: check for solenoid plugged into module; possibly solenoid stuck in closed position, replace solenoid.
YES: check solenoid for over-tightening, check to make sure locking ring was secured properly.
E. Module is working, and solenoid clicking, loosen and re-tighten locking ring; check diaphragm for perforations in diaphragm disc; replace.

5. Unit Flashes 4 Quick Times When User Steps Within Range.
A. Batteries low; replace batteries.

6. Valve Does Not Shut Off.
A. Bypass Orifice in Diaphragm is clogged with dirt or debris, or Bypass is clogged by an invisible gelatinous film due to "over-treated" water. Remove flex tube diaphragm and wash under running water.
NOTE: SIZE OF ORIFICE IN THE BYPASS IS OF UTMOST IMPORTANCE FOR THE PROPER METERING OF WATER BY THE VALVE. DO NOT ENLARGE OR DAMAGE THIS ORIFICE. REPLACE FLEX TUBE DIAPHRAGM IF CLEANING DOES NOT CORRECT THE PROBLEM.
B. Dirt or debris fouling stem or flex tube diaphragm. Remove flex tube diaphragm and wash under running water.
C. O-ring on stem of flex tube diaphragm is damaged or worn. Replace o-ring if necessary.
D. Problem with electronic sensor module; replace sensor module. Try swapping module with working unit to test module function
E. Are there audible clicks from the solenoid?
NO, possibly solenoid stuck open position, replace solenoid
YES, check solenoid properly screwed into inside cover, check to make sure locking ring was secured properly.
F. If module is working, and solenoid clicking, check diaphragm for perforations in diaphragm disc; replace.

7. Not Enough Water to Fixture.
A. Wrong flush volume regulator installed in flex tube diaphragm kit. Install the correct Regulator.
B. Wrong SOLIS® model installed; i.e., 1.0 gpf urinal installed on 3.5 gpf closet fixture. Replace with proper Sloan SOLIS® model.
C. Enlarged by-pass in diaphragm. Replace flex tube diaphragm.
D. Control Stop not adjusted properly. Readjust control stop.
E. Inadequate volume or pressure at supply. Increase water pressure or supply (flow) to valve. Consult factory for assistance.

8. Too Much Water to Fixture.
A. Wrong flush volume regulator installed in flex tube diaphragm Kit. Install the correct regulator.
B. Control Stop not adjusted properly. Readjust Control Stop.
C. Wrong Sloan SOLIS® model installed; i.e., 3.5 gpf Model installed on 1.0 or 1.5 gal. Urinal fixture. Replace with proper Sloan SOLIS® model.
D. Dirt in Diaphragm Bypass. Clean under running water or replace Flex Tube Diaphragm.

NOTE: THE EBV-46-A BEAM DEFLECTOR IS NOT REQUIRED OR AVAILABLE FOR THE SLOAN SOLIS®.

Note: Troubleshooting also applies to the Sloan SOLIS Urinals.

!!! IMPORTANT !!!

WHEN SERVICING SOLENOID, ROTATING LOCKING RING, SERVICING DIAPHRAGM, SERVICING VACUUM BREAKER OR SPUD, TURN OFF WATER SUPPLY AT STOP

!!! IMPORTANT !!!

LAWS AND REGULATIONS PROHIBIT THE USE OF HIGHER FLUSHING VOLUMES THAN LISTED ON FIXTURE OR FLUSHOMETER.

If further assistance is required, please contact your local Sloan Representative or Sloan Technical Support at:
1-888-SLOAN-14 (1-888-756-2614)
or visit us online at:sloan.com

NOTE: To automatically check battery strength, troubleshoot, diagnose and report flushometer issues with a wireless device, use the Sloan SmartPhone APP. The APP is available free-of-charge at the Apple iPhone APP store for iOS devices or the Google Play APP store for Android devices. For more information about the APP and its capabilities please visit Sloan.com.

RECOMMENDED WATER CLOSET WALL PLATE LOCATIONS

Centered over Flushometer

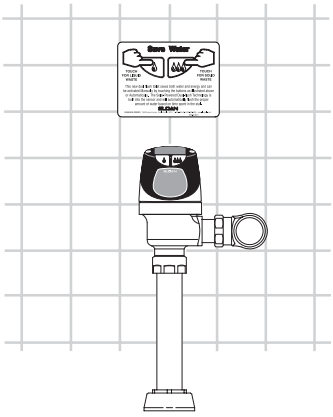

On Stall Door

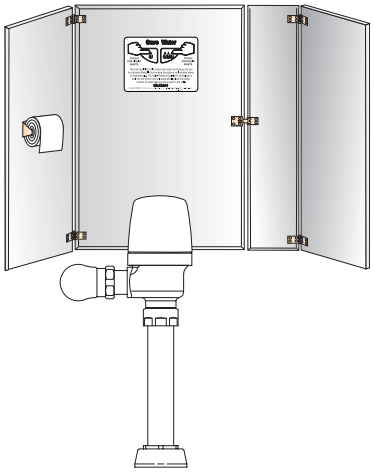

PARTS LIST

Item #	Part #	Description
Items Included with RESS Retrofit and Complete Sloan SOLIS® Valves		
1	EBV-304-A*	Cover/Sensor/Assembly - Closet SOLIS 1.6 & 1.28 gpf Electronic Single Button Flush
	EBV-379-A*	Cover/Sensor/Assembly - Closet SOLIS 1.1 gpf Electronic Single Button Flush
	WES-24-A*	Cover/Sensor/Assembly - Closet SOLIS Electronic Dual Flush
	EBV-306-A*	Cover/Sensor/Assembly - Urinal 0.5 & 1.0 gpf SOLIS Electronic Single Button
	EBV-328-A*	Cover/Sensor/Assembly - Urinal 0.25 gpf SOLIS Electronic Single Button
	EBV-325-A*	Cover/Sensor/Assembly - Urinal 0.125 gpf SOLIS Electronic Single Button
	EBV-320-A	Cover/Sensor/Assembly (†Zurn) - Closet 1.6 gpf & 1.28 gpf SOLIS Electronic Single Button
	WES-28-A	Cover/Sensor/Assembly (†Zurn) - Closet SOLIS Electronic Dual Flush
	EBV-321-A	Cover/Sensor/Assembly (†Zurn) - Urinal 0.25 gpf SOLIS Electronic Single Button
2	EBV-311-A	Cover Assembly - SOLIS Electronic Dual Flush Flush
	EBV-309-A	Cover Assembly - SOLIS Electronic Single Button Flush
3	EBV-14	Locking Ring
	EBV-30	Locking Ring - for †Zurn valves
4	EBV-312-A-C	Module - SOLIS - Water Closet Single Flush
	EBV-312-A-U	Module - SOLIS - 0.25, 0.5, & 1.0 gpf Urinal
	EBV-388-A	Module - SOLIS - 0.125 gpf Urinal
	EBV-382-A	Module - SOLIS - 1.1 gpf Single Button Flush
	WES-33-A	Module - SOLIS - Water Closet (Dual Flush)
5	EBV-134	Cover Rest Plate
6	EBV-145-A	Inside Cover Assembly (includes solenoid)
7	EBV-136-A	Solenoid
8	† †	Flex Tube Diaphragm Assembly
9	† †	Flush Volume Regulator
10	EBV-1017-A	Handle Cap (RESS Retrofit Models Only)
11	EBV-91	Range Adjustment Tool
12	EBV-22	Strap Wrench
13	EBV-137	7/64" Hex Wrench
14	WES-27	English Plate (Dual Flush only)
	WES-29	Spanish Plate (Dual Flush only)
Items Included with Complete Sloan SOLIS® Valves Only		
15	H-633-AA	1" (25 mm) Sweat Solder Kit
	H-636-AA	¾" (19 mm) Sweat Solder Kit
16	H-700-A	1" (25 mm) Bak-Chek® Control Stop
	H-700-A	¾" (19 mm) Bak-Chek® Control Stop
17	H-1010-A	Vandal Resistant Stop Cap
18	EBV-36-A	Valve Body
18A	H-1015-A	Flow Control (Not Shown) (Urinal 0.5, 0.25, 0.125 gpf Models)
19A	V-600-AA	1½" (38 mm) x 10½" (229 mm) Vacuum Breaker (Model 8111 & 8110)
	V-600-AA	1½" (38 mm) x 15" (584 mm) Vacuum Breaker (Model 8113)
	V-600-AA	1½" (38 mm) x 23" (584 mm) Vacuum Breaker (Model 8115)
	V-600-AA	1½" (38 mm) x 26" (660 mm) Vacuum Breaker (Model 8116)
19B	V-600-AA	¾" (19 mm) x 10½" (229 mm) Vacuum Breaker (Model 8186)
20A	F-5-AT	1½" Spud Coupling Assembly (Models 8110, 8111 8115 & 8116)
20B	F-5-AW	¾" Spud Coupling Assembly (Model 8186)

† † Part No. varies depending on flushometer model.

*-BT Sloan Connected Product Models available

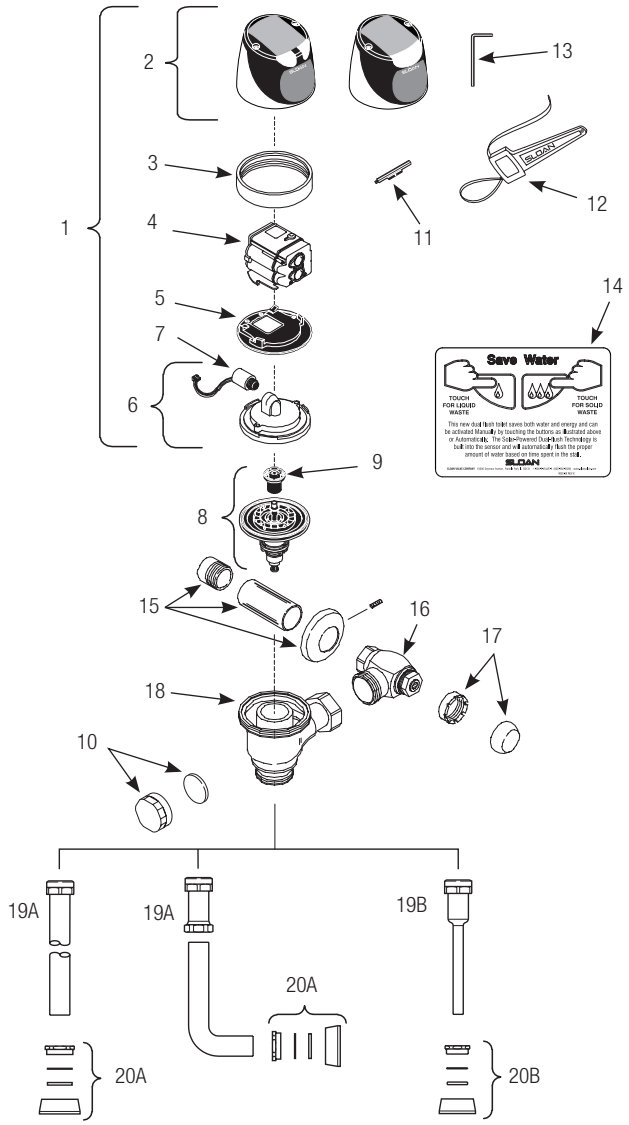

FCC INFORMATION TO USERS

This equipment has been tested and found to comply with the limits for a class B digital devices, pursuant to Part 15 of the FCC Rules. These limits are designed to provide reasonable protection against harmfull interference in a residential installation. This equipment generates, uses, and can radiate radio frequency energy and, if not installed and used in accordance with the instruction manual, may cause harmul interference to radio or television reception, which can be determined by turning the equipment off and on, the user is encouraged to try to correct the interference by one or more of the following measures:

- Reorient or relocate the receiving antenna
- Increase the separation between the equipment and receiver
- Connect the equipment into an outlet on a circuit different from that to which the receiver is connected
- Consult the dealer or an experienced radio/TV technician for help

Manufactured in the U.S.A. by Sloan Valve Company under one or more of the following patents: U.S. Patents: D598,975; D599,436; 7,124,997. Other Patents Pending. BAK-CHEK®, PARA-FLO®, PERMEX®, TURBO-FLO®.

† Zurn® is a registered trademark of Zurco, Inc. Use of "Zurn" is for identification purposes only and does not imply affiliation, endorsement, or association between Sloan and Zurco, Inc.

The information contained in this document is subject to change without notice.

SLOAN • 10500 SEYMOUR AVENUE • FRANKLIN PARK, IL 60131
Phone: 1-800-982-5839 • Fax: 1-800-447-8329 • sloan.com

© 2021 SLOAN VALVE COMPANY